Senior Center Improvements

LUISA SENIOR CENTER

1500 LUISA STREET
SANTA FE, NEW MEXICO 87505

VILLA CONSUELO SENIOR CENTER

1200 CAMINO CONSUELO STREET
SANTA FE, NEW MEXICO 87507

PASATIEMPO SENIOR CENTER

664 ALTA VISTA STREET
SANTA FE, NEW MEXICO 87505

PROJECT TEAM

Owner

CITY OF SANTA FE
Facilities Division
2651 Siringo Road, Building E
Santa Fe, NM 87504-0909

Architect of Record

AUTOTROPH, INC.
422 Greg Avenue
Santa Fe, NM 87505
Phone: (505) 216-7555 Fax (505) 888-219-2909

Design Consultants

Structural Engineering

CHAVEZ GRIEVES CONSULTING ENGINEERS, INC.
4700 Lincoln Road NE
Albuquerque, NM 87109
Phone: (505) 344-4080

Civil Engineering

ANCHOR ENGINEERING, LLC
1035 S Bosque Loop
Bosque Farms, NM 87068
Phone: (505) 362-1530

Mechanical/Plumbing, Electrical Engineering

M & E ENGINEERING, INC.
1222 Luisa Street
Santa Fe, NM 87505
Phone: (505) 983-2389

1 OCTOBER 2014

Section No.	Section	Reference Codes	Page Numbers
	List of Drawings	LD	1 to 2

ARCHITECTURAL

DIVISION 01 - GENERAL REQUIREMENTS

012300	Alternates	012300	1
012600	Contract Modification Procedures	012600	1 to 2
012900	Payment Procedures	012900	1 to 4
013100	Project Management and Coordination	013100	1 to 7
013200	Construction Progress Documentation	013200	1 to 5
013300	Submittal Procedures	013300	1 to 10
014000	Quality Requirements	014000	1 to 7
014200	References	-14200	1 to 2
015000	Temporary Facilities and Controls	015000	1 to 7
016000	Product Requirements	016000	1 to 6
017000	Execution Requirements	017300	1 to 5
017310	Cutting and Patching	017329	1 to 4
017700	Closeout Procedures	017700	1 to 5
017823	Operation and Maintenance Data	017823	1 to 6
017839	Project Record Documents	017839	1 to 3
017900	Demonstration and Training	017900	1 to 3

DIVISION 02 – EXISTING CONDITIONS

024119	Selective Demolition	024119	1 to 5

DIVISION 03 – CONCRETE

033543	Polished Concrete Finishing	033543	1 to 6
033553	Polished Concrete Topping	033553	1 to 5

DIVISION 06 – WOOD, PLASTICS AND COMPOSITES

061053	Miscellaneous Carpentry	061053	1 to 5

DIVISION 07 – THERMAL AND MOISTURE PROTECTION

072100	Thermal Insulation	072100	1 to 5
075400	Thermoplastic Membrane Roofing	075400	1 to 5
076200	Sheet Metal Flashing and Trim	076200	1 to 5
079200	Joint Sealants	079200	1 to 6

DIVISION 08 – OPENINGS

080000	Door Schedule	080000	1 to 2
081113	Hollow Metal Doors and Frames	081113	1 to 9
081416	Flush Wood Doors and Frames	081416	1 to 4
085000	Window Schedule	085000	1
085200	Wood Windows	085200	1 to 5

Section No.	Section	Reference Codes	Page Numbers
087100	Door Hardware	087100	1 to 20
087113	Automatic Door Operators	087113	1 to 7
DIVISION 09 - FINISHES			
090000	Finish Schedule	090000	1 to 2
092400	Exterior Portland Cement Plaster (Stucco)	092400	1 to 7
092900	Gypsum Board	092900	1 to 4
093013	Ceramic Tiling	093013	1 to 6
095113	Acoustic Panel Ceiling	095113	1 to 7
099000	Painting	099100	1 to 9
DIVISION 10 - SPECIALTIES			
101423	Signs	101423	1 to 3
102113	Plastic Laminate Clad Toilet Compartments	102113	1 to 4
102800	Toilet Accessories	102800	1 to 2
DIVISION 11 - EQUIPMENT			
113100	Appliances	113100	1 to 3
DIVISION 12 - FURNISHINGS			
122416	Cellular Shades	122416	1 to 3
DIVISION 31 – EARTHWORK			
313116	Termite Control	313116	1 to 3
DIVISION 22 - PLUMBING			
22 05 00	Basic Plumbing Materials and Methods	22 05 00	1 to 5
22 07 19	Plumbing Piping Insulation	22 07 19	1 to 3
22 10 05	Plumbing Piping	22 10 05	1 to 8
22 40 00	Plumbing Fixtures	22 40 00	1 to 2
DIVISION 23 - HEATING, VENTILATING, AND AIRCONDITIONING (HVAC)			
23 05 00	Basic Mechanical Materials and Methods	23 05 00	1 to 5
23 05 93	Testing, Adjusting, and Balancing for HVAC	23 05 93	1 to 5
23 07 00	Mechanical Insulation	23 07 00	1 to 3
23 07 13	Duct Insulation	23 07 13	1 to 5
23 31 00	HVAC Ducts and Casings	23 31 00	1 to 3
23 33 00	Air Duct Accessories	23 33 00	1 to 4
23 34 23	HVAC Power Ventilators	23 34 23	1 to 2
23 74 13	Packaged Rooftop Units	23 74 13	1 to 4
23 81 27	Small Split-System Heating and Cooling	23 81 27	1 to 4
DIVISION 26 - ELECTRICAL			
26 05 00	Basic Electrical Materials and Methods	26 05 00	1 to 4

Section No.	Section	Reference Codes	Page Numbers
26 05 10	Wiring Methods	26 05 10	1 to 5
26 05 26	Grounding and Bonding for Electrical Systems	26 05 26	1 to 4
26 05 34	Conduit	26 05 34	1 to 7
26 05 37	Boxes	26 05 37	1 to 5
26 05 53	Identification for Electrical Systems	26 05 53	1 to 5
26 24 16	Panelboards	26 24 16	1 to 5
26 27 26	Wiring Devices	26 27 26	1 to 5
26 51 50	General Lighting	26 51 50	1 to 2
DIVISION 28 – ELECTRONIC SAFETY AND SECURITY			
28 31 00	Fire Detection and Alarm	28 31 00	1 to 5

THIS PAGE INTENTIONALLY BLANK

GENERAL

G0.0	COVER SHEET
G1.0	BID SCHEDULE

SUBSET L - LUISA SENIOR CENTER

	ARCHITECTURAL
L-A1.0	EXISTING CONDITIONS AND REMOVALS PLAN
L-A1.1	FLOOR PLAN
L-A1.2	REFLECTED CEILING PLAN, RESTROOM PLANS
L-A1.3	ROOF PLAN
L-A2.0	EXISTING ELEVATIONS
L-A2.1	ELEVATIONS
L-A3.1	SECTIONS - ADDITION
L-A3.2	SECTIONS - PORTAL
L-A5.1	DOOR DETAILS, WINDOW DETAILS
L-A5.2	DETAILS
	STRUCTURAL
L-S0.1	GENERAL STRUCTURAL NOTES
L-S1.1	FOUNDATION PLANS, FRAMING PLANS
L-S5.1	STRUCTURAL DETAILS
	MECHANICAL - ELECTRICAL - PLUMBING
L-M0.0	MECHANICAL LEGEND AND GENERAL NOTES
L-M1.0	MECHANICAL DEMOLITION FLOOR PLAN
L-M1.1	MECHANICAL FLOOR PLAN
L-M5.1	MECHANICAL DETAILS
L-M6.0	MECHANICAL SCHEDULE
L-P0.0	PLUMBING LEGEND AND GENERAL NOTES
L-P1.0	PLUMBING DEMOLITION FLOOR PLAN
L-P1.1	PLUMBING FLOOR PLAN
L-E0.0	ELECTRICAL LEGEND AND GENERAL NOTES
L-E1.0	ELECTRICAL DEMOLITION FLOOR PLAN
L-E1.1	ELECTRICAL FLOOR PLAN LIGHTING
L-E1.2	ELECTRICAL FLOOR PLAN POWER
L-E6.0	ELECTRICAL RISER
L-E6.1	ELECTRICAL RISER

SUBSET P - PASATIEMPO SENIOR CENTER

	ARCHITECTURAL
P-A1.1	FLOOR PLAN AND REFLECTED CEILING PLAN

SUBSET V - VILLA CONSULEO SENIOR CENTER

	ARCHITECTURAL
V-A1.0	EXISTING CONDITION AND REMOVALS PLAN
V-A1.1	FLOOR PLAN
V-A1.2	REFLECTED CEILING PLAN, RESTROOM PLANS
V-A5.1	DETAILS
	MECHANICAL - ELECTRICAL - PLUMBING
V-M0.0	MECHANICAL LEGEND AND GENERAL NOTES
V-M1.0	MECHANICAL DEMOLITION FLOOR PLAN
V-M1.1	MECHANICAL FLOOR PLAN
V-M5.0	MECHANICAL DETAILS
V-M6.0	MECHANICAL SCHEDULE
V-P0.0	PLUMBING LEGEND AND GENERAL NOTES
V-P1.0	PLUMBING DEMOLITION FLOOR PLAN
V-P1.1	PLUMBING FLOOR PLAN
V-E0.0	ELECTRICAL LEGEND AND GENERAL NOTES
V-E1.0	ELECTRICAL DEMOLITION FLOOR PLAN
V-E1.1	ELECTRICAL FLOOR PLAN LIGHTING
V-E1.2	ELECTRICAL FLOOR PLAN POWER
V-E6.0	ELECTRICAL RISER
V-E6.1	ELECTRICAL RISER

PART 1 - GENERAL

RELATED DOCUMENTS

Drawings and general provisions of the Contract, including General and Supplementary Conditions and other Division 1 Specification Sections, apply to this Section.

SUMMARY

This Section includes administrative and procedural requirements for alternates.

DEFINITIONS

Alternate: An amount proposed by bidders and stated on the Bid Form for certain work defined in the Bidding Requirements that may be added to or deducted from the Base Bid amount if Owner decides to accept a corresponding change in the amount of construction to be completed.

The cost or credit for each alternate is the net addition to or deduction from the Contract Sum to incorporate alternate into the Work. No other adjustments are made to the Contract Sum.

PROCEDURES

Coordination: Modify or adjust affected adjacent work as necessary to completely integrate work of the alternate into Project.

Include as part of each alternate, miscellaneous devices, accessory objects, mechanical, electrical and plumbing work and similar items incidental to or required for a complete installation whether or not indicated as part of alternate.

Notification: Immediately following award of the Contract, notify each party involved, in writing, of the status of each alternate. Indicate if alternates have been accepted, rejected, or deferred for later consideration. Include a complete description of negotiated modifications to alternates.

Execute accepted alternates under the same conditions as other work of the Contract.

PART 2 - PRODUCTS (NOT USED)

PART 3 – EXECUTION

SCHEDULE OF ALTERNATES

See drawing G1.0 for the schedule of alternates

END OF SECTION 012300

THIS PAGE INTENTIONALLY BLANK

PART 1 - GENERAL

RELATED DOCUMENTS

Drawings and general provisions of the Contract, including General and Supplementary Conditions and other Division 1 Specification Sections, apply to this Section.

SUMMARY

This Section specifies administrative and procedural requirements for handling and processing Contract modifications.

Related Sections include the following:

Division 1 Section "Product Requirements" for administrative procedures for handling requests for substitutions made after Contract award.

MINOR CHANGES IN THE WORK

Architect will issue supplemental instructions authorizing Minor Changes in the Work, not involving adjustment to the Contract Sum or the Contract Time.

PROPOSAL REQUESTS

Owner-Initiated Proposal Requests: Architect will issue a detailed description of proposed changes in the Work that may require adjustment to the Contract Sum or the Contract Time. If necessary, the description will include supplemental or revised Drawings and Specifications.

Proposal Requests issued by Architect are for information only. Do not consider them instructions either to stop work in progress or to execute the proposed change.

Within 5 business days after receipt of Proposal Request, submit a quotation estimating cost adjustments to the Contract Sum and the Contract Time necessary to execute the change.

Include a list of quantities of products required or eliminated and unit costs, with total amount of purchases and credits to be made. If requested, furnish survey data to substantiate quantities.

Include costs of labor and supervision directly attributable to the change.

Include an updated Contractor's Construction Schedule that indicates the effect of the change, including, but not limited to, changes in activity duration, start and finish times, and activity relationship. Use available total float before requesting an extension of the Contract Time.

Contractor-Initiated Proposals: If latent or unforeseen conditions require modifications to the Contract, Contractor may propose changes by submitting a request for a change to Architect.

Include a statement outlining reasons for the change and the effect of the change on the Work. Provide a complete description of the proposed change. Indicate the effect of the proposed change on the Contract Sum and the Contract Time.

Include a list of quantities of products required or eliminated and unit costs, with total amount of purchases and credits to be made. If requested, furnish survey data to substantiate quantities.

Include costs of labor and supervision directly attributable to the change.

Include an updated Contractor's Construction Schedule that indicates the effect of the change, including, but not limited to, changes in activity duration, start and finish times, and activity relationship. Use available total float before requesting an extension of the Contract Time.

Comply with requirements in Division 01 Section "Product Requirements" if the proposed change requires substitution of one product or system for product or system specified.

CHANGE ORDER PROCEDURES

On Owner's approval of a Proposal Request, Architect will issue a Change Order for signatures of Owner and Contractor.

CONSTRUCTION CHANGE DIRECTIVE

Construction Change Directive: The Architect may issue a Construction Change Directive.

Construction Change Directive contains a complete description of change in the Work. It also designates method to be followed to determine change in the Contract Sum or the Contract Time.

Documentation: Maintain detailed records on a time and material basis of work required by the Construction Change Directive.

After completion of change, submit an itemized account and supporting data necessary to substantiate cost and time adjustments to the Contract.

PART 2 - PRODUCTS (NOT USED)

PART 3 - EXECUTION (NOT USED)

END OF SECTION 012600

PART 1 - GENERAL

RELATED DOCUMENTS

Drawings and general provisions of the Contract, including General and Supplementary Conditions and other Division 1 Specification Sections, apply to this Section.

SUMMARY

This Section specifies administrative and procedural requirements necessary to prepare and process Applications for Payment.

SCHEDULE OF VALUES

Coordination: Coordinate preparation of the Schedule of Values with preparation of Contractor's Construction Schedule.

Correlate line items in the Schedule of Values with other required administrative forms and schedules, including the following:

Application for Payment forms with Continuation Sheets.

Submittals Schedule.

Contractor's Construction Schedule.

Submit the Schedule of Values to Architect at earliest possible date but no later than seven days before the date scheduled for submittal of initial Applications for Payment.

Format and Content: Use the Project Manual table of contents as a guide to establish line items for the Schedule of Values. Provide at least one line item for each Specification Section.

Identification: Include the following Project identification on the Schedule of Values:

Project name and location.
Name of Architect.
Contractor's name and address.
Date of submittal.

Arrange the Schedule of Values in tabular form with separate columns to indicate the following for each item listed:

Related Specification Section or Division.
Description of the Work.
Name of subcontractor.
Name of manufacturer or fabricator.
Name of supplier.
Change Orders (numbers) that affect value.
Dollar value.

Percentage of the Contract Sum to nearest one-hundredth percent, adjusted to total 100 percent.

Provide a breakdown of the Contract Sum in enough detail to facilitate continued evaluation of Applications for Payment and progress reports. Coordinate with the Project Manual table of contents. Provide several line items for principal subcontract amounts, where appropriate.

Round amounts to nearest whole dollar; total shall equal the Contract Sum.

Provide a separate line item in the Schedule of Values for each part of the Work where Applications for Payment may include materials/equipment purchased/fabricated and stored, but not yet installed.

Differentiate between items stored on-site and items stored off-site. If specified, include evidence of insurance or bonded warehousing.

Provide separate line items in the Schedule of Values for initial cost of materials, for each subsequent phase of completion, and for total installed value of that part of the Work.

Allowances: Provide a separate line item in the Schedule of Values for each allowance. Show line-item value of unit-cost allowances, as a product of the unit cost, multiplied by measured quantity. Use information indicated in the Contract Documents to determine quantities.

Each item in the Schedule of Values and Applications for Payment shall be complete. Include total cost and proportionate share of general overhead and profit for each item.

Temporary facilities and other major cost items that are not direct cost of actual work-in-place may be shown either as separate line items in the Schedule of Values or distributed as general overhead expense, at Contractor's option.

Schedule Updating: Update and resubmit the Schedule of Values before the next Applications for Payment if Change Orders or Construction Change Directives result in changes to Contract Sum.

APPLICATIONS FOR PAYMENT

Each Application for Payment shall be consistent with previous applications and payments as certified by Architect and paid for by Owner.

Initial Application for Payment, Application for Payment at time of Substantial Completion, and final Application for Payment involve additional requirements.

Payment Application Times: The date for each progress payment is indicated in the Agreement between Owner and Contractor. The period of construction Work covered by each Application for Payment is the period indicated in the Agreement.

Payment Application Forms: Use AIA Document G702 and AIA Document G703 Continuation Sheets as form for Applications for Payment.

Application Preparation: Complete every entry on form. Notarize and execute by a person authorized to sign legal documents on behalf of Contractor. Architect will return incomplete applications without action.

Entries shall match data on the Schedule of Values and Contractor's Construction Schedule. Use updated schedules if revisions were made.

Include amounts of Change Orders and Construction Change Directives issued before last day of construction period covered by application.

Transmittal: Submit 3 signed and notarized original copies of each Application for Payment to Architect by a method ensuring receipt. One copy shall include waivers of lien and similar attachments if required.

Transmit each copy with a transmittal form listing attachments and recording appropriate information about application.

Waivers of Mechanic's Lien: With each Application for Payment, submit waivers of mechanic's lien from every entity who is lawfully entitled to file a mechanic's lien arising out of the Contract and related to the Work covered by the payment.

Submit partial waivers on each item for amount requested, before deduction for retainage, on each item.

When an application shows completion of an item, submit final or full waivers.

Owner reserves the right to designate which entities involved in the Work must submit waivers.

Waiver Delays: Submit each Application for Payment with Contractor's waiver of mechanic's lien for construction period covered by the application.

Submit final Application for Payment with or proceeded by final waivers from every entity involved with performance of the Work covered by the application that is lawfully entitled to a lien.

Waiver Forms: Submit waivers of lien on forms, executed in a manner acceptable to Owner.

Contractor will supply requisitions and invoices of subcontractors and materialmen if requested by Owner

Initial Application for Payment: Administrative actions and submittals that must precede or coincide with submittal of first Application for Payment include the following:

List of subcontractors.

Schedule of Values.

Contractor's Construction Schedule (preliminary if not final).

Products list.

Submittals Schedule (preliminary if not final).

List of Contractor's staff assignments.

List of Contractor's principal consultants.

Copies of building permits.

Copies of authorizations and licenses from authorities having jurisdiction for performance of the Work.

Initial progress report.

Report of preconstruction conference.

Certificates of insurance and insurance policies.

Performance and payment bonds.

Data needed to acquire Owner's insurance.

Initial settlement survey and damage report if required.

Application for Payment at Substantial Completion: After issuing the Certificate of Substantial Completion, submit an Application for Payment showing 100 percent completion for portion of the Work claimed as substantially complete.

Include documentation supporting claim that the Work is substantially complete and a statement showing an accounting of changes to the Contract Sum.

Final Payment Application: Submit final Application for Payment with releases and supporting documentation not previously submitted and accepted, including, but not limited, to the following:

Evidence of completion of Project closeout requirements.

Insurance certificates for products and completed operations where required and proof that taxes, fees, and similar obligations were paid.

Updated final statement, accounting for final changes to the Contract Sum.

AIA Document G706, "Contractor's Affidavit of Payment of Debts and Claims."

AIA Document G706A, "Contractor's Affidavit of Release of Liens."

AIA Document G707, "Consent of Surety to Final Payment."

Evidence that claims have been settled.

Final, liquidated damages settlement statement.

PART 2 - PRODUCTS (NOT USED)

PART 3 - EXECUTION (NOT USED)

END OF SECTION 012900

PART 1 - GENERAL

RELATED DOCUMENTS

Drawings and general provisions of the Contract, including General and Supplementary Conditions and other Division 1 Specification Sections, apply to this Section.

SUMMARY

This Section includes administrative provisions for coordinating construction operations on Project including, but not limited to, the following:

Coordination Drawings.
Administrative and supervisory personnel.
Project meetings.

COORDINATION

Coordination: Coordinate construction operations included in different Sections of the Specifications to ensure efficient and orderly installation of each part of the Work. Coordinate construction operations, included in different Sections that depend on each other for proper installation, connection, and operation.

Schedule construction operations in sequence required to obtain the best results where installation of one part of the Work depends on installation of other components, before or after its own installation.

Coordinate installation of different components with other contractors to ensure maximum accessibility for required maintenance, service, and repair.

Make adequate provisions to accommodate items scheduled for later installation.

Where availability of space is limited, coordinate installation of different components to ensure maximum performance and accessibility for required maintenance, service, and repair of all components, including mechanical and electrical.

Prepare memoranda for distribution to each party involved, outlining special procedures required for coordination. Include such items as required notices, reports, and list of attendees at meetings.

Prepare similar memoranda for Owner and separate contractors if coordination of their Work is required.

Administrative Procedures: Coordinate scheduling and timing of required administrative procedures with other construction activities and activities of other contractors to avoid conflicts and to ensure orderly progress of the Work. Such administrative activities include, but are not limited to, the following:

Preparation of Contractor's Construction Schedule.
Preparation of the Schedule of Values.
Installation and removal of temporary facilities and controls.
Delivery and processing of submittals.
Progress meetings.
Preinstallation conferences.
Project closeout activities.
Startup and adjustment of systems.

Project closeout activities.

Conservation: Coordinate construction activities to ensure that operations are carried out with consideration given to conservation of energy, water, and materials.

Salvage materials and equipment involved in performance of, but not actually incorporated into, the Work.

SUBMITTALS

Coordination Drawings: Prepare Coordination Drawings if limited space availability necessitates maximum utilization of space for efficient installation of different components or if coordination is required for installation of products and materials fabricated by separate entities.

Content: Project-specific information, drawn accurately to scale. Do not base Coordination Drawings on reproductions of the Contract Documents or standard printed data. Include the following information, as applicable:

Indicate functional and spatial relationships of components of architectural, structural, civil, mechanical, and electrical systems.

Indicate required installation sequences.

Indicate dimensions shown on the Contract Drawings and make specific note of dimensions that appear to be in conflict with submitted equipment and minimum clearance requirements. Provide alternate sketches to Architect for resolution of such conflicts. Minor dimension changes and difficult installations will not be considered changes to the Contract.

Sheet Size: At least 8-1/2 by 11 inches but no larger than 24 by 36 inches.

Number of Copies: Submit two opaque copies of each submittal. Architect, will return one copy.

Submit five copies where Coordination Drawings are required for operation and maintenance manuals. Architect will retain two copies; remainder will be returned. Mark up and retain one returned copy as a Project Record Drawing.

Refer to individual Sections for Coordination Drawing requirements for Work in those Sections.

Key Personnel Names: Within 15 days of starting construction operations, submit a list of key personnel assignments, including superintendent and other personnel in attendance at Project site. Identify individuals and their duties and responsibilities; list addresses and telephone numbers, including home and office telephone numbers. Provide names, addresses, and telephone numbers of individuals assigned as standbys in the absence of individuals assigned to Project.

Post copies of list in Project meeting room, in temporary field office, and by each temporary telephone. Keep list current at all times.

ADMINISTRATIVE AND SUPERVISORY PERSONNEL

General: In addition to Project superintendent, provide other administrative and supervisory personnel as required for proper performance of the Work.

Include special personnel required for coordination of operations with other contractors.

PROJECT MEETINGS

General: Schedule and conduct meetings and conferences at Project site, unless otherwise indicated.

Attendees: Inform participants and others involved, and individuals whose presence is required, of date and time of each meeting. Notify Owner and Architect of scheduled meeting dates and times.

Agenda: Prepare the meeting agenda. Distribute the agenda to all invited attendees.

Minutes: Record significant discussions and agreements achieved. Distribute the meeting minutes to everyone concerned, including Owner and Architect, within three days of the meeting.

Preconstruction Conference: Schedule a preconstruction conference before starting construction, at a time convenient to Owner and Architect, but no later than 15 days after execution of the Agreement. Hold the conference at Project site or another convenient location. Conduct the meeting to review responsibilities and personnel assignments.

Attendees: Authorized representatives of Owner, Architect, and their consultants; Contractor and its superintendent; major subcontractors; suppliers; and other concerned parties shall attend the conference. All participants at the conference shall be familiar with Project and authorized to conclude matters relating to the Work.

Agenda: Discuss items of significance that could affect progress, including the following:

Tentative construction schedule.
Phasing.
Critical work sequencing and long-lead items.
Designation of key personnel and their duties.
Procedures for processing field decisions and Change Orders.
Procedures for requests for interpretations (RFIs).
Procedures for testing and inspecting.
Procedures for processing Applications for Payment.
Distribution of the Contract Documents.
Submittal procedures.
Preparation of Record Documents.
Use of the premises and existing buildings.
Work restrictions.
Owner's occupancy requirements.
Responsibility for temporary facilities and controls.
Construction waste management and recycling.
Parking availability.
Office, work, and storage areas.
Equipment deliveries and priorities.
First aid.
Security.
Progress cleaning.
Working hours.

Minutes: Record and distribute meeting minutes.

Preinstallation Conferences: Conduct a preinstallation conference at Project site before each construction activity that requires coordination with other construction.

Attendees: Installer and representatives of manufacturers and fabricators involved in or affected by the installation and its coordination or integration with other materials and installations that have preceded or will follow, shall attend the meeting. Advise Architect of scheduled meeting dates.

Agenda: Review progress of other construction activities and preparations for the particular activity under consideration, including requirements for the following:

The Contract Documents.
Options.
Related requests for interpretations (RFIs).
Related Change Orders.
Purchases.
Deliveries.
Submittals.
Review of mockups.
Possible conflicts.
Compatibility problems.
Time schedules.
Weather limitations.
Manufacturer's written recommendations.
Warranty requirements.
Compatibility of materials.
Acceptability of substrates.
Temporary facilities and controls.
Space and access limitations.
Regulations of authorities having jurisdiction.
Testing and inspecting requirements.
Installation procedures.
Coordination with other work.
Required performance results.
Protection of adjacent work.
Protection of construction and personnel.

Record significant conference discussions, agreements, and disagreements, including required corrective measures and actions.

Reporting: Distribute minutes of the meeting to each party present and to parties who should have been present.

Do not proceed with installation if the conference cannot be successfully concluded. Initiate whatever actions are necessary to resolve impediments to performance of the Work and reconvene the conference at earliest feasible date.

Progress Meetings: Conduct progress meetings at weekly intervals. Coordinate dates of meetings with preparation of payment requests.

Attendees: In addition to representatives of Owner and Architect, each contractor, subcontractor, supplier, and other entity concerned with current progress or involved in planning, coordination, or performance of future activities shall be represented at these meetings. All participants at the conference shall be familiar with Project and authorized to conclude matters relating to the Work.

Agenda: Review and correct or approve minutes of previous progress meeting. Review other items of significance that could affect progress. Include topics for discussion as appropriate to status of Project.

Contractor's Construction Schedule: Review progress since the last meeting. Determine whether each activity is on time, ahead of schedule, or behind schedule, in relation to Contractor's Con-

struction Schedule. Determine how construction behind schedule will be expedited; secure commitments from parties involved to do so. Discuss whether schedule revisions are required to ensure that current and subsequent activities will be completed within the Contract Time.

Review schedule for next period.

Review present and future needs of each entity present, including the following:

Interface requirements.
Sequence of operations.
Status of submittals.
Deliveries.
Off-site fabrication.
Access.
Site utilization.
Temporary facilities and controls.
Work hours.
Hazards and risks.
Progress cleaning.
Quality and work standards.
Status of correction of deficient items.
Field observations.
Requests for interpretations (RFIs).
Status of proposal requests.
Pending changes.
Status of Change Orders.
Pending claims and disputes.
Documentation of information for payment requests.

Minutes: Record and distribute minutes of the meeting to each party present and to parties who should have been present.

Contractor shall clearly indicate responsible party of each unresolved issue with timeframe for expected resolution.

Schedule Updating: Revise Contractor's Construction Schedule after each progress meeting where revisions to the schedule have been made or recognized. Issue revised schedule concurrently with the report of each meeting.

REQUESTS FOR INFORMATION (RFIs)

Procedure: Immediately on discovery of the need for information of the Contract Documents, and if not possible to request information at Project meeting, prepare and submit an RFI in the form specified.

RFIs shall originate with Contractor. RFIs submitted by entities other than Contractor will be returned with no response.

Coordinate and submit RFIs in a prompt manner so as to avoid delays in Contractor's work or work of subcontractors.

Content of the RFI: Include a detailed, legible description of item needing information and the following:

Project name.
Date.

Name of Contractor.
Name of Architect.
RFI number, numbered sequentially.
Drawing number and detail references, as appropriate.
Field dimensions and conditions, as appropriate.
Contractor's suggested solution(s). If Contractor's solution(s) impact the Contract Time or the Contract Sum, Contractor shall state impact in the RFI.
Contractor's signature.
Attachments: Include drawings, descriptions, measurements, photos, Product Data, Shop Drawings, and other information necessary to fully describe items needing information.

Supplementary drawings prepared by Contractor shall include dimensions, thicknesses, structural grid references, and details of affected materials, assemblies, and attachments.

Architect's Action: Architect will review each RFI, determine action required, and return it. Allow seven working days for Architect's response for each RFI.

The following RFIs will be returned without action:

Requests for coordination information already indicated in the Contract Documents.

Requests for interpretation of Architect's actions on submittals.

Incomplete RFIs or RFIs with numerous errors.

Architect's action may include a request for additional information, in which case Architect's time for response will start again.

Architect's action on RFIs that may result in a change to the Contract Time or the Contract Sum may be eligible for Contractor to submit Change Proposal according to Division 01 Section "Contract Modification Procedures."

If Contractor believes the RFI response warrants change in the Contract Time or the Contract Sum, notify Architect in writing within 7 days of receipt of the RFI response.

On receipt of Architect's action, update the RFI log and immediately distribute the RFI response to affected parties. Review response and notify Architect within seven days if Contractor disagrees with response.

RFI Log: Prepare, maintain, and submit a tabular log of RFIs organized by the RFI number. Submit log weekly. Include the following:

Project name.
Name and address of Contractor.
Name and address of Architect.
RFI number and description.
Date the RFI was submitted.
Date Architect's response was received.
Identification of related Minor Change in the Work, Construction Change Directive, and Proposal Request, as appropriate.

PART 2 - PRODUCTS (NOT USED)

PART 3 - EXECUTION (NOT USED)

END OF SECTION 013100

THIS PAGE INTENTIONALLY BLANK

PART 1 - GENERAL

RELATED DOCUMENTS

Drawings and general provisions of the Contract, including General and Supplementary Conditions and other Division 1 Specification Sections, apply to this Section.

SUMMARY

This Section includes administrative and procedural requirements for documenting the progress of construction during performance of the Work, including the following:

Contractor's Construction Schedule.
Submittals Schedule.
Daily construction reports.
Material location reports.
Field condition reports.
Special reports.

Related Sections include the following:

Division 1 Section "Payment Procedures" for submitting the Schedule of Values.
Division 1 Section "Project Management and Coordination" for submitting and distributing meeting and conference minutes and RFI requirements.
Division 1 Section "Submittal Procedures" for submitting schedules and reports.
Division 1 Section "Quality Requirements" for submitting a schedule of tests and inspections.

SUBMITTALS

Submittals Schedule: Submit three copies of schedule. Arrange the following information in a tabular format:

Scheduled date for first submittal.
Specification Section number and title.
Submittal category (action or informational).
Name of subcontractor.
Description of the Work covered.
Scheduled date for Architect's final release or approval.

Contractor's Construction Schedule: Submit [two] <Insert number> opaque copies of initial schedule, large enough to show entire schedule for entire construction period.

Submit an electronic copy of schedule, using software indicated, on CD-R, and labeled to comply with requirements for submittals. Include type of schedule (Initial or Updated) and date on label.

Daily Construction Reports: Submit two copies at weekly intervals.

Material Location Reports: Submit two copies at weekly intervals.

Field Condition Reports: Submit two copies at time of discovery of differing conditions.

Special Reports: Submit two copies at time of unusual event.

COORDINATION

Coordinate preparation and processing of schedules and reports with performance of construction activities and with scheduling and reporting of separate contractors.

Coordinate Contractor's Construction Schedule with the Schedule of Values, list of subcontracts, Submittals Schedule, progress reports, payment requests, and other required schedules and reports.

Secure time commitments for performing critical elements of the Work from parties involved.

Coordinate each construction activity in the network with other activities and schedule them in proper sequence.

PART 2 - PRODUCTS

SUBMITTALS SCHEDULE

Preparation: Submit a schedule of submittals, arranged in chronological order by dates required by construction schedule. Include time required for review, resubmittal, ordering, manufacturing, fabrication, and delivery when establishing dates.

Coordinate Submittals Schedule with list of subcontracts, the Schedule of Values, and Contractor's Construction Schedule.

Initial Submittal: Include submittals required during the first 60 days of construction. List those required to maintain orderly progress of the Work and those required early because of long lead time for manufacture or fabrication.

Final Submittal: Submit concurrently with the first complete submittal of Contractor's Construction Schedule.

CONTRACTOR'S CONSTRUCTION SCHEDULE, GENERAL

Procedures: Comply with procedures contained in AGC's "Construction Planning & Scheduling."

Time Frame: Extend schedule from date established for the Notice to Proceed to date of Substantial Completion.

Contract completion date shall not be changed by submission of a schedule that shows an early completion date, unless specifically authorized by Change Order.

Activities: Treat each separate building or area as a separate numbered activity for each principal element of the Work. Comply with the following:

Submittal Review Time: Include review and resubmittal times indicated in Division 1 Section "Submittal Procedures" in schedule. Coordinate submittal review times in Contractor's Construction Schedule with Submittals Schedule.

Startup and Testing Time: Include sufficient time for startup and testing of HVAC equipment.

Substantial Completion: Indicate completion in advance of date established for Substantial Completion, and allow time for Architect's administrative procedures necessary for certification of Substantial Completion.

Constraints: Include constraints and work restrictions indicated in the Contract Documents and as follows in schedule, and show how the sequence of the Work is affected.

Phasing: Arrange list of activities on schedule by phase.

Work Restrictions: Show the effect of the following items on the schedule:

Coordination with existing construction.
Limitations of continued occupancies.
Uninterruptible services.
Partial occupancy before Substantial Completion.
Use of premises restrictions.
Provisions for future construction.
Seasonal variations.
Environmental control.

Work Stages: Indicate important stages of construction for each major portion of the Work, including, but not limited to, the following:

Subcontract awards.
Submittals.
Purchases.
Mockups.
Fabrication.
Sample testing.
Deliveries.
Installation.
Tests and inspections.
Adjusting.
Curing.
Startup and placement into final use and operation.

Milestones: Include milestones indicated in the Contract Documents in schedule, including, but not limited to, the Notice to Proceed, Substantial Completion, and Final Completion.

Contract Modifications: For each proposed contract modification and concurrent with its submission, prepare a time-impact analysis using fragnets to demonstrate the effect of the proposed change on the overall project schedule.

CONTRACTOR'S CONSTRUCTION SCHEDULE

Bar-Chart Schedule: Submit horizontal bar-chart-type construction schedule within seven days of date established for the Notice to Proceed.

Preparation: Indicate each significant construction activity separately. Identify first workday of each week with a continuous vertical line.

REPORTS

Daily Construction Reports: Prepare a daily construction report recording the following information concerning events at Project site:

List of subcontractors at Project site.
List of separate contractors at Project site.

Approximate count of personnel at Project site.
Equipment at Project site.
Material deliveries.
High and low temperatures and general weather conditions.
Accidents.
Meetings and significant decisions.
Unusual events (refer to special reports).
Stoppages, delays, shortages, and losses.
Meter readings and similar recordings.
Emergency procedures.
Orders and requests of authorities having jurisdiction.
Change Orders received and implemented.
Construction Change Directives received and implemented.
Services connected and disconnected.
Equipment or system tests and startups.
Partial Completions and occupancies.
Substantial Completions authorized.

Material Location Reports: At monthly intervals, prepare and submit a comprehensive list of materials delivered to and stored at Project site. List shall be cumulative, showing materials previously reported plus items recently delivered. Include with list a statement of progress on and delivery dates for materials or items of equipment fabricated or stored away from Project site.

Field Condition Reports: Immediately on discovery of a difference between field conditions and the Contract Documents, prepare and submit a detailed report. Submit with a request for interpretation. Include a detailed description of the differing conditions, together with recommendations for changing the Contract Documents.

SPECIAL REPORTS

General: Submit special reports directly to Owner within one day of an occurrence. Distribute copies of report to parties affected by the occurrence.

Reporting Unusual Events: When an event of an unusual and significant nature occurs at Project site, whether or not related directly to the Work, prepare and submit a special report. List chain of events, persons participating, response by Contractor's personnel, evaluation of results or effects, and similar pertinent information. Advise Owner in advance when these events are known or predictable.

PART 3 - EXECUTION

CONTRACTOR'S CONSTRUCTION SCHEDULE

Contractor's Construction Schedule Updating: Prior to each weekly job conference, update schedule to reflect actual construction progress and activities. Issue schedule at each regularly one week before before each regularly scheduled progress meeting.

Revise schedule immediately after each meeting or other activity where revisions have been recognized or made. Issue updated schedule concurrently with the report of each such meeting.

Include a report with updated schedule that indicates every change, including, but not limited to, changes in logic, durations, actual starts and finishes, and activity durations.

As the Work progresses, indicate Actual Completion percentage for each activity.

Distribution: Distribute copies of approved schedule to Architect, Owner, separate contractors, testing and inspecting agencies, and other parties identified by Contractor with a need-to-know schedule responsibility.

Post copies in Project meeting rooms and temporary field offices.

When revisions are made, distribute updated schedules to the same parties and post in the same locations. Delete parties from distribution when they have completed their assigned portion of the Work and are no longer involved in performance of construction activities.

END OF SECTION 013200

THIS PAGE INTENTIONALLY BLANK

PART 1 - GENERAL

RELATED DOCUMENTS

Drawings and general provisions of the Contract, including General and Supplementary Conditions and other Division 1 Specification Sections, apply to this Section.

SUMMARY

This Section includes administrative and procedural requirements for submitting Shop Drawings, Product Data, Samples, and other submittals.

Related Sections include the following:

Division 1 Section "Payment Procedures" for submitting Applications for Payment and the Schedule of Values.

Division 1 Section "Project Management and Coordination" for submitting and distributing meeting and conference minutes and for submitting Coordination Drawings.

Division 1 Section "Construction Progress Documentation" for submitting schedules and reports, including Contractor's Construction Schedule and the Submittals Schedule.

Division 1 Section "Quality Requirements" for submitting test and inspection reports and for mockup requirements.

Division 1 Section "Closeout Procedures" for submitting warranties.

Division 1 Section "Project Record Documents" for submitting Record Drawings, Record Specifications, and Record Product Data.

Division 1 Section "Operation and Maintenance Data" for submitting operation and maintenance manuals.

Division 1 Section "Demonstration and Training" for submitting videotapes of demonstration of equipment and training of Owner's personnel.

Divisions 2 through 33 Sections for specific requirements for submittals in those Sections.

DEFINITIONS

Action Submittals: Written and graphic information that requires Architect's responsive action.

Informational Submittals: Written information that does not require Architect's responsive action. Submittals may be rejected for not complying with requirements.

SUBMITTAL PROCEDURES

General: Electronic copies of CAD Drawings of the Contract Drawings will be provided by Architect for Contractor's use in preparing submittals. Drawings are for informational purposes only. All existing conditions, dimensions and sizes shall be field verified. Architect is not responsible for any discrepancies, omission, or errors from built work. Architectural drawings shall be provided but mechanical, electrical, plumbing, civil drawings may not be available.

Coordination: Coordinate preparation and processing of submittals with performance of construction activities.

Coordinate each submittal with fabrication, purchasing, testing, delivery, other submittals, and related activities that require sequential activity.

Coordinate transmittal of different types of submittals for related parts of the Work so processing will not be delayed because of need to review submittals concurrently for coordination.

Architect reserves the right to withhold action on a submittal requiring coordination with other submittals until related submittals are received.

Submittals Schedule: Comply with requirements in Division 1 Section "Construction Progress Documentation" for list of submittals and time requirements for scheduled performance of related construction activities.

Processing Time: Allow enough time for submittal review, including time for resubmittals, as follows. Time for review shall commence on Architect's receipt of submittal. No extension of the Contract Time will be authorized because of failure to transmit submittals enough in advance of the Work to permit processing, including resubmittals.

Initial Review: Allow 15 days for initial review of each submittal. Allow additional time if coordination with subsequent submittals is required. Architect will advise Contractor when a submittal being processed must be delayed for coordination.

Intermediate Review: If intermediate submittal is necessary, process it in same manner as initial submittal.

Resubmittal Review: Allow 15 days for review of each resubmittal.

Sequential Review: Where sequential review of submittals by Architect's consultants, Owner, or other parties is indicated, allow 21 days for initial review of each submittal.

Submittals requiring sequential review shall be indicated on the initial submittal schedule submission. Structural submittals in Division 3 through 6 require sequential review. Mechanical, Electrical, Plumbing, Civil and Landscaping submittal in Division 22 through 33 will require sequential review.

Identification: Place a permanent label or title block on each submittal for identification.

Indicate name of firm or entity that prepared each submittal on label or title block.

Provide a space approximately 4 x 5 inches on label or beside title block to record Contractor's review and approval markings and action taken by Architect.

Include the following information on label for processing and recording action taken:

Project name.
Date.
Name and address of Architect.
Name and address of Contractor.
Name and address of subcontractor.
Name and address of supplier.
Name of manufacturer.
Submittal number or other unique identifier, including revision identifier.

Submittal number shall use Specification Section number followed by a decimal point and then a sequential number (e.g., 06100.01). Resubmittals shall include an alphabetic suffix after another decimal point (e.g., 06100.01.A).

Number and title of appropriate Specification Section.
Drawing number and detail references, as appropriate.
Location(s) where product is to be installed, as appropriate.
Other necessary identification.

Deviations: Highlight, encircle or otherwise specifically identify deviations from the Contract Documents on submittals.

Transmittal: Package each submittal individually and appropriately for transmittal and handling. Transmit each submittal using a transmittal form. Architect will return submittals, without review, received from sources other than Contractor.

Transmittal Form: Provide locations on form for the following information:

Project name.
Date.
Destination (To:).
Source (From:).
Names of subcontractor, manufacturer, and supplier.
Submittal purpose and description.
Specification Section number and title.
Drawing number and detail references, as appropriate.
Transmittal number, numbered consecutively.
Submittal and transmittal distribution record.
Remarks.
Signature of transmitter.

On an attached separate sheet, prepared on Contractor's letterhead, record relevant information, requests for data, revisions other than those requested by Architect on previous submittals, and deviations from requirements in the Contract Documents, including minor variations and limitations. Include same label information as related submittal.

Resubmittals: Make resubmittals in same form and number of copies as initial submittal.

Note date and content of previous submittal.

Note date and content of revision in label or title block and clearly indicate extent of revision.

Resubmit submittals until they are marked "approved”."

Distribution: Furnish copies of final submittals to manufacturers, subcontractors, suppliers, fabricators, installers, authorities having jurisdiction, and others as necessary for performance of construction activities. Show distribution on transmittal forms.

Use for Construction: Use only final submittals with mark indicating "approved" taken by Architect.

PART 2 - PRODUCTS

ACTION SUBMITTALS

General: Prepare and submit Action Submittals required by individual Specification Sections.

Submit electronic submittals directly to extranet specifically established for Project.

Product Data: Collect information into a single submittal for each element of construction and type of product or equipment.

If information must be specially prepared for submittal because standard printed data are not suitable for use, submit as Shop Drawings, not as Product Data.

Mark each copy of each submittal to show which products and options are applicable.

Include the following information, as applicable:

Manufacturer's written recommendations.
Manufacturer's product specifications.
Manufacturer's installation instructions.
Standard color charts.
Manufacturer's catalog cuts.
Wiring diagrams showing factory-installed wiring.
Printed performance curves.
Operational range diagrams.
Mill reports.
Standard product operation and maintenance manuals.
Compliance with specified referenced standards.
Testing by recognized testing agency.
Application of testing agency labels and seals.
Notation of coordination requirements.

Submit Product Data before or concurrent with Samples.

Shop Drawings: Prepare Project-specific information, drawn accurately to scale. Do not base Shop Drawings on reproductions of the Contract Documents or standard printed data.

Preparation: Fully illustrate requirements in the Contract Documents. Include the following information, as applicable:

Dimensions.
Identification of products.
Fabrication and installation drawings.
Roughing-in and setting diagrams.
Wiring diagrams showing field-installed wiring, including power, signal, and control wiring.
Shopwork manufacturing instructions.
Templates and patterns.
Schedules.
Design calculations.
Compliance with specified standards.
Notation of coordination requirements.

Notation of dimensions established by field measurement.
Relationship to adjoining construction clearly indicated.
Seal and signature of professional engineer if specified.
Wiring Diagrams: Differentiate between manufacturer-installed and field-installed wiring.

Sheet Size: Except for templates, patterns, and similar full-size drawings, submit Shop Drawings on sheets at least 8-1/2 by 11 inches (215 by 280 mm) but no larger than 30 by 40 inches (750 by 1000 mm).

Number of Copies: Submit four opaque copies of each submittal, unless copies are required for operation and maintenance manuals. Submit six copies where copies are required for operation and maintenance manuals. Architect will return a minimum of two copies. Mark up and retain one returned copy as a Project Record Drawing.

Samples: Submit Samples for review of kind, color, pattern, and texture for a check of these characteristics with other elements and for a comparison of these characteristics between submittal and actual component as delivered and installed.

Transmit Samples that contain multiple, related components such as accessories together in one submittal package.

Identification: Attach label on unexposed side of Samples that includes the following:

Generic description of Sample.
Product name and name of manufacturer.
Sample source.
Number and title of appropriate Specification Section.

Disposition: Maintain sets of approved Samples at Project site, available for quality-control comparisons throughout the course of construction activity. Sample sets may be used to determine final acceptance of construction associated with each set.

Samples that may be incorporated into the Work are indicated in individual Specification Sections. Such Samples must be in an undamaged condition at time of use.

Samples not incorporated into the Work, or otherwise designated as Owner's property, are the property of Contractor.

Samples for Initial Selection: Submit manufacturer's color charts consisting of units or sections of units showing the full range of colors, textures, and patterns available.

Number of Samples: Submit one full set(s) of available choices where color, pattern, texture, or similar characteristics are required to be selected from manufacturer's product line. Architect will return submittal with options selected.

Samples for Verification: Submit full-size units or Samples of size indicated, prepared from same material to be used for the Work, cured and finished in manner specified, and physically identical with material or product proposed for use, and that show full range of color and texture variations expected. Samples include, but are not limited to, the following: partial sections of manufactured or fabricated components; small cuts or containers of materials; complete units of repetitively used materials; swatches showing color, texture, and pattern; color range sets; and components used for independent testing and inspection.

Number of Samples: Submit three sets of Samples. Architect will retain one sample sets; remainder will be returned. Mark up and retain one returned Sample set as a Project Record Sample.

Submit a single Sample where assembly details, workmanship, fabrication techniques, connections, operation, and other similar characteristics are to be demonstrated.

If variation in color, pattern, texture, or other characteristic is inherent in material or product represented by a Sample, submit at least three sets of paired units that show approximate limits of variations.

Product Schedule or List: As required in individual Specification Sections, prepare a written summary indicating types of products required for the Work and their intended location. Include the following information in tabular form:

Type of product. Include unique identifier for each product.

Number and name of room or space.

Location within room or space.

Number of Copies: Submit three copies of product schedule or list, unless otherwise indicated. Architect will return two copies.

Mark up and retain one returned copy as a Project Record Document.

Contractor's Construction Schedule: Comply with requirements specified in Division 1 Section "Construction Progress Documentation" for Construction Manager's action.

Submittals Schedule: Comply with requirements specified in Division 1 Section "Construction Progress Documentation."

Application for Payment: Comply with requirements specified in Division 1 Section "Payment Procedures."

Schedule of Values: Comply with requirements specified in Division 1 Section "Payment Procedures."

Subcontract List: Prepare a written summary identifying individuals or firms proposed for each portion of the Work, including those who are to furnish products or equipment fabricated to a special design. Include the following information in tabular form:

Name, address, and telephone number of entity performing subcontract or supplying products.

Number and title of related Specification Section(s) covered by subcontract.

Drawing number and detail references, as appropriate, covered by subcontract.

Number of Copies: Submit three copies of subcontractor list, unless otherwise indicated. Architect will return two copies.

Mark up and retain one returned copy as a Project Record Document.

INFORMATIONAL SUBMITTALS

General: Prepare and submit Informational Submittals required by other Specification Sections.

Number of Copies: Submit two copies of each submittal, unless otherwise indicated. Architect will not return copies.

Certificates and Certifications: Provide a notarized statement that includes signature of entity responsible for preparing certification. Certificates and certifications shall be signed by an officer or other individual authorized to sign documents on behalf of that entity.

Test and Inspection Reports: Comply with requirements specified in Division 1 Section "Quality Requirements."

Coordination Drawings: Comply with requirements specified in Division 1 Section "Project Management and Coordination."

Contractor's Construction Schedule: Comply with requirements specified in Division 1 Section "Construction Progress Documentation."

Qualification Data: Prepare written information that demonstrates capabilities and experience of firm or person. Include lists of completed projects with project names and addresses, names and addresses of architects and owners, and other information specified.

Welding Certificates: Prepare written certification that welding procedures and personnel comply with requirements in the Contract Documents. Submit record of Welding Procedure Specification (WPS) and Procedure Qualification Record (PQR) on AWS forms. Include names of firms and personnel certified.

Installer Certificates: Prepare written statements on manufacturer's letterhead certifying that Installer complies with requirements in the Contract Documents and, where required, is authorized by manufacturer for this specific Project.

Manufacturer Certificates: Prepare written statements on manufacturer's letterhead certifying that manufacturer complies with requirements in the Contract Documents. Include evidence of manufacturing experience where required.

Product Certificates: Prepare written statements on manufacturer's letterhead certifying that product complies with requirements in the Contract Documents.

Material Certificates: Prepare written statements on manufacturer's letterhead certifying that material complies with requirements in the Contract Documents.

Material Test Reports: Prepare reports written by a qualified testing agency, on testing agency's standard form, indicating and interpreting test results of material for compliance with requirements in the Contract Documents.

Product Test Reports: Prepare written reports indicating current product produced by manufacturer complies with requirements in the Contract Documents. Base reports on evaluation of tests performed by manufacturer and witnessed by a qualified testing agency, or on comprehensive tests performed by a qualified testing agency.

Research/Evaluation Reports: Prepare written evidence, from a model code organization acceptable to authorities having jurisdiction, that product complies with building code in effect for Project. Include the following information:

Name of evaluation organization.

Date of evaluation.

Time period when report is in effect.

Product and manufacturers' names.

Description of product.

Test procedures and results.

Limitations of use.

Schedule of Tests and Inspections: Comply with requirements specified in Division 1 Section "Quality Requirements."

Compatibility Test Reports: Prepare reports written by a qualified testing agency, on testing agency's standard form, indicating and interpreting results of compatibility tests performed before installation of product. Include written recommendations for primers and substrate preparation needed for adhesion.

Field Test Reports: Prepare reports written by a qualified testing agency, on testing agency's standard form, indicating and interpreting results of field tests performed either during installation of product or after product is installed in its final location, for compliance with requirements in the Contract Documents.

Maintenance Data: Prepare written and graphic instructions and procedures for operation and normal maintenance of products and equipment. Comply with requirements specified in Division 1 Section "Operation and Maintenance Data."

Design Data: Prepare written and graphic information, including, but not limited to, performance and design criteria, list of applicable codes and regulations, and calculations. Include list of assumptions and other performance and design criteria and a summary of loads. Include load diagrams if applicable. Provide name and version of software, if any, used for calculations. Include page numbers.

Manufacturer's Instructions: Prepare written or published information that documents manufacturer's recommendations, guidelines, and procedures for installing or operating a product or equipment. Include name of product and name, address, and telephone number of manufacturer. Include the following, as applicable:

Preparation of substrates.

Required substrate tolerances.

Sequence of installation or erection.

Required installation tolerances.

Required adjustments.

Recommendations for cleaning and protection.

Manufacturer's Field Reports: Prepare written information documenting factory-authorized service representative's tests and inspections. Include the following, as applicable:

Name, address, and telephone number of factory-authorized service representative making report.

Statement on condition of substrates and their acceptability for installation of product.

Statement that products at Project site comply with requirements.

Summary of installation procedures being followed, whether they comply with requirements and, if not, what corrective action was taken.

Results of operational and other tests and a statement of whether observed performance complies with requirements.

Statement whether conditions, products, and installation will affect warranty.

Other required items indicated in individual Specification Sections.

Insurance Certificates and Bonds: Prepare written information indicating current status of insurance or bonding coverage. Include name of entity covered by insurance or bond, limits of coverage, amounts of deductibles, if any, and term of the coverage.

Material Safety Data Sheets (MSDSs): Submit information directly to Owner; do not submit to Architect, except as required in "Action Submittals" Article.

Architect will not review submittals that include MSDSs and will return the entire submittal for resubmittal.

DELEGATED DESIGN

Performance and Design Criteria: Where professional design services or certifications by a design professional are specifically required of Contractor by the Contract Documents, provide products and systems complying with specific performance and design criteria indicated.

If criteria indicated are not sufficient to perform services or certification required, submit a written request for additional information to Architect.

Delegated-Design Submittal: In addition to Shop Drawings, Product Data, and other required submittals, submit three copies of a statement, signed and sealed by the responsible design professional, for each product and system specifically assigned to Contractor to be designed or certified by a design professional.

Indicate that products and systems comply with performance and design criteria in the Contract Documents. Include list of codes, loads, and other factors used in performing these services.

PART 3 - EXECUTION

CONTRACTOR'S REVIEW

Review each submittal and check for coordination with other Work of the Contract and for compliance with the Contract Documents. Note corrections and field dimensions. Mark with approval stamp before submitting to Architect.

Approval Stamp: Stamp each submittal with a uniform, approval stamp. Include Project name and location, submittal number, Specification Section title and number, name of reviewer, date of Contractor's approval, and statement certifying that submittal has been reviewed, checked, and approved for compliance with the Contract Documents.

ARCHITECT'S ACTION

General: Architect will not review submittals that do not bear Contractor's approval stamp and will return them without action.

Action Submittals: Architect will review each submittal, make marks to indicate corrections or modifications required, and return it. Architect will stamp each submittal with an action stamp and will mark stamp appropriately to indicate action taken, as follows:

Final Unrestricted Release: Where submittals are marked "Approved," that part of the Work covered by the submittal may proceed provided it complies with requirements of the Contract Documents; final acceptance will depend upon that compliance.

Final-But-Restricted Release: When submittals are marked "Approved as Noted," that part of the Work covered by the submittal may proceed provided it complies with notations or corrections on the submittal and requirements of the Contract Documents; final acceptance will depend on that compliance.

Returned for Resubmittal: When submittal is marked “Not Approved” or “Revise and Resubmit,” do not proceed with that part of the Work covered by the submittal, including purchasing, fabrication, delivery, or other activity. Revise or prepare a new submittal in accordance with the notations; resubmit without delay. Repeat if necessary to obtain a different action mark.

Informational Submittals: Architect will review each submittal and will not return it, or will return it if it does not comply with requirements. Architect will forward each submittal to appropriate party.

Partial submittals are not acceptable, will be considered nonresponsive, and will be returned without review.

Submittals not required by the Contract Documents may not be reviewed and may be discarded.

END OF SECTION 013300

PART 1 - GENERAL

RELATED DOCUMENTS

Drawings and general provisions of the Contract, including General and Supplementary Conditions and other Division 1 Specification Sections, apply to this Section.

SUMMARY

This Section includes administrative and procedural requirements for quality assurance and quality control.

Testing and inspecting services are required to verify compliance with requirements specified or indicated. These services do not relieve Contractor of responsibility for compliance with the Contract Document requirements.

Specific quality-assurance and -control requirements for individual construction activities are specified in the Sections that specify those activities. Requirements in those Sections may also cover production of standard products.

Specified tests, inspections, and related actions do not limit Contractor's other quality-assurance and -control procedures that facilitate compliance with the Contract Document requirements.

Requirements for Contractor to provide quality-assurance and -control services required by Architect, Owner, or authorities having jurisdiction are not limited by provisions of this Section.

Related Sections include the following:

Division 1 Section "Construction Progress Documentation" for developing a schedule of required tests and inspections.

Division 1 Section "Cutting and Patching" for repair and restoration of construction disturbed by testing and inspecting activities.

Divisions 2 through 33 Sections for specific test and inspection requirements.

DEFINITIONS

Quality-Assurance Services: Activities, actions, and procedures performed before and during execution of the Work to guard against defects and deficiencies and substantiate that proposed construction will comply with requirements.

Quality-Control Services: Tests, inspections, procedures, and related actions during and after execution of the Work to evaluate that actual products incorporated into the Work and completed construction comply with requirements. Services do not include contract enforcement activities performed by Architect.

Mockups: Full-size, physical assemblies that are constructed on-site. Mockups are used to verify selections made under sample submittals, to demonstrate aesthetic effects and, where indicated, qualities of materials and execution, and to review construction, coordination, testing, or operation; they are not Samples. Approved mockups establish the standard by which the Work will be judged.

Preconstruction Testing: Tests and inspections that are performed specifically for the Project before products and materials are incorporated into the Work to verify performance or compliance with specified criteria.

Product Testing: Tests and inspections that are performed by an NRTL, an NVLAP, or a testing agency qualified to conduct product testing and acceptable to authorities having jurisdiction, to establish product performance and compliance with industry standards.

Source Quality-Control Testing: Tests and inspections that are performed at the source, i.e., plant, mill, factory, or shop.

Field Quality-Control Testing: Tests and inspections that are performed on-site for installation of the Work and for completed Work.

Testing Agency: An entity engaged to perform specific tests, inspections, or both. Testing laboratory shall mean the same as testing agency.

Installer/Applicator/Erector: Contractor or another entity engaged by Contractor as an employee, Subcontractor, or Sub-subcontractor, to perform a particular construction operation, including installation, erection, application, and similar operations.

> Using a term such as "carpentry" does not imply that certain construction activities must be performed by accredited or unionized individuals of a corresponding generic name, such as "carpenter." It also does not imply that requirements specified apply exclusively to tradespeople of the corresponding generic name.

Experienced: When used with an entity, "experienced" means having successfully completed a minimum of five previous projects similar in size and scope to this Project; being familiar with special requirements indicated; and having complied with requirements of authorities having jurisdiction.

CONFLICTING REQUIREMENTS

General: If compliance with two or more standards is specified and the standards establish different or conflicting requirements for minimum quantities or quality levels, comply with the most stringent requirement. Refer uncertainties and requirements that are different, but apparently equal, to Architect for a decision before proceeding.

Minimum Quantity or Quality Levels: The quantity or quality level shown or specified shall be the minimum provided or performed. The actual installation may comply exactly with the minimum quantity or quality specified, or it may exceed the minimum within reasonable limits. To comply with these requirements, indicated numeric values are minimum or maximum, as appropriate, for the context of requirements. Refer uncertainties to Architect for a decision before proceeding.

SUBMITTALS

Qualification Data: For testing agencies specified in "Quality Assurance" Article to demonstrate their capabilities and experience. Include proof of qualifications in the form of a recent report on the inspection of the testing agency by a recognized authority.

Schedule of Tests and Inspections: Prepare in tabular form and include the following:

Specification Section number and title.
Description of test and inspection.
Identification of applicable standards.
Identification of test and inspection methods.
Number of tests and inspections required.
Time schedule or time span for tests and inspections.
Entity responsible for performing tests and inspections.

Requirements for obtaining samples.
Unique characteristics of each quality-control service.

Reports: Prepare and submit certified written reports that include the following:

Date of issue.
Project title and number.
Name, address, and telephone number of testing agency.
Dates and locations of samples and tests or inspections.
Names of individuals making tests and inspections.
Description of the Work and test and inspection method.
Identification of product and Specification Section.
Complete test or inspection data.
Test and inspection results and an interpretation of test results.
Record of temperature and weather conditions at time of sample taking and testing and inspecting.
Comments or professional opinion on whether tested or inspected Work complies with the Contract Document requirements.
Name and signature of laboratory inspector.
Recommendations on retesting and reinspecting.

Permits, Licenses, and Certificates: For Owner's records, submit copies of permits, licenses, certifications, inspection reports, releases, jurisdictional settlements, notices, receipts for fee payments, judgments, correspondence, records, and similar documents, established for compliance with standards and regulations bearing on performance of the Work.

QUALITY ASSURANCE

General: Qualifications paragraphs in this Article establish the minimum qualification levels required; individual Specification Sections specify additional requirements.

Installer Qualifications: A firm or individual experienced in installing, erecting, or assembling work similar in material, design, and extent to that indicated for this Project, whose work has resulted in construction with a record of successful in-service performance.

Manufacturer Qualifications: A firm experienced in manufacturing products or systems similar to those indicated for this Project and with a record of successful in-service performance, as well as sufficient production capacity to produce required units.

Fabricator Qualifications: A firm experienced in producing products similar to those indicated for this Project and with a record of successful in-service performance, as well as sufficient production capacity to produce required units.

Professional Engineer Qualifications: A professional engineer who is legally qualified to practice in jurisdiction where Project is located and who is experienced in providing engineering services of the kind indicated. Engineering services are defined as those performed for installations of the system, assembly, or product that are similar to those indicated for this Project in material, design, and extent.

Specialists: Certain sections of the Specifications require that specific construction activities shall be performed by entities who are recognized experts in those operations. Specialists shall satisfy qualification requirements indicated and shall be engaged for the activities indicated.

Requirement for specialists shall not supersede building codes and regulations governing the Work.

Testing Agency Qualifications: An NRTL, an NVLAP, or an independent agency with the experience and capability to conduct testing and inspecting indicated, as documented according to ASTM E 548; and with additional qualifications specified in individual Sections; and where required by authorities having jurisdiction, that is acceptable to authorities.

NRTL: A nationally recognized testing laboratory according to 29 CFR 1910.7.

NVLAP: A testing agency accredited according to NIST's National Voluntary Laboratory Accreditation Program.

Factory-Authorized Service Representative Qualifications: An authorized representative of manufacturer who is trained and approved by manufacturer to inspect installation of manufacturer's products that are similar in material, design, and extent to those indicated for this Project.

Preconstruction Testing: Where testing agency is indicated to perform preconstruction testing for compliance with specified requirements for performance and test methods, comply with the following:

Contractor responsibilities include the following:

Provide test specimens representative of proposed products and construction.

Submit specimens in a timely manner with sufficient time for testing and analyzing results to prevent delaying the Work.

Provide sizes and configurations of test assemblies, mockups, and laboratory mockups to adequately demonstrate capability of products to comply with performance requirements.

Build site-assembled test assemblies and mockups using installers who will perform same tasks for Project.

When testing is complete, remove test specimens, assemblies, mockups, and laboratory mockups; do not reuse products on Project.

Testing Agency Responsibilities: Submit a certified written report of each test, inspection, and similar quality-assurance service to Architect], with copy to Contractor. Interpret tests and inspections and state in each report whether tested and inspected work complies with or deviates from the Contract Documents.

Mockups: Before installing portions of the Work requiring mockups, build mockups for each form of construction and finish required to comply with the following requirements, using materials indicated for the completed Work:

Build mockups in location and of size indicated or, if not indicated, as directed by Architect.

Notify Architect seven days in advance of dates and times when mockups will be constructed.

Demonstrate the proposed range of aesthetic effects and workmanship.

Obtain Architect's approval of mockups before starting work, fabrication, or construction.

Allow seven days for initial review and each re-review of each mockup.

Maintain mockups during construction in an undisturbed condition as a standard for judging the completed Work.

Demolish and remove mockups when directed, unless otherwise indicated.

QUALITY CONTROL

Tests and inspections not explicitly assigned to Owner are Contractor's responsibility. Unless otherwise indicated, provide quality-control services specified and those required by authorities having jurisdiction. Perform quality-control services required of Contractor by authorities having jurisdiction, whether specified or not.

Where services are indicated as Contractor's responsibility, engage a qualified testing agency to perform these quality-control services.

Contractor shall not employ same entity engaged by Owner, unless agreed to in writing by Owner.

Where quality-control services are indicated as Contractor's responsibility, submit a certified written report, in duplicate, of each quality-control service.

Testing and inspecting requested by Contractor and not required by the Contract Documents are Contractor's responsibility.

Submit additional copies of each written report directly to authorities having jurisdiction, when they so direct.

Manufacturer's Field Services: Where indicated, engage a factory-authorized service representative to inspect field-assembled components and equipment installation, including service connections. Report results in writing as specified in Division 1 Section "Submittal Procedures."

Retesting/Reinspecting: Regardless of whether original tests or inspections were Contractor's responsibility, provide quality-control services, including retesting and reinspecting, for construction that replaced Work that failed to comply with the Contract Documents.

Testing Agency Responsibilities: Cooperate with Architect and Contractor in performance of duties. Provide qualified personnel to perform required tests and inspections.

Notify Architect and Contractor promptly of irregularities or deficiencies observed in the Work during performance of its services.

Determine the location from which test samples will be taken and in which in-situ tests are conducted.

Conduct and interpret tests and inspections and state in each report whether tested and inspected work complies with or deviates from requirements.

Submit a certified written report, in duplicate, of each test, inspection, and similar quality-control service through Contractor.

Do not release, revoke, alter, or increase the Contract Document requirements or approve or accept any portion of the Work.

Do not perform any duties of Contractor.

Associated Services: Cooperate with agencies performing required tests, inspections, and similar quality-control services, and provide reasonable auxiliary services as requested. Notify agency sufficiently in advance of operations to permit assignment of personnel. Provide the following:

Access to the Work.

Incidental labor and facilities necessary to facilitate tests and inspections.

Adequate quantities of representative samples of materials that require testing and inspecting. Assist agency in obtaining samples.

Facilities for storage and field curing of test samples.

Delivery of samples to testing agencies.

Preliminary design mix proposed for use for material mixes that require control by testing agency.

Security and protection for samples and for testing and inspecting equipment at Project site.

Coordination: Coordinate sequence of activities to accommodate required quality-assurance and -control services with a minimum of delay and to avoid necessity of removing and replacing construction to accommodate testing and inspecting.

Schedule times for tests, inspections, obtaining samples, and similar activities.

Schedule of Tests and Inspections: Prepare a schedule of tests, inspections, and similar quality-control services required by the Contract Documents. Submit schedule within 30 days of date established for the Notice to Proceed.

Distribution: Distribute schedule to Owner, Architect, testing agencies, and each party involved in performance of portions of the Work where tests and inspections are required.

SPECIAL TESTS AND INSPECTIONS

Special Tests and Inspections: Conducted by a qualified testing agency as required by authorities having jurisdiction, as indicated in individual Specification Sections, and as follows:

Verifying that manufacturer maintains detailed fabrication and quality-control procedures and reviewing the completeness and adequacy of those procedures to perform the Work.

Notifying Architect and Contractor promptly of irregularities and deficiencies observed in the Work during performance of its services.

Submitting a certified written report of each test, inspection, and similar quality-control service to Architect with copy to Contractor and to authorities having jurisdiction.

Submitting a final report of special tests and inspections at Substantial Completion, which includes a list of unresolved deficiencies.

Interpreting tests and inspections and stating in each report whether tested and inspected work complies with or deviates from the Contract Documents.

Retesting and reinspecting corrected work.

PART 2 - PRODUCTS (NOT USED)

PART 3 - EXECUTION

TEST AND INSPECTION LOG

Prepare a record of tests and inspections. Include the following:

Date test or inspection was conducted.

Description of the Work tested or inspected.

Date test or inspection results were transmitted to Architect.

Identification of testing agency or special inspector conducting test or inspection.

Maintain log at Project site. Post changes and modifications as they occur. Provide access to test and inspection log for Architect's reference during normal working hours.

REPAIR AND PROTECTION

General: On completion of testing, inspecting, sample taking, and similar services, repair damaged construction and restore substrates and finishes.

Provide materials and comply with installation requirements specified in other Specification Sections. Restore patched areas and extend restoration into adjoining areas with durable seams that are as invisible as possible.

Comply with the Contract Document requirements for Division 1 Section "Cutting and Patching."

Protect construction exposed by or for quality-control service activities.

Repair and protection are Contractor's responsibility, regardless of the assignment of responsibility for quality-control services.

END OF SECTION 014000

THIS PAGE INTENTIONALLY BLANK

PART 1 - GENERAL

RELATED DOCUMENTS

Drawings and general provisions of the Contract, including General and Supplementary Conditions and other Division 1 Specification Sections, apply to this Section.

DEFINITIONS

General: Basic Contract definitions are included in the Conditions of the Contract.

"Approved": The term "approved," when used to convey Architect's action on Contractor's submittals, applications, and requests, is limited to Architect's duties and responsibilities as stated in the Conditions of the Contract.

"Directed": Terms such as "directed," "requested," "authorized," "selected," "approved," "required," and "permitted" mean directed by Architect, requested by Architect, and similar phrases.

"Indicated": The term "indicated" refers to graphic representations, notes, or schedules on Drawings or to other paragraphs or schedules in Specifications and similar requirements in the Contract Documents. Terms such as "shown," "noted," "scheduled," and "specified" are used to help the user locate the reference.

"Regulations": The term "regulations" includes laws, ordinances, statutes, and lawful orders issued by authorities having jurisdiction, as well as rules, conventions, and agreements within the construction industry that control performance of the Work.

"Furnish": The term "furnish" means to supply and deliver to Project site, ready for unloading, unpacking, assembly, installation, and similar operations.

"Install": The term "install" describes operations at Project site including unloading, temporarily storing, unpacking, assembling, erecting, placing, anchoring, applying, working to dimension, finishing, curing, protecting, cleaning, and similar operations.

"Provide": The term "provide" means to furnish and install, complete and ready for the intended use.

"Installer": An installer is the Contractor or another entity engaged by Contractor as an employee, Subcontractor, or Sub-subcontractor, to perform a particular construction operation, including installation, erection, application, and similar operations.

The term "experienced," when used with an entity, means having successfully completed a minimum of five previous projects similar in size and scope to this Project; being familiar with special requirements indicated; and having complied with requirements of authorities having jurisdiction.

Using a term such as "carpentry" does not imply that certain construction activities must be performed by accredited or unionized individuals of a corresponding generic name, such as "carpenter." It also does not imply that requirements specified apply exclusively to tradespeople of the corresponding generic name.

"Project site" is the space available for performing construction activities. The extent of Project site is shown on Drawings and may or may not be identical with the description of the land on which Project is to be built.

INDUSTRY STANDARDS

Applicability of Standards: Unless the Contract Documents include more stringent requirements, applicable construction industry standards have the same force and effect as if bound or copied directly into the Contract Documents to the extent referenced. Such standards are made a part of the Contract Documents by reference.

Publication Dates: Comply with standards in effect as of date of the Contract Documents, unless otherwise indicated.

Conflicting Requirements: If compliance with two or more standards is specified and the standards establish different or conflicting requirements for minimum quantities or quality levels, comply with the most stringent requirement. Refer uncertainties and requirements that are different, but apparently equal, to Architect for a decision before proceeding.

Minimum Quantity or Quality Levels: The quantity or quality level shown or specified shall be the minimum provided or performed. The actual installation may comply exactly with the minimum quantity or quality specified, or it may exceed the minimum within reasonable limits. To comply with these requirements, indicated numeric values are minimum or maximum, as appropriate, for the context of requirements. Refer uncertainties to Architect for a decision before proceeding.

Copies of Standards: Each entity engaged in construction on Project must be familiar with industry standards applicable to its construction activity. Copies of applicable standards are not bound with the Contract Documents.

Where copies of standards are needed to perform a required construction activity, obtain copies directly from publication source and make them available on request.

Abbreviations and Acronyms for Industry Organizations: Where abbreviations and acronyms are used in Specifications or other Contract Documents, they shall mean the recognized name of the entities indicated in Gale Research's "Encyclopedia of Associations" or in Columbia Books' "National Trade & Professional Associations of the U.S."

PART 2 - PRODUCTS (NOT USED)

PART 3 - EXECUTION (NOT USED)

END OF SECTION 014200

PART 1 - GENERAL

RELATED DOCUMENTS

Drawings and general provisions of the Contract, including General and Supplementary Conditions and other Division 1 Specification Sections, apply to this Section.

SUMMARY

This Section includes requirements for temporary facilities and controls, including temporary utilities, support facilities, and security and protection facilities.

Temporary utilities include, but are not limited to, the following:

Sanitary facilities, including toilets, wash facilities, and drinking-water facilities.

Electric power service.

Support facilities include, but are not limited to, the following:

Dewatering facilities and drains.

Project identification and temporary signs.

Waste disposal facilities.

Construction aids and miscellaneous services and facilities.

Security and protection facilities include, but are not limited to, the following:

Environmental protection.

Stormwater control.

Tree and plant protection.

Security enclosure and lockup.

Barricades, warning signs, and lights.

Temporary enclosures.

Fire protection.

Related Sections include the following:

Division 1 Section "Submittal Procedures" for procedures for submitting copies of implementation and termination schedule and utility reports.

Division 1 Section "Execution Requirements" for progress cleaning requirements.

Divisions 2 through 33 for temporary heat, ventilation, and humidity requirements for products in those Sections.

DEFINITIONS

Permanent Enclosure: As determined by Architect, permanent roofing is complete, insulated, and weathertight; exterior walls are insulated and weathertight; and all openings are closed with permanent construction or substantial temporary closures.

USE CHARGES

General: Cost or use charges for temporary facilities are not chargeable to Owner or Architect and shall be included in the Contract Sum. Allow other entities to use temporary services and facilities without cost, including, but not limited to, the following:

Owner's construction forces.

Occupants of Project.

Architect.

Testing agencies.

Personnel of authorities having jurisdiction.

Water Service: Use water from Owner's existing water system without metering and without payment of use charges.

Electric Power Service: Use electric 110-volt power from Owner's existing system without metering and without payment of use charges.

QUALITY ASSURANCE

Standards: Comply with ANSI A10.6, NECA's "Temporary Electrical Facilities," and NFPA 241.

Trade Jurisdictions: Assigned responsibilities for installation and operation of temporary utilities are not intended to interfere with trade regulations and union jurisdictions.

PROJECT CONDITIONS

Conditions of Use: The following conditions apply to use of temporary services and facilities by all parties engaged in the Work:

Keep temporary services and facilities clean and neat.

Relocate temporary services and facilities as required by progress of the Work.

PART 2 - PRODUCTS

MATERIALS

General: Provide new materials. Undamaged, previously used materials in serviceable condition may be used if approved by Architect. Provide materials suitable for use intended.

Chain-Link Construction Fencing: Minimum 2-inch, 0.148-inch- thick, galvanized steel, chain-link fabric fencing; minimum 8 feet high with galvanized steel pipe posts; minimum 2-3/8-inch- OD line posts and 2-7/8-inch- OD corner and pull posts, with 1-5/8-inch- OD top rails.

Lumber and Plywood: Comply with requirements in Division 6 Section "Rough Carpentry."

Tarpaulins: Fire-resistive labeled with flame-spread rating of 15 or less.

Water: Potable.

EQUIPMENT

General: Provide equipment suitable for use intended.

Fire Extinguishers: Hand carried, portable, UL rated. Provide class and extinguishing agent as indicated or a combination of extinguishers of NFPA-recommended classes for exposures.

Comply with NFPA 10 and NFPA 241 for classification, extinguishing agent, and size required by location and class of fire exposure.

Electrical Outlets: Properly configured, NEMA-polarized outlets to prevent insertion of 110- to 120-V plugs into higher-voltage outlets; equipped with ground-fault circuit interrupters, reset button, and pilot light.

Power Distribution System Circuits: Where permitted and overhead and exposed for surveillance, wiring circuits, not exceeding 125-V ac, 20-A rating, and lighting circuits may be nonmetallic sheathed cable.

Heating Equipment: Unless Owner authorizes use of permanent heating system, provide vented, self-contained, liquid-propane-gas or fuel-oil heaters with individual space thermostatic control.

Use of gasoline-burning space heaters, open-flame heaters, or salamander-type heating units is prohibited.

Heating Units: Listed and labeled for type of fuel being consumed, by a testing agency acceptable to authorities having jurisdiction, and marked for intended use.

PART 3 - EXECUTION

INSTALLATION, GENERAL

Locate facilities where they will serve Project adequately and result in minimum interference with performance of the Work. Relocate and modify facilities as required.

Provide each facility ready for use when needed to avoid delay. Maintain and modify as required. Do not remove until facilities are no longer needed or are replaced by authorized use of completed permanent facilities.

Sewers and Drainage: Filter out excessive soil, construction debris, chemicals, oils, and similar contaminants that might clog sewers or pollute waterways before discharge.

Water Service: Use of Owner's existing water service facilities will be permitted as directed by Owner, as long as facilities are cleaned and maintained in a condition acceptable to Owner. At Substantial Completion, restore these facilities to condition existing before initial use.

Provide rubber hoses as necessary to serve Project site.

Sanitary Facilities: Provide temporary toilets, wash facilities, and drinking-water fixtures. Comply with regulations and health codes for type, number, location, operation, and maintenance of fixtures and facilities.

Disposable Supplies: Provide toilet tissue, paper towels, paper cups, and similar disposable materials for each facility. Maintain adequate supply. Provide covered waste containers for disposal of used material.

Toilets: Use of Owner's existing toilet facilities will not be permitted.

Toilets: Install self-contained toilet units. Shield toilets to ensure privacy.

Drinking-Water Facilities: Provide bottled-water, drinking-water units.

Electric Power Service: Use of Owner's existing 110 to 120V electric power service will be permitted, as long as equipment is maintained in a condition acceptable to Owner.

Electric Distribution: Provide receptacle outlets adequate for connection of power tools and equipment.

Provide waterproof connectors to connect separate lengths of electrical power cords if single lengths will not reach areas where construction activities are in progress. Do not exceed safe length-voltage ratio.

Provide warning signs at power outlets other than 110 to 120 V.

SUPPORT FACILITIES INSTALLATION

General: Comply with the following:

Locate storage trailers, sanitary facilities, and other temporary construction and support facilities for easy access.

Maintain support facilities until near Substantial Completion. Remove before Substantial Completion. Personnel remaining after Substantial Completion will be permitted to use permanent facilities, under conditions acceptable to Owner.

Traffic Controls: Comply with requirements of authorities having jurisdiction.

Protect existing site improvements to remain including curbs, pavement, and utilities.

Maintain access for fire-fighting equipment and access to fire hydrants.

Dewatering Facilities and Drains: Comply with requirements in applicable Division 2 Sections for temporary drainage and dewatering facilities and operations not directly associated with construction activities included in individual Sections. Where feasible, use same facilities. Maintain Project site, excavations, and construction free of water.

Dispose of rainwater in a lawful manner that will not result in flooding Project or adjoining property nor endanger permanent Work or temporary facilities.

Before connection and operation of permanent drainage piping system, provide temporary drainage where roofing or similar waterproof deck construction is completed.

Remove snow and ice as required to minimize accumulations.

Temporary Signs: Prepare temporary signs to provide directional information to construction personnel and visitors.

Construct signs of exterior-type Grade B-B high-density concrete form overlay plywood in sizes and thicknesses indicated. Support on posts or framing of preservative-treated wood or steel.

Paint sign panel and applied graphics with exterior-grade alkyd gloss enamel over exterior primer.

Waste Disposal Facilities: Provide waste-collection containers in sizes adequate to handle waste from construction operations. Containerize and clearly label hazardous, dangerous, or unsanitary waste materials separately from other waste. Comply with Division 1 Section "Execution Requirements" for progress cleaning requirements.

If required by authorities having jurisdiction, provide separate containers, clearly labeled, for each type of waste material to be deposited.

Develop a waste management plan for Work performed on Project. Indicate types of waste materials Project will produce and estimate quantities of each type. Provide detailed information for on-site waste storage and separation of recyclable materials. Provide information on destination of each type of waste material and means to be used to dispose of all waste materials.

SECURITY AND PROTECTION FACILITIES INSTALLATION

Environmental Protection: Provide protection, operate temporary facilities, and conduct construction in ways and by methods that comply with environmental regulations and that minimize possible air, waterway, and subsoil contamination or pollution or other undesirable effects. Avoid using tools and equipment that produce harmful noise. Restrict use of noisemaking tools and equipment to hours that will minimize complaints from persons or firms near Project site.

Temporary Erosion and Sedimentation Control: Provide measures to prevent soil erosion and discharge of soil-bearing water runoff and airborne dust to adjacent properties and walkways, according to requirements of authorities having jurisdiction.

Inspect, repair, and maintain erosion- and sedimentation-control measures during construction until permanent vegetation has been established.

Stormwater Control: Comply with authorities having jurisdiction. Provide barriers in and around excavations and subgrade construction to prevent flooding by runoff of stormwater from heavy rains.

Storage: The Authority can provide no secure on-site storage for the contractor's material and equipment. The Authority will assume no responsibility for losses or damage to materials or equipment stored on site.

Protection Fence: Where necessary to protect the public from construction operations and open excavations, install chain-link enclosure fence or other suitable barricades with lockable gates. Enclose construction area determined sufficient to accommodate construction operations. Install in a manner that will prevent people, dogs, and other animals from easily entering construction areas except by entrance gates.

Set fence posts in compacted mixture of gravel and earth. Provide portable concrete or steel bases at posts located in existing paved areas.

Provide gates in sizes and at locations necessary to accommodate delivery vehicles and other construction operations.

Maintain security by limiting number of keys and restricting distribution to authorized personnel. Provide Owner with one set of keys.

Security Enclosure and Lockup: Install substantial temporary enclosure around partially completed areas of construction. Provide lockable entrances to prevent unauthorized entrance, vandalism, theft, and similar violations of security.

Barricades, Warning Signs, and Lights: Comply with standards and code requirements for erecting structurally adequate barricades. Paint with appropriate colors, graphics, and warning signs to inform personnel and public of possible hazard. Where appropriate and needed, provide lighting, including flashing red or amber lights.

For safety barriers and similar uses, provide minimum 5/8-inch- thick exterior plywood.

Temporary Enclosures: Provide temporary enclosures for protection of construction, in progress and completed, from exposure, foul weather, other construction operations, and similar activities. Provide temporary weathertight enclosure for building exterior.

Vertical Openings: Close openings of 25 sq. ft. or less with plywood or similar materials.

Horizontal Openings: Close openings in floor or roof decks and horizontal surfaces with load-bearing, wood-framed construction.

Install tarpaulins securely using fire-retardant-treated wood framing and other materials.

Temporary Fire Protection: Until fire-protection needs are supplied by permanent facilities, install and maintain temporary fire-protection facilities of types needed to protect against reasonably predictable and controllable fire losses. Comply with NFPA 241.

Provide fire extinguishers visible and accessible from space being served.

All Locations: Class ABC dry-chemical extinguishers or a combination of extinguishers of NFPA-recommended classes for exposures.

Locate fire extinguishers where convenient and effective for their intended purpose; provide not less than one extinguisher on each floor at or near each usable stairwell.

Store combustible materials in containers in fire-safe locations.

Maintain unobstructed access to fire extinguishers. Prohibit smoking in hazardous fire-exposure areas.

Supervise welding operations, combustion-type temporary heating units, and similar sources of fire ignition.

OPERATION, TERMINATION, AND REMOVAL

Existing Finishes to Remain: Provide temporary protection of existing finishes or equipment when transporting debris or building materials. Repair or replace finishes or equipment which have become damaged as a result of Contractor's operations.

Supervision: Enforce strict discipline in use of temporary facilities. To minimize waste and abuse, limit availability of temporary facilities to essential and intended uses.

Maintenance: Maintain facilities in good operating condition until removal. Protect from damage caused by freezing temperatures and similar elements.

Maintain operation of temporary enclosures, heating, cooling, humidity control, ventilation, and similar facilities on a 24-hour basis where required to achieve indicated results and to avoid possibility of damage.

Prevent water-filled piping from freezing. Maintain markers for underground lines. Protect from damage during excavation operations.

Temporary Facility Changeover: Do not change over from using temporary security and protection facilities to permanent facilities until Substantial Completion.

Termination and Removal: Remove each temporary facility when need for its service has ended, when it has been replaced by authorized use of a permanent facility, or no later than Substantial Completion. Complete or, if necessary, restore permanent construction that may have been delayed because of interference with temporary facility. Repair damaged Work, clean exposed surfaces, and replace construction that cannot be satisfactorily repaired.

Materials and facilities that constitute temporary facilities are the property of Contractor. Owner reserves right to take possession of Project identification signs.

At Substantial Completion, clean and renovate permanent facilities used during construction period. Comply with final cleaning requirements in Division 1 Section "Closeout Procedures."

END OF SECTION 015000

THIS PAGE INTENTIONALLY BLANK

PART 1 - GENERAL

RELATED DOCUMENTS

Drawings and general provisions of the Contract, including General and Supplementary Conditions and other Division 1 Specification Sections, apply to this Section.

SUMMARY

This Section includes administrative and procedural requirements for selection of products for use in Project; product delivery, storage, and handling; manufacturers' standard warranties on products; special warranties; product substitutions; and comparable products.

Related Sections include the following:

Division 1 Section "Closeout Procedures" for submitting warranties for Contract closeout.

Divisions 2 through 33 Sections for specific requirements for warranties on products and installations specified to be warranted.

DEFINITIONS

Products: Items purchased for incorporating into the Work, whether purchased for Project or taken from previously purchased stock. The term "product" includes the terms "material," "equipment," "system," and terms of similar intent.

Named Products: Items identified by manufacturer's product name, including make or model number or other designation shown or listed in manufacturer's published product literature that is current as of date of the Contract Documents.

New Products: Items that have not previously been incorporated into another project or facility, except that products consisting of recycled-content materials are allowed, unless explicitly stated otherwise. Products salvaged or recycled from other projects are not considered new products.

Comparable Product: Product that is demonstrated and approved through submittal process, or where indicated as a product substitution, to have the indicated qualities related to type, function, dimension, in-service performance, physical properties, appearance, and other characteristics that equal or exceed those of specified product.

Substitutions: Changes in products, materials, equipment, and methods of construction from those required by the Contract Documents and proposed by Contractor.

Basis-of-Design Product Specification: Where a specific manufacturer's product is named and accompanied by the words "basis of design," including make or model number or other designation, to establish the significant qualities related to type, function, dimension, in-service performance, physical properties, appearance, and other characteristics for purposes of evaluating comparable products of other named manufacturers.

SUBMITTALS

Product List: Submit a list, in tabular from, showing specified products. Include generic names of products required. Include manufacturer's name and proprietary product names for each product.

Coordinate product list with Contractor's Construction Schedule and the Submittals Schedule.

Form: Tabulate information for each product under the following column headings:

Specification Section number and title.
Generic name used in the Contract Documents.
Proprietary name, model number, and similar designations.
Manufacturer's name and address.
Supplier's name and address.
Installer's name and address.
Projected delivery date or time span of delivery period.
Identification of items that require early submittal approval for scheduled delivery date.

Completed List: Within 60 days after date of commencement of the Work, submit 2 copies of completed product list. Include a written explanation for omissions of data and for variations from Contract requirements.

Architect's Action: Architect will respond in writing to Contractor within 15 days of receipt of completed product list. Architect's response will include a list of unacceptable product selections and a brief explanation of reasons for this action. Architect's response, or lack of response, does not constitute a waiver of requirement to comply with the Contract Documents.

Substitution Requests: Submit three copies of each request for consideration. Identify product or fabrication or installation method to be replaced. Include Specification Section number and title and Drawing numbers and titles.

Documentation: Show compliance with requirements for substitutions and the following, as applicable:

Statement indicating why specified material or product cannot be provided.

Coordination information, including a list of changes or modifications needed to other parts of the Work and to construction performed by Owner and separate contractors that will be necessary to accommodate proposed substitution.

Detailed comparison of significant qualities of proposed substitution with those of the Work specified. Significant qualities may include attributes such as performance, weight, size, durability, visual effect, and specific features and requirements indicated.

Product Data, including drawings and descriptions of products and fabrication and installation procedures.

Samples, where applicable or requested.

Material test reports from a qualified testing agency indicating and interpreting test results for compliance with requirements indicated.

Research/evaluation reports evidencing compliance with building code in effect for Project, from a model code organization acceptable to authorities having jurisdiction.

Cost information, including a proposal of change, if any, in the Contract Sum.

Contractor's certification that proposed substitution complies with requirements in the Contract Documents and is appropriate for applications indicated.

Architect's Action: If necessary, Architect will request additional information or documentation for evaluation within 7 days of receipt of a request for substitution. Architect will notify Contractor of ac-

ceptance or rejection of proposed substitution within 15 days of receipt of request, or 7 days of receipt of additional information or documentation, whichever is later.

Form of Acceptance: Change Order.

Use product specified if Architect cannot make a decision on use of a proposed substitution within time allocated.

Comparable Product Requests: Submit three copies of each request for consideration. Identify product or fabrication or installation method to be replaced. Include Specification Section number and title and Drawing numbers and titles.

Architect's Action: If necessary, Architect will request additional information or documentation for evaluation within one week of receipt of a comparable product request. Architect will notify Contractor of approval or rejection of proposed comparable product request within 15 days of receipt of request, or 7 days of receipt of additional information or documentation, whichever is later.

Form of Approval: As specified in Division 1 Section "Submittal Procedures."

Use product specified if Architect cannot make a decision on use of a comparable product request within time allocated.

Basis-of-Design Product Specification Submittal: Comply with requirements in Division 1 Section "Submittal Procedures." Show compliance with requirements.

PRODUCT DELIVERY, STORAGE, AND HANDLING

Deliver, store, and handle products using means and methods that will prevent damage, deterioration, and loss, including theft. Comply with manufacturer's written instructions.

Delivery and Handling:

Schedule delivery to minimize long-term storage at Project site and to prevent overcrowding of construction spaces.

Coordinate delivery with installation time to ensure minimum holding time for items that are flammable, hazardous, easily damaged, or sensitive to deterioration, theft, and other losses.

Deliver products to Project site in an undamaged condition in manufacturer's original sealed container or other packaging system, complete with labels and instructions for handling, storing, unpacking, protecting, and installing.

Inspect products on delivery to ensure compliance with the Contract Documents and to ensure that products are undamaged and properly protected.

Storage:

Store products to allow for inspection and measurement of quantity or counting of units.

Store materials in a manner that will not endanger Project structure.

Store products that are subject to damage by the elements, under cover in a weathertight enclosure above ground, with ventilation adequate to prevent condensation.

Store cementitious products and materials on elevated platforms.

Store foam plastic from exposure to sunlight, except to extent necessary for period of installation and concealment.

Comply with product manufacturer's written instructions for temperature, humidity, ventilation, and weather-protection requirements for storage.

Protect stored products from damage and liquids from freezing.

Provide a secure location and enclosure at Project site for storage of materials and equipment by Owner's construction forces. Coordinate location with Owner.

PRODUCT WARRANTIES

Warranties specified in other Sections shall be in addition to, and run concurrent with, other warranties required by the Contract Documents. Manufacturer's disclaimers and limitations on product warranties do not relieve Contractor of obligations under requirements of the Contract Documents.

Manufacturer's Warranty: Preprinted written warranty published by individual manufacturer for a particular product and specifically endorsed by manufacturer to Owner.

Special Warranty: Written warranty required by or incorporated into the Contract Documents, either to extend time limit provided by manufacturer's warranty or to provide more rights for Owner.

Special Warranties: Prepare a written document that contains appropriate terms and identification, ready for execution. Submit a draft for approval before final execution.

Refer to Divisions 2 through 33 Sections for specific content requirements and particular requirements for submitting special warranties.

Submittal Time: Comply with requirements in Division 1 Section "Closeout Procedures."

PART 2 - PRODUCTS

PRODUCT SELECTION PROCEDURES

General Product Requirements: Provide products that comply with the Contract Documents, that are undamaged and, unless otherwise indicated, that are new at time of installation.

Provide products complete with accessories, trim, finish, fasteners, and other items needed for a complete installation and indicated use and effect.

Standard Products: If available, and unless custom products or nonstandard options are specified, provide standard products of types that have been produced and used successfully in similar situations on other projects.

Where products are accompanied by the term "as selected," Architect will make selection.

Descriptive, performance, and reference standard requirements in the Specifications establish "salient characteristics" of products.

Or Equal: Where products are specified by name and accompanied by the term "or equal" or "or approved equal" or "or approved," comply with provisions in Part 2 "Comparable Products" Article to obtain approval for use of an unnamed product.

Product Selection Procedures:

Available Products: Where Specifications include a list of names of both products and manufacturers, provide one of the products listed, or an unnamed product, that complies with requirements. Comply with provisions in Part 2 "Comparable Products" Article for consideration of an unnamed product.

Available Manufacturers: Where Specifications include a list of manufacturers, provide a product by one of the manufacturers listed, or an unnamed manufacturer, that complies with requirements. Comply with provisions in Part 2 "Comparable Products" Article for consideration of an unnamed product.

Basis-of-Design Product: Where Specifications name a product and include a list of manufacturers, provide the specified product or a comparable product by one of the other named manufacturers. Drawings and Specifications indicate sizes, profiles, dimensions, and other characteristics that are based on the product named. Comply with provisions in Part 2 "Comparable Products" Article for consideration of an unnamed product by the other named manufacturers.

PRODUCT SUBSTITUTIONS

Timing: Architect will consider requests for substitution if received within 60 days after commencement of the Work. Requests received after that time may be considered or rejected at discretion of Architect.

Conditions: Architect will consider Contractor's request for substitution when the following conditions are satisfied. If the following conditions are not satisfied, Architect will return requests without action, except to record noncompliance with these requirements:

Requested substitution offers Owner a substantial advantage in cost, time, energy conservation, or other considerations, after deducting additional responsibilities Owner must assume. Owner's additional responsibilities may include compensation to Architect for redesign and evaluation services, increased cost of other construction by Owner, and similar considerations.

Requested substitution does not require extensive revisions to the Contract Documents.

Requested substitution is consistent with the Contract Documents and will produce indicated results.

Substitution request is fully documented and properly submitted.

Requested substitution will not adversely affect Contractor's Construction Schedule.

Requested substitution has received necessary approvals of authorities having jurisdiction.

Requested substitution is compatible with other portions of the Work.

Requested substitution has been coordinated with other portions of the Work.

Requested substitution provides specified warranty.

If requested substitution involves more than one contractor, requested substitution has been coordinated with other portions of the Work, is uniform and consistent, is compatible with other products, and is acceptable to all contractors involved.

COMPARABLE PRODUCTS

Conditions: Architect will consider Contractor's request for comparable product when the following conditions are satisfied. If the following conditions are not satisfied, Architect will return requests without action, except to record noncompliance with these requirements:

Evidence that the proposed product does not require extensive revisions to the Contract Documents, that it is consistent with the Contract Documents and will produce the indicated results, and that it is compatible with other portions of the Work.

Detailed comparison of significant qualities of proposed product with those named in the Specifications. Significant qualities include attributes such as performance, weight, size, durability, visual effect, and specific features and requirements indicated.

Evidence that proposed product provides specified warranty.

List of similar installations for completed projects with project names and addresses and names and addresses of architects and owners, if requested.

Samples, if requested.

PART 3 - EXECUTION (NOT USED)

END OF SECTION 016000

PART 1 - GENERAL

RELATED DOCUMENTS

Drawings and general provisions of the Contract, including General and Supplementary Conditions and other Division 1 Specification Sections, apply to this Section.

SUMMARY

This Section includes general procedural requirements governing execution of the Work including, but not limited to, the following:

Construction layout.
Field engineering and surveying.
General installation of products.
Coordination of Owner-installed products.
Progress cleaning.
Starting and adjusting.
Protection of installed construction.
Correction of the Work.

Related Sections include the following:

Division 1 Section "Project Management and Coordination" for procedures for coordinating field engineering with other construction activities.

Division 1 Section "Submittal Procedures" for submitting surveys.

Division 1 Section "Cutting and Patching" for procedural requirements for cutting and patching necessary for the installation or performance of other components of the Work.

Division 1 Section "Closeout Procedures" for submitting final property survey with Project Record Documents, recording of Owner-accepted deviations from indicated lines and levels, and final cleaning.

SUBMITTALS

Qualification Data: For land surveyor.

Certificates: Submit certificate signed by land surveyor certifying that location and elevation of improvements comply with requirements.

Landfill Receipts: Submit copy of receipts issued by a landfill facility, licensed to accept hazardous materials, for hazardous waste disposal.

autotroph
architecture.planning.sustainable design consulting
617 B Paulin St. Santa Fe, NM 87505

PART 2 - PRODUCTS (NOT USED)

PART 3 - EXECUTION

EXAMINATION

Existing Conditions: The existence and location of site improvements, utilities, and other construction indicated as existing are not guaranteed. Before beginning work, investigate and verify the existence and location of mechanical and electrical systems and other construction affecting the Work.

Before construction, verify the location and points of connection of utility services.

Existing Utilities: The existence and location of underground and other utilities and construction indicated as existing are not guaranteed. Before beginning sitework, investigate and verify the existence and location of underground utilities and other construction affecting the Work.

Before construction, verify the location and invert elevation at points of connection of sanitary sewer, storm sewer, and water-service piping; and underground electrical services.

Furnish location data for work related to Project that must be performed by public utilities serving Project site.

Acceptance of Conditions: Examine substrates, areas, and conditions, with Installer or Applicator present where indicated, for compliance with requirements for installation tolerances and other conditions affecting performance. Record observations.

Verify compatibility with and suitability of substrates, including compatibility with existing finishes or primers.

Examine roughing-in for mechanical and electrical systems to verify actual locations of connections before equipment and fixture installation.

Examine walls, floors, and roofs for suitable conditions where products and systems are to be installed.

Proceed with installation only after unsatisfactory conditions have been corrected. Proceeding with the Work indicates acceptance of surfaces and conditions.

PREPARATION

Existing Utility Information: Furnish information to local utility and Owner that is necessary to adjust, move, or relocate existing utility structures, utility poles, lines, services, or other utility appurtenances located in or affected by construction. Coordinate with authorities having jurisdiction.

Field Measurements: Take field measurements as required to fit the Work properly. Recheck measurements before installing each product. Where portions of the Work are indicated to fit to other construction, verify dimensions of other construction by field measurements before fabrication. Coordinate fabrication schedule with construction progress to avoid delaying the Work.

Space Requirements: Verify space requirements and dimensions of items shown diagrammatically on Drawings.

Review of Contract Documents and Field Conditions: Immediately on discovery of the need for clarification of the Contract Documents, submit a request for information to Architect. Include a detailed description of problem encountered, together with recommendations for changing the Contract Documents.

CONSTRUCTION LAYOUT

Verification: Before proceeding to lay out the Work, verify layout information shown on Drawings, in relation to the property survey and existing benchmarks. If discrepancies are discovered, notify Architect promptly.

General: Engage a land surveyor to lay out the Work using accepted surveying practices.

Establish benchmarks and control points to set lines and levels at each story of construction and elsewhere as needed to locate each element of Project.

Do not scale Drawings to obtain required dimensions.

Inform installers of lines and levels to which they must comply.

Check the location, level and plumb, of every major element as the Work progresses.

Notify Architect when deviations from required lines and levels exceed allowable tolerances.

Close site surveys with an error of closure equal to or less than the standard established by authorities having jurisdiction.

Site Improvements: Locate and lay out site improvements, including pavements, grading, fill and topsoil placement.

Building Lines and Levels: Locate and lay out control lines and levels for structures, building foundations, column grids, and floor levels, including those required for mechanical and electrical work. Transfer survey markings and elevations for use with control lines and levels. Level foundations and piers from two or more locations.

INSTALLATION

General: Locate the Work and components of the Work accurately, in correct alignment and elevation, as indicated.

Make vertical work plumb and make horizontal work level.

Where space is limited, install components to maximize space available for maintenance and ease of removal for replacement.

Conceal pipes, ducts, and wiring in finished areas, unless otherwise indicated.

Comply with manufacturer's written instructions and recommendations for installing products in applications indicated.

Install products at the time and under conditions that will ensure the best possible results. Maintain conditions required for product performance until Substantial Completion.

Conduct construction operations so no part of the Work is subjected to damaging operations or loading in excess of that expected during normal conditions of occupancy.

Tools and Equipment: Do not use tools or equipment that produce harmful noise levels.

Templates: Obtain and distribute to the parties involved templates for work specified to be factory prepared and field installed. Check Shop Drawings of other work to confirm that adequate provisions are made for locating and installing products to comply with indicated requirements.

Anchors and Fasteners: Provide anchors and fasteners as required to anchor each component securely in place, accurately located and aligned with other portions of the Work.

Mounting Heights: Where mounting heights are not indicated, mount components at heights directed by Architect.

Allow for building movement, including thermal expansion and contraction.

Coordinate installation of anchorages. Furnish setting drawings, templates, and directions for installing anchorages, including sleeves, concrete inserts, anchor bolts, and items with integral anchors, that are to be embedded in concrete or masonry. Deliver such items to Project site in time for installation.

Joints: Make joints of uniform width. Where joint locations in exposed work are not indicated, arrange joints for the best visual effect. Fit exposed connections together to form hairline joints.

Hazardous Materials: Use products, cleaners, and installation materials that are not considered hazardous.

PROGRESS CLEANING

General: Clean Project site and work areas daily, including common areas. Coordinate progress cleaning for joint-use areas where more than one installer has worked. Enforce requirements strictly. Dispose of materials lawfully.

Comply with requirements in NFPA 241 for removal of combustible waste materials and debris.

Do not hold materials more than 7 days during normal weather or 3 days if the temperature is expected to rise above 80 deg F.

Containerize hazardous and unsanitary waste materials separately from other waste. Mark containers appropriately and dispose of legally, according to regulations.

Site: Maintain Project site free of waste materials and debris.

Work Areas: Clean areas where work is in progress to the level of cleanliness necessary for proper execution of the Work.

Remove liquid spills promptly.

Where dust would impair proper execution of the Work, broom-clean or vacuum the entire work area, as appropriate.

Installed Work: Keep installed work clean. Clean installed surfaces according to written instructions of manufacturer or fabricator of product installed, using only cleaning materials specifically recommended. If specific cleaning materials are not recommended, use cleaning materials that are not hazardous to health or property and that will not damage exposed surfaces.

Concealed Spaces: Remove debris from concealed spaces before enclosing the space.

Exposed Surfaces in Finished Areas: Clean exposed surfaces and protect as necessary to ensure freedom from damage and deterioration at time of Substantial Completion.

Waste Disposal: Burying or burning waste materials on-site will not be permitted. Washing waste materials down sewers or into waterways will not be permitted.

During handling and installation, clean and protect construction in progress and adjoining materials already in place. Apply protective covering where required to ensure protection from damage or deterioration at Substantial Completion.

Clean and provide maintenance on completed construction as frequently as necessary through the remainder of the construction period. Adjust and lubricate operable components to ensure operability without damaging effects.

Limiting Exposures: Supervise construction operations to assure that no part of the construction, completed or in progress, is subject to harmful, dangerous, damaging, or otherwise deleterious exposure during the construction period.

STARTING AND ADJUSTING

Start equipment and operating components to confirm proper operation. Remove malfunctioning units, replace with new units, and retest.

Adjust operating components for proper operation without binding. Adjust equipment for proper operation.

Test each piece of equipment to verify proper operation. Test and adjust controls and safeties. Replace damaged and malfunctioning controls and equipment.

Manufacturer's Field Service: If a factory-authorized service representative is required to inspect field-assembled components and equipment installation, comply with qualification requirements in Division 1 Section "Quality Requirements."

PROTECTION OF INSTALLED CONSTRUCTION

Provide final protection and maintain conditions that ensure installed Work is without damage or deterioration at time of Substantial Completion.

Comply with manufacturer's written instructions for temperature and relative humidity.

CORRECTION OF THE WORK

Repair or remove and replace defective construction. Restore damaged substrates and finishes. Comply with requirements in Division 1 Section "Cutting and Patching."

> Repairing includes replacing defective parts, refinishing damaged surfaces, touching up with matching materials, and properly adjusting operating equipment.

Restore permanent facilities used during construction to their specified condition.

Remove and replace damaged surfaces that are exposed to view if surfaces cannot be repaired without visible evidence of repair.

Repair components that do not operate properly. Remove and replace operating components that cannot be repaired.

Remove and replace chipped, scratched, and broken glass or reflective surfaces.

END OF SECTION 017000

autotroph
architecture.planning.sustainable design consulting
617 B Paulin St. Santa Fe, NM 87505

THIS PAGE INTENTIONALLY BLANK

PART 1 - GENERAL

RELATED DOCUMENTS

Drawings and general provisions of the Contract, including General and Supplementary Conditions and other Division 1 Specification Sections, apply to this Section.

SUMMARY

This Section includes procedural requirements for cutting and patching.

Related Sections include the following:

Division 1 Section "Selective Demolition" for demolition of selected portions of the building.

Divisions 2 through 33 Sections for specific requirements and limitations applicable to cutting and patching individual parts of the Work.

DEFINITIONS

Cutting: Removal of in-place construction necessary to permit installation or performance of other Work.

Patching: Fitting and repair work required to restore surfaces to original conditions after installation of other Work.

QUALITY ASSURANCE

Structural Elements: Do not cut and patch structural elements in a manner that could change their load-carrying capacity or load-deflection ratio.

Operational Elements: Do not cut and patch operating elements and related components in a manner that results in reducing their capacity to perform as intended or that results in increased maintenance or decreased operational life or safety. Operating elements include the following:

Primary operational systems and equipment.
Fire-suppression systems.
Mechanical systems piping and ducts.
Control systems.
Communication systems.
Electrical wiring systems.

Miscellaneous Elements: Do not cut and patch miscellaneous elements or related components in a manner that could change their load-carrying capacity, that results in reducing their capacity to perform as intended, or that results in increased maintenance or decreased operational life or safety. Miscellaneous elements include the following:

Water, moisture, or vapor barriers.
Membranes and flashings.
Exterior storefront construction.
Equipment supports.
Piping, ductwork, vessels, and equipment.
Noise- and vibration-control elements and systems.

autotroph
architecture.planning.sustainable design consulting
617 B Paulin St. Santa Fe, NM 87505

Visual Requirements: Do not cut and patch construction in a manner that results in visual evidence of cutting and patching. Do not cut and patch construction exposed on the exterior or in occupied spaces in a manner that would, in Architect's opinion, reduce the building's aesthetic qualities. Remove and replace construction that has been cut and patched in a visually unsatisfactory manner.

WARRANTY

Existing Warranties: Remove, replace, patch, and repair materials and surfaces cut or damaged during cutting and patching operations, by methods and with materials so as not to void existing warranties.

PART 2 - PRODUCTS

MATERIALS

General: Comply with requirements specified in other Sections.

In-Place Materials: Use materials identical to in-place materials. For exposed surfaces, use materials that visually match in-place adjacent surfaces to the fullest extent possible.

If identical materials are unavailable or cannot be used, use materials that, when installed, will match the visual and functional performance of in-place materials.

PART 3 - EXECUTION

EXAMINATION

Examine surfaces to be cut and patched and conditions under which cutting and patching are to be performed.

Compatibility: Before patching, verify compatibility with and suitability of substrates, including compatibility with in-place finishes or primers.

Proceed with installation only after unsafe or unsatisfactory conditions have been corrected.

PREPARATION

Temporary Support: Provide temporary support of Work to be cut.

Protection: Protect in-place construction during cutting and patching to prevent damage. Provide protection from adverse weather conditions for portions of Project that might be exposed during cutting and patching operations.

Adjoining Areas: Avoid interference with use of adjoining areas or interruption of free passage to adjoining areas.

Existing Utility Services and Mechanical/Electrical Systems: Where existing services/systems are required to be removed, relocated, or abandoned, bypass such services/systems before cutting to minimize interruption to occupied areas.

autotroph
architecture.planning.sustainable design consulting
617 B Paulin St. Santa Fe, NM 87505

PERFORMANCE

General: Employ skilled workers to perform cutting and patching. Proceed with cutting and patching at the earliest feasible time, and complete without delay.

Cut in-place construction to provide for installation of other components or performance of other construction, and subsequently patch as required to restore surfaces to their original condition.

Cutting: Cut in-place construction by sawing, drilling, breaking, chipping, grinding, and similar operations, including excavation, using methods least likely to damage elements retained or adjoining construction. If possible, review proposed procedures with original Installer; comply with original Installer's written recommendations.

In general, use hand or small power tools designed for sawing and grinding, not hammering and chopping. Cut holes and slots as small as possible, neatly to size required, and with minimum disturbance of adjacent surfaces. Temporarily cover openings when not in use.

Finished Surfaces: Cut or drill from the exposed or finished side into concealed surfaces.

Concrete and Masonry: Cut using a cutting machine, such as an abrasive saw or a diamond-core drill.

Excavating and Backfilling: Comply with requirements in applicable Division 2 Sections where required by cutting and patching operations.

Mechanical and Electrical Services: Cut off pipe or conduit in walls or partitions to be removed. Cap, valve, or plug and seal remaining portion of pipe or conduit to prevent entrance of moisture or other foreign matter after cutting.

Proceed with patching after construction operations requiring cutting are complete.

Patching: Patch construction by filling, repairing, refinishing, closing up, and similar operations following performance of other Work. Patch with durable seams that are as invisible as possible. Provide materials and comply with installation requirements specified in other Sections.

Inspection: Where feasible, test and inspect patched areas after completion to demonstrate integrity of installation.

Exposed Finishes: Restore exposed finishes of patched areas and extend finish restoration into retained adjoining construction in a manner that will eliminate evidence of patching and refinishing.

Clean piping, conduit, and similar features before applying paint or other finishing materials.

Restore damaged pipe covering to its original condition.

Floors and Walls: Where walls or partitions that are removed extend one finished area into another, patch and repair floor and wall surfaces in the new space. Provide an even surface of uniform finish, color, texture, and appearance. Remove in-place floor and wall coverings and replace with new materials, if necessary, to achieve uniform color and appearance.

Where patching occurs in a painted surface, apply primer and intermediate paint coats over the patch and apply final paint coat over entire unbroken surface containing the patch. Provide additional coats until patch blends with adjacent surfaces.

Ceilings: Patch, repair, or rehang in-place ceilings as necessary to provide an even-plane surface of uniform appearance.

Exterior Building Enclosure: Patch components in a manner that restores enclosure to a weathertight condition.

Cleaning: Clean areas and spaces where cutting and patching are performed. Completely remove paint, mortar, oils, putty, and similar materials.

END OF SECTION 017310

PART 1 - GENERAL

RELATED DOCUMENTS

Drawings and general provisions of the Contract, including General and Supplementary Conditions and other Division 1 Specification Sections, apply to this Section.

SUMMARY

This Section includes administrative and procedural requirements for contract closeout, including, but not limited to, the following:

Inspection procedures.
Warranties.
Final cleaning.

Related Sections include the following:

Division 1 Section "Payment Procedures" for requirements for Applications for Payment for Substantial and Final Completion.

Division 1 Section "Execution Requirements" for progress cleaning of Project site.

Division 1 Section "Project Record Documents" for submitting Record Drawings, Record Specifications, and Record Product Data.

Division 1 Section "Operation and Maintenance Data" for operation and maintenance manual requirements.

Divisions 2 through 33 Sections for specific closeout and special cleaning requirements for the Work in those Sections.

SUBSTANTIAL COMPLETION

Preliminary Procedures: Before requesting inspection for determining date of Substantial Completion, complete the following. List items below that are incomplete in request.

Prepare a list of items to be completed and corrected (punch list), the value of items on the list, and reasons why the Work is not complete.

Advise Owner of pending insurance changeover requirements.

Submit specific warranties, workmanship bonds, maintenance service agreements, final certifications, and similar documents.

Obtain and submit releases permitting Owner unrestricted use of the Work and access to services and utilities. Include occupancy permits, operating certificates, and similar releases.

Prepare and submit Project Record Documents, operation and maintenance manuals, Final Completion construction photographs, damage or settlement surveys, property surveys, and similar final record information.

Deliver tools, spare parts, extra materials, and similar items to location designated by Owner. Label with manufacturer's name and model number where applicable.

autotroph
architecture.planning.sustainable design consulting
617 B Paulin St. Santa Fe, NM 87505

Make final changeover of permanent locks and deliver keys to Owner. Advise Owner's personnel of changeover in security provisions.

Complete startup testing of systems.

Submit test/adjust/balance records.

Terminate and remove temporary facilities from Project site, along with mockups, construction tools, and similar elements.

Submit changeover information related to Owner's occupancy, use, operation, and maintenance.

Complete final cleaning requirements, including touchup painting.

Touch up and otherwise repair and restore marred exposed finishes to eliminate visual defects.

Inspection: Submit a written request for inspection for Substantial Completion. On receipt of request, Architect will either proceed with inspection or notify Contractor of unfulfilled requirements. Architect will prepare the Certificate of Substantial Completion after inspection or will notify Contractor of items, either on Contractor's list or additional items identified by Architect, that must be completed or corrected before certificate will be issued.

Reinspection: Request reinspection when the Work identified in previous inspections as incomplete is completed or corrected.

Results of completed inspection will form the basis of requirements for Final Completion.

FINAL COMPLETION

Preliminary Procedures: Before requesting final inspection for determining date of Final Completion, complete the following:

Submit a final Application for Payment according to Division 1 Section "Payment Procedures."

Submit certified copy of Architect's Substantial Completion inspection list of items to be completed or corrected (punch list), endorsed and dated by Architect. The certified copy of the list shall state that each item has been completed or otherwise resolved for acceptance.

Submit evidence of final, continuing insurance coverage complying with insurance requirements.

Submit pest-control final inspection report and warranty.

Instruct Owner's personnel in operation, adjustment, and maintenance of products, equipment, and systems.

Inspection: Submit a written request for final inspection for acceptance. On receipt of request, Architect will either proceed with inspection or notify Contractor of unfulfilled requirements. Architect will prepare a final Certificate for Payment after inspection or will notify Contractor of construction that must be completed or corrected before certificate will be issued.

Reinspection: Request reinspection when the Work identified in previous inspections as incomplete is completed or corrected.

LIST OF INCOMPLETE ITEMS (PUNCH LIST)

Preparation: Submit three copies of list. Include name and identification of each space and area affected by construction operations for incomplete items and items needing correction including, if necessary, areas disturbed by Contractor that are outside the limits of construction.

Organize list of spaces in sequential order, starting with exterior areas first and proceeding from lowest floor to highest floor.

Organize items applying to each space by major element, including categories for ceiling, individual walls, floors, equipment, and building systems.

Include the following information at the top of each page:

Project name.
Date.
Name of Architect.
Name of Contractor.
Page number.

WARRANTIES

Submittal Time: Submit written warranties on request of Architect for designated portions of the Work where commencement of warranties other than date of Substantial Completion is indicated.

Partial Occupancy: Submit properly executed warranties within 15 days of completion of designated phases of the Work that are completed and occupied or used by Owner during construction period by separate agreement with Contractor.

Organize warranty documents into an orderly sequence based on the table of contents of the Project Manual.

Bind warranties and bonds in heavy-duty, 3-ring, vinyl-covered, loose-leaf binders, thickness as necessary to accommodate contents, and sized to receive 8-1/2-by-11-inch (215-by-280-mm) paper.

Provide heavy paper dividers with plastic-covered tabs for each separate warranty. Mark tab to identify the product or installation. Provide a typed description of the product or installation, including the name of the product and the name, address, and telephone number of Installer.

Identify each binder on the front and spine with the typed or printed title "WARRANTIES," Project name, and name of Contractor.

Provide additional copies of each warranty to include in operation and maintenance manuals.

PART 2 - PRODUCTS

MATERIALS

Cleaning Agents: Use cleaning materials and agents recommended by manufacturer or fabricator of the surface to be cleaned. Do not use cleaning agents that are potentially hazardous to health or property or that might damage finished surfaces.

PART 3 - EXECUTION

FINAL CLEANING

General: Provide final cleaning. Conduct cleaning and waste-removal operations to comply with local laws and ordinances and Federal and local environmental and antipollution regulations.

Cleaning: Employ experienced workers or professional cleaners for final cleaning. Clean each surface or unit to condition expected in an average commercial building cleaning and maintenance program. Comply with manufacturer's written instructions.

Complete the following cleaning operations before requesting inspection for certification of Substantial Completion for entire Project or for a portion of Project:

Clean Project site, yard, and grounds, in areas disturbed by construction activities, including landscape development areas, of rubbish, waste material, litter, and other foreign substances.

Sweep paved areas broom clean. Remove petrochemical spills, stains, and other foreign deposits.

Rake grounds that are neither planted nor paved to a smooth, even-textured surface.

Remove tools, construction equipment, machinery, and surplus material from Project site.

Remove snow and ice to provide safe access to building.

Clean exposed exterior and interior hard-surfaced finishes to a dirt-free condition, free of stains, films, and similar foreign substances. Avoid disturbing natural weathering of exterior surfaces. Restore reflective surfaces to their original condition.

Remove debris and surface dust from limited access spaces, including roofs, plenums, shafts, trenches, equipment vaults, manholes, attics, and similar spaces.

Sweep concrete floors broom clean in unoccupied spaces.

Clean transparent materials, including mirrors and glass in doors and windows. Remove glazing compounds and other noticeable, vision-obscuring materials. Replace chipped or broken glass and other damaged transparent materials. Polish mirrors and glass, taking care not to scratch surfaces.

Remove labels that are not permanent.

Touch up and otherwise repair and restore marred, exposed finishes and surfaces. Replace finishes and surfaces that cannot be satisfactorily repaired or restored or that already show evidence of repair or restoration.

Do not paint over "UL" and similar labels, including mechanical and electrical nameplates.

Wipe surfaces of mechanical and electrical equipment and similar equipment. Remove excess lubrication, paint and mortar droppings, and other foreign substances.

Replace parts subject to unusual operating conditions.

Clean plumbing fixtures to a sanitary condition, free of stains, including stains resulting from water exposure.

Replace disposable air filters and clean permanent air filters. Clean exposed surfaces of diffusers, registers, and grills.

Clean ducts, blowers, and coils if units were operated without filters during construction.

Clean photovoltaic system as recommended by manufacturer.

Clean light fixtures, lamps, globes, and reflectors to function with full efficiency. Replace burned-out bulbs, and those noticeably dimmed by hours of use, and defective and noisy starters in fluorescent and mercury vapor fixtures to comply with requirements for new fixtures.

Leave Project clean and ready for occupancy.

Comply with safety standards for cleaning. Do not burn waste materials. Do not bury debris or excess materials on Owner's property. Do not discharge volatile, harmful, or dangerous materials into drainage systems. Remove waste materials from Project site and dispose of lawfully.

END OF SECTION 017700

THIS PAGE INTENTIONALLY BLANK

PART 1 - GENERAL

RELATED DOCUMENTS

Drawings and general provisions of the Contract, including General and Supplementary Conditions and other Division 1 Specification Sections, apply to this Section.

SUMMARY

This Section includes administrative and procedural requirements for preparing operation and maintenance manuals, including the following:

Operation and maintenance documentation directory.
Emergency manuals.
Operation manuals for systems, subsystems, and equipment.
Maintenance manuals for the care and maintenance of products, materials, and finishes systems and equipment.

Related Sections include the following:

Division 1 Section "Submittal Procedures" for submitting copies of submittals for operation and maintenance manuals.

Division 1 Section "Closeout Procedures" for submitting operation and maintenance manuals.

Division 1 Section "Project Record Documents" for preparing Record Drawings for operation and maintenance manuals.

Divisions 2 through 33 Sections for specific operation and maintenance manual requirements for the Work in those Sections.

DEFINITIONS

System: An organized collection of parts, equipment, or subsystems united by regular interaction.

Subsystem: A portion of a system with characteristics similar to a system.

SUBMITTALS

Initial Submittal: Submit 1 draft copies of each manual at least 15 days before requesting inspection for Substantial Completion. Include a complete operation and maintenance directory. Architect will return one copy of draft and mark whether general scope and content of manual are acceptable.

Final Submittal: Submit one copy of each manual in final form at least 15 days before final inspection. Architect will return copy with comments within 15 days after final inspection.

Correct or modify each manual to comply with Architect's comments. Submit 3 copies of each corrected manual within 15 days of receipt of Architect's comments.

autotroph
architecture.planning.sustainable design consulting
617 B Paulin St. Santa Fe, NM 87505

PART 2 - PRODUCTS

MANUALS, GENERAL

Organization: Unless otherwise indicated, organize each manual into a separate section for each system and subsystem, and a separate section for each piece of equipment not part of a system. Each manual shall contain the following materials, in the order listed:

Title page.
Table of contents.
Manual contents.

Title Page: Enclose title page in transparent plastic sleeve. Include the following information:

Subject matter included in manual.
Name and address of Project.
Name and address of Owner.
Name, address, and telephone number of Contractor.
Name and address of Architect.
Cross-reference to related systems in other operation and maintenance manuals.

Table of Contents: List each product included in manual, identified by product name, indexed to the content of the volume, and cross-referenced to Specification Section number in Project Manual.

If operation or maintenance documentation requires more than one volume to accommodate data, include comprehensive table of contents for all volumes in each volume of the set.

Manual Contents: Organize into sets of manageable size. Arrange contents alphabetically by system, subsystem, and equipment. If possible, assemble instructions for subsystems, equipment, and components of one system into a single binder.

Binders: Heavy-duty, 3-ring, vinyl-covered, loose-leaf binders, in thickness necessary to accommodate contents, sized to hold 8-1/2-by-11-inch (215-by-280-mm) paper; with clear plastic sleeve on spine to hold label describing contents and with pockets inside covers to hold folded oversize sheets.

If two or more binders are necessary to accommodate data of a system, organize data in each binder into groupings by subsystem and related components. Cross-reference other binders if necessary to provide essential information for proper operation or maintenance of equipment or system.

Identify each binder on front and spine, with printed title "OPERATION AND MAINTENANCE MANUAL," Project title or name, and subject matter of contents. Indicate volume number for multiple-volume sets.

Dividers: Heavy-paper dividers with plastic-covered tabs for each section. Mark each tab to indicate contents. Include typed list of products and major components of equipment included in the section on each divider, cross-referenced to Specification Section number and title of Project Manual.

Protective Plastic Sleeves: Transparent plastic sleeves designed to enclose diagnostic software diskettes for computerized electronic equipment.

Supplementary Text: Prepared on 8-1/2-by-11-inch (215-by-280-mm) white bond paper.

Drawings: Attach reinforced, punched binder tabs on drawings and bind with text.

If oversize drawings are necessary, fold drawings to same size as text pages and use as foldouts.

If drawings are too large to be used as foldouts, fold and place drawings in labeled envelopes and bind envelopes in rear of manual. At appropriate locations in manual, insert typewritten pages indicating drawing titles, descriptions of contents, and drawing locations.

EMERGENCY MANUALS

Content: Organize manual into a separate section for each of the following:

Type of emergency.
Emergency instructions.
Emergency procedures.

Type of Emergency: Where applicable for each type of emergency indicated below, include instructions and procedures for each system, subsystem, piece of equipment, and component:

Fire.
Flood.
Water leak.
Power failure.
Water outage.
System, subsystem, or equipment failure.
Chemical release or spill.

Emergency Instructions: Describe and explain warnings, trouble indications, error messages, and similar codes and signals. Include responsibilities of Owner's operating personnel for notification of Installer, supplier, and manufacturer to maintain warranties.

Emergency Procedures: Include the following, as applicable:

Instructions on stopping.
Shutdown instructions for each type of emergency.
Operating instructions for conditions outside normal operating limits.
Required sequences for electric or electronic systems.
Special operating instructions and procedures.

OPERATION MANUALS

Content: In addition to requirements in this Section, include operation data required in individual Specification Sections and the following information:

System, subsystem, and equipment descriptions.
Performance and design criteria if Contractor is delegated design responsibility.
Operating standards.
Operating procedures.
Operating logs.
Wiring diagrams.
Control diagrams.
Piped system diagrams.
Precautions against improper use.
License requirements including inspection and renewal dates.

Descriptions: Include the following:

Product name and model number.
Manufacturer's name.
Equipment identification with serial number of each component.
Equipment function.
Operating characteristics.
Limiting conditions.
Performance curves.
Engineering data and tests.
Complete nomenclature and number of replacement parts.

Operating Procedures: Include the following, as applicable:

Startup procedures.
Equipment or system break-in procedures.
Routine and normal operating instructions.
Regulation and control procedures.
Instructions on stopping.
Normal shutdown instructions.
Seasonal and weekend operating instructions.
Required sequences for electric or electronic systems.
Special operating instructions and procedures.

Systems and Equipment Controls: Describe the sequence of operation, and diagram controls as installed.

Piped Systems: Diagram piping as installed, and identify color-coding where required for identification.

PRODUCT MAINTENANCE MANUAL

Content: Organize manual into a separate section for each product, material, and finish. Include source information, product information, maintenance procedures, repair materials and sources, and warranties and bonds, as described below.

Source Information: List each product included in manual, identified by product name and arranged to match manual's table of contents. For each product, list name, address, and telephone number of Installer or supplier and maintenance service agent, and cross-reference Specification Section number and title in Project Manual.

Product Information: Include the following, as applicable:

Product name and model number.
Manufacturer's name.
Color, pattern, and texture.
Material and chemical composition.
Reordering information for specially manufactured products.

Maintenance Procedures: Include manufacturer's written recommendations and the following:

Inspection procedures.
Types of cleaning agents to be used and methods of cleaning.
List of cleaning agents and methods of cleaning detrimental to product.
Schedule for routine cleaning and maintenance.
Repair instructions.

Repair Materials and Sources: Include lists of materials and local sources of materials and related services.

Warranties and Bonds: Include copies of warranties and bonds and lists of circumstances and conditions that would affect validity of warranties or bonds.

Include procedures to follow and required notifications for warranty claims.

SYSTEMS AND EQUIPMENT MAINTENANCE MANUAL

Content: For each system, subsystem, and piece of equipment not part of a system, include source information, manufacturers' maintenance documentation, maintenance procedures, maintenance and service schedules, spare parts list and source information, maintenance service contracts, and warranty and bond information, as described below.

Source Information: List each system, subsystem, and piece of equipment included in manual, identified by product name and arranged to match manual's table of contents. For each product, list name, address, and telephone number of Installer or supplier and maintenance service agent, and cross-reference Specification Section number and title in Project Manual.

Manufacturers' Maintenance Documentation: Manufacturers' maintenance documentation including the following information for each component part or piece of equipment:

Standard printed maintenance instructions and bulletins.
Drawings, diagrams, and instructions required for maintenance, including disassembly and component removal, replacement, and assembly.
Identification and nomenclature of parts and components.
List of items recommended to be stocked as spare parts.

Maintenance Procedures: Include the following information and items that detail essential maintenance procedures:

Test and inspection instructions.
Troubleshooting guide.
Precautions against improper maintenance.
Disassembly; component removal, repair, and replacement; and reassembly instructions.
Aligning, adjusting, and checking instructions.
Demonstration and training videotape, if available.

Maintenance and Service Schedules: Include service and lubrication requirements, list of required lubricants for equipment, and separate schedules for preventive and routine maintenance and service with standard time allotment.

Scheduled Maintenance and Service: Tabulate actions for daily, weekly, monthly, quarterly, semiannual, and annual frequencies.

Maintenance and Service Record: Include manufacturers' forms for recording maintenance.

Spare Parts List and Source Information: Include lists of replacement and repair parts, with parts identified and cross-referenced to manufacturers' maintenance documentation and local sources of maintenance materials and related services.

Maintenance Service Contracts: Include copies of maintenance agreements with name and telephone number of service agent.

autotroph
architecture.planning.sustainable design consulting
617 B Paulin St. Santa Fe, NM 87505

Warranties and Bonds: Include copies of warranties and bonds and lists of circumstances and conditions that would affect validity of warranties or bonds.

Include procedures to follow and required notifications for warranty claims.

PART 3 - EXECUTION

MANUAL PREPARATION

Emergency Manual: Assemble a complete set of emergency information indicating procedures for use by emergency personnel and by Owner's operating personnel for types of emergencies indicated.

Product Maintenance Manual: Assemble a complete set of maintenance data indicating care and maintenance of each product, material, and finish incorporated into the Work.

Operation and Maintenance Manuals: Assemble a complete set of operation and maintenance data indicating operation and maintenance of each system, subsystem, and piece of equipment not part of a system.

Engage a factory-authorized service representative to assemble and prepare information for each system, subsystem, and piece of equipment not part of a system.

Prepare a separate manual for each system and subsystem, in the form of an instructional manual for use by Owner's operating personnel.

Manufacturers' Data: Where manuals contain manufacturers' standard printed data, include only sheets pertinent to product or component installed. Mark each sheet to identify each product or component incorporated into the Work. If data include more than one item in a tabular format, identify each item using appropriate references from the Contract Documents. Identify data applicable to the Work and delete references to information not applicable.

Prepare supplementary text if manufacturers' standard printed data are not available and where the information is necessary for proper operation and maintenance of equipment or systems.

Drawings: Prepare drawings supplementing manufacturers' printed data to illustrate the relationship of component parts of equipment and systems and to illustrate control sequence and flow diagrams. Coordinate these drawings with information contained in Record Drawings to ensure correct illustration of completed installation.

Do not use original Project Record Documents as part of operation and maintenance manuals.

Comply with requirements of newly prepared Record Drawings in Division 1 Section "Project Record Documents."

Comply with Division 1 Section "Closeout Procedures" for schedule for submitting operation and maintenance documentation.

END OF SECTION 017823

PART 1 - GENERAL

RELATED DOCUMENTS

Drawings and general provisions of the Contract, including General and Supplementary Conditions and other Division 1 Specification Sections, apply to this Section.

SUMMARY

This Section includes administrative and procedural requirements for Project Record Documents, including the following:

Record Drawings.
Record Specifications.
Record Product Data.

Related Sections include the following:

Division 1 Section "Closeout Procedures" for general closeout procedures.

Division 1 Section "Operation and Maintenance Data" for operation and maintenance manual requirements.

Divisions 2 through 33 Sections for specific requirements for Project Record Documents of the Work in those Sections.

SUBMITTALS

Record Drawings: Comply with the following:

Number of Copies: Submit one set(s) of marked-up Record Prints.

Record Specifications: Submit one copy of Project's Specifications, including addenda and contract modifications.

Record Product Data: Submit one copy of each Product Data submittal.

Where Record Product Data is required as part of operation and maintenance manuals, submit marked-up Product Data as an insert in manual instead of submittal as Record Product Data.

PART 2 - PRODUCTS

RECORD DRAWINGS

Record Prints: Maintain one set of blue- or black-line white prints of the Contract Drawings and Shop Drawings.

Preparation: Mark Record Prints to show the actual installation where installation varies from that shown originally. Require individual or entity who obtained record data, whether individual or entity is Installer, subcontractor, or similar entity, to prepare the marked-up Record Prints.

Give particular attention to information on concealed elements that would be difficult to identify or measure and record later.

autotroph
architecture.planning.sustainable design consulting
617 B Paulin St. Santa Fe, NM 87505

Accurately record information in an understandable drawing technique.

Record data as soon as possible after obtaining it. Record and check the markup before enclosing concealed installations.

Content: Types of items requiring marking include, but are not limited to, the following:

Dimensional changes to Drawings.
Revisions to details shown on Drawings.
Depths of foundations below first floor.
Locations and depths of underground utilities.
Revisions to routing of piping and conduits.
Revisions to electrical circuitry.
Actual equipment locations.
Duct size and routing.
Locations of concealed internal utilities.
Changes made by Change Order or Construction Change Directive.
Changes made following Architect's written orders.
Details not on the original Contract Drawings.
Field records for variable and concealed conditions.
Record information on the Work that is shown only schematically.

Mark the Contract Drawings or Shop Drawings, whichever is most capable of showing actual physical conditions, completely and accurately. If Shop Drawings are marked, show cross-reference on the Contract Drawings.

Mark record sets with erasable, red-colored pencil. Use other colors to distinguish between changes for different categories of the Work at same location.

Mark important additional information that was either shown schematically or omitted from original Drawings.

Note Construction Change Directive numbers, alternate numbers, Change Order numbers, and similar identification, where applicable.

Format: Identify and date each Record Drawing; include the designation "PROJECT RECORD DRAWING" in a prominent location.

Record Prints: Organize Record Prints and newly prepared Record Drawings into manageable sets. Bind each set with durable paper cover sheets. Include identification on cover sheets.

Identification: As follows:

Project name.
Date.
Designation "PROJECT RECORD DRAWINGS."
Name of Architect.
Name of Contractor.

RECORD SPECIFICATIONS

Preparation: Mark Specifications to indicate the actual product installation where installation varies from that indicated in Specifications, addenda, and contract modifications.

Give particular attention to information on concealed products and installations that cannot be readily identified and recorded later.

Mark copy with the proprietary name and model number of products, materials, and equipment furnished, including substitutions and product options selected.

Record the name of manufacturer, supplier, Installer, and other information necessary to provide a record of selections made.

For each principal product, indicate whether Record Product Data has been submitted in operation and maintenance manuals instead of submitted as Record Product Data.

Note related Change Orders, Record Product Data, and Record Drawings where applicable.

RECORD PRODUCT DATA

Preparation: Mark Product Data to indicate the actual product installation where installation varies substantially from that indicated in Product Data submittal.

Give particular attention to information on concealed products and installations that cannot be readily identified and recorded later.

Include significant changes in the product delivered to Project site and changes in manufacturer's written instructions for installation.

Note related Change Orders, Record Specifications, and Record Drawings where applicable.

MISCELLANEOUS RECORD SUBMITTALS

Assemble miscellaneous records required by other Specification Sections for miscellaneous record keeping and submittal in connection with actual performance of the Work. Bind or file miscellaneous records and identify each, ready for continued use and reference.

PART 3 - EXECUTION

RECORDING AND MAINTENANCE

Recording: Maintain one copy of each submittal during the construction period for Project Record Document purposes. Post changes and modifications to Project Record Documents as they occur; do not wait until the end of Project.

Maintenance of Record Documents and Samples: Store Record Documents and Samples in the field office apart from the Contract Documents used for construction. Do not use Project Record Documents for construction purposes. Maintain Record Documents in good order and in a clean, dry, legible condition, protected from deterioration and loss. Provide access to Project Record Documents for Architect's reference during normal working hours.

END OF SECTION 017839

autotroph
architecture.planning.sustainable design consulting
617 B Paulin St. Santa Fe, NM 87505

THIS PAGE INTENTIONALLY BLANK

PART 1 - GENERAL

SUMMARY

This Section includes administrative and procedural requirements for instructing Owner's personnel, including the following:

Demonstration of operation of systems, subsystems, and equipment.

Training in operation and maintenance of systems, subsystems, and equipment.

See Divisions 2 through 33 Sections for specific requirements for demonstration and training for products in those Sections.

SUBMITTALS

Instruction Program: Submit two copies of outline of instructional program for demonstration and training, including a schedule of proposed dates, times, length of instruction time, and instructors' names for each training module. Include learning objective and outline for each training module.

At completion of training, submit one complete training manual(s) for Owner's use.

PART 2 - PRODUCTS

INSTRUCTION PROGRAM

Program Structure: Develop an instruction program that includes individual training modules for each system and equipment not part of a system, as required by individual Specification Sections, and as follows:

Motorized doors, including automatic entrance doors.

Fire-protection systems, including fire alarms.

HVAC systems.

HVAC instrumentation and controls.

Lighting equipment and controls including emergency lighting.

Training Modules: Develop a learning objective and teaching outline for each module. Include a description of specific skills and knowledge that participant is expected to master. For each module, include instruction for the following:

Basis of System Design, Operational Requirements, and Criteria: Include the following:

System, subsystem, and equipment descriptions.
Performance and design criteria if Contractor is delegated design responsibility.
Operating standards.
Regulatory requirements.
Equipment function.
Operating characteristics.
Limiting conditions.
Performance curves.

autotroph
architecture.planning.sustainable design consulting
617 B Paulin St. Santa Fe, NM 87505

Documentation: Review the following items in detail:

Emergency manuals.
Operations manuals.
Maintenance manuals.
Project Record Documents.
Identification systems.
Warranties and bonds.
Maintenance service agreements and similar continuing commitments.

Emergencies: Include the following, as applicable:

Instructions on meaning of warnings, trouble indications, and error messages.
Instructions on stopping.
Shutdown instructions for each type of emergency.
Operating instructions for conditions outside of normal operating limits.
Sequences for electric or electronic systems.
Special operating instructions and procedures.

Operations: Include the following, as applicable:

Startup procedures.
Equipment or system break-in procedures.
Routine and normal operating instructions.
Regulation and control procedures.
Control sequences.
Safety procedures.
Instructions on stopping.
Normal shutdown instructions.
Operating procedures for emergencies.
Operating procedures for system, subsystem, or equipment failure.
Seasonal and weekend operating instructions.
Required sequences for electric or electronic systems.
Special operating instructions and procedures.

Adjustments: Include the following:

Alignments.
Checking adjustments.
Noise and vibration adjustments.
Economy and efficiency adjustments.

Troubleshooting: Include the following:

Diagnostic instructions.
Test and inspection procedures.

Maintenance: Include the following:

Inspection procedures.
Types of cleaning agents to be used and methods of cleaning.
List of cleaning agents and methods of cleaning detrimental to product.
Procedures for routine cleaning
Procedures for preventive maintenance.

autotroph
architecture.planning.sustainable design consulting
617 B Paulin St. Santa Fe, NM 87505

Procedures for routine maintenance.
Instruction on use of special tools.

Repairs: Include the following:

Diagnosis instructions.
Repair instructions.
Disassembly; component removal, repair, and replacement; and reassembly instructions.
Instructions for identifying parts and components.
Review of spare parts needed for operation and maintenance.

PART 3 - EXECUTION

INSTRUCTION

Engage qualified instructors to instruct Owner's personnel to adjust, operate, and maintain systems, subsystems, and equipment not part of a system.

Architect will furnish an instructor to describe basis of system design, operational requirements, criteria, and regulatory requirements.

Owner will furnish an instructor to describe Owner's operational philosophy.

Owner will furnish Contractor with names and positions of participants.

Scheduling: Provide instruction at mutually agreed on times. For equipment that requires seasonal operation, provide similar instruction at start of each season.

Schedule training with Owner with at least seven days' advance notice.

Cleanup: Collect used and leftover educational materials and give to Owner. Remove instructional equipment. Restore systems and equipment to condition existing before initial training use.

END OF SECTION 017900

autotroph
architecture.planning.sustainable design consulting
617 B Paulin St. Santa Fe, NM 87505

THIS PAGE INTENTIONALLY BLANK

PART 1 - GENERAL

RELATED DOCUMENTS

Drawings and general provisions of the Contract, including General and Supplementary Conditions and other Division 1 Specification Sections, apply to this Section.

SUMMARY

This Section includes the following:

Demolition and removal of selected portions of building or structure.
Demolition and removal of selected site elements.
Salvage of existing items to be reused or recycled.

Related Sections include the following:

Division 1 Section "Temporary Facilities and Controls" for temporary construction and environmental-protection measures for selective demolition operations.

Division 1 Section "Cutting and Patching" for cutting and patching procedures.

Division 2 Section "Building Demolition" for demolition of entire buildings, structures, and site improvements.

DEFINITIONS

Remove: Detach items from existing construction and legally recycle or dispose of them off-site, unless indicated to be removed and salvaged or removed and reinstalled.

Remove and Salvage: Detach items from existing construction and deliver them to Owner ready for reuse.

Remove and Reinstall: Detach items from existing construction, prepare them for reuse, and reinstall them where indicated.

Existing to Remain: Existing items of construction that are not to be removed and that are not otherwise indicated to be removed, removed and salvaged, or removed and reinstalled.

QUALITY ASSURANCE

Demolition Firm Qualifications: An experienced firm that has specialized in demolition work similar in material and extent to that indicated for this Project.

Regulatory Requirements: Comply with governing EPA notification regulations before beginning selective demolition. Comply with hauling and disposal regulations of authorities having jurisdiction.

Standards: Comply with ANSI A10.6 and NFPA 241.

PROJECT CONDITIONS

Owner and tenant will occupy buildings immediately adjacent to selective demolition area. Conduct selective demolition so Owner's operations will not be disrupted.

Conditions existing at time of inspection for bidding purpose will be maintained by Owner as far as practical.

Notify Architect of discrepancies between existing conditions and Drawings before proceeding with selective demolition.

Hazardous Materials: Hazardous materials have been identified at the Luisa Street Senior Center. A copy of the hazardous material investigation report is available. It is not expected that hazardous materials will be encountered in the Work at the other sites.

Hazardous materials will be removed by Owner before start of the Work.

If materials suspected of containing hazardous materials are encountered, do not disturb; immediately notify Architect and Owner. Owner will remove hazardous materials under a separate contract.

Storage or sale of removed items or materials on-site is not permitted.

Utility Service: Maintain existing utilities indicated to remain in service and protect them against damage during selective demolition operations.

WARRANTY

Existing Warranties: Remove, replace, patch, and repair materials and surfaces cut or damaged during selective demolition, by methods and with materials so as not to void existing warranties.

PART 2 - PRODUCTS (NOT USED)

PART 3 - EXECUTION

EXAMINATION

Verify that utilities have been disconnected and capped.

Survey existing conditions and correlate with requirements indicated to determine extent of selective demolition required.

When unanticipated mechanical, electrical, or structural elements that conflict with intended function or design are encountered, investigate and measure the nature and extent of conflict. Promptly submit a written report to Architect.

Perform surveys as the Work progresses to detect hazards resulting from selective demolition activities.

UTILITY SERVICES AND MECHANICAL/ELECTRICAL SYSTEMS

Existing Services/Systems: Maintain services/systems indicated to remain and protect them against damage during selective demolition operations.

Cut off pipe or conduit in walls or partitions to be removed. Cap, valve, or plug and seal remaining portion of pipe or conduit after bypassing.

Where entire wall is to be removed, existing services/systems may be removed with removal of the wall.

PREPARATION

Site Access and Temporary Controls: Conduct selective demolition and debris-removal operations to ensure minimum interference with roads, streets, walks, walkways, and other adjacent occupied and used facilities.

Comply with requirements for access and protection specified in Division 1 Section "Temporary Facilities and Controls."

Temporary Facilities: Provide temporary barricades and other protection required to prevent injury to people and damage to adjacent buildings and facilities to remain.

Provide protection to ensure safe passage of people around selective demolition area and to and from occupied portions of building.

Provide temporary weather protection, during interval between selective demolition of existing construction on exterior surfaces and new construction, to prevent water leakage and damage to structure and interior areas.

Protect walls, ceilings, floors, and other existing finish work that are to remain or that are exposed during selective demolition operations.

Cover and protect furniture, furnishings, and equipment that have not been removed.

Comply with requirements for temporary enclosures, dust control, heating, and cooling specified in Division 1 Section "Temporary Facilities and Controls."

Temporary Shoring: Provide and maintain shoring, bracing, and structural supports as required to preserve stability and prevent movement, settlement, or collapse of construction and finishes to remain, and to prevent unexpected or uncontrolled movement or collapse of construction being demolished.

Strengthen or add new supports when required during progress of selective demolition.

Cease operations and notify Architect immediately if safety of structure appears to be endangered.

Do not resume demolition operations until safety is restored.

Existing Items to Remain: Protect construction indicated to remain against damage and soiling during selective demolition. When permitted by Architect, items may be removed to a suitable, protected storage location during selective demolition and cleaned and reinstalled in their original locations after selective demolition operations are complete.

SELECTIVE DEMOLITION, GENERAL

General: Demolish and remove existing construction only to the extent required by new construction and as indicated. Use methods required to complete the Work within limitations of governing regulations and as follows:

Proceed with selective demolition systematically, from higher to lower level. Complete selective demolition operations above each floor or tier before disturbing supporting members on the next lower level.

Neatly cut openings and holes plumb, square, and true to dimensions required. Use cutting methods least likely to damage construction to remain or adjoining construction. Use hand tools or small power tools designed for sawing or grinding, not hammering and chopping, to minimize disturbance of adjacent surfaces. Temporarily cover openings to remain.

Cut or drill from the exposed or finished side into concealed surfaces to avoid marring existing finished surfaces.

Do not use cutting torches.

Remove decayed, vermin-infested, or otherwise dangerous or unsuitable materials and promptly dispose of off-site.

Remove structural framing members and lower to ground by method suitable to avoid free fall and to prevent ground impact or dust generation.

Locate selective demolition equipment and remove debris and materials so as not to impose excessive loads on supporting walls, floors, or framing.

Removed and Recycled Items:

Clean recycled items.
Pack items after cleaning. Identify contents of containers.
Transport items to off-site location as designated by Owner.
Protect items from damage during transport and storage.

Existing Items to Remain: Protect construction indicated to remain against damage and soiling during selective demolition. When permitted by Architect, items may be removed to a suitable, protected storage location during selective demolition and cleaned and reinstalled in their original locations after selective demolition operations are complete.

SELECTIVE DEMOLITION PROCEDURES FOR SPECIFIC MATERIALS

Concrete: Demolish in sections. Cut concrete full depth at junctures with construction to remain and at regular intervals, using power-driven saw, then remove concrete between saw cuts.

Masonry: Demolish in small sections. Cut masonry at junctures with construction to remain, using power-driven saw, then remove masonry between saw cuts.

Concrete Slabs-on-Grade: Saw-cut perimeter of area to be demolished, then break up and remove.

Resilient Floor Coverings: Remove floor coverings and adhesive according to recommendations in RFCI-WP and its Addendum.

Remove residual adhesive and prepare substrate for new floor coverings by one of the methods recommended by RFCI.

Air-Conditioning Equipment: Remove equipment without releasing refrigerants.

DISPOSAL OF DEMOLISHED MATERIALS

General: Except for items or materials indicated to be recycled, reused, salvaged, reinstalled, or otherwise indicated to remain Owner's property, remove demolished materials from Project site and legally dispose of them in an EPA-approved landfill.

Do not allow demolished materials to accumulate on-site.

Remove and transport debris in a manner that will prevent spillage on adjacent surfaces and areas.

Burning: Do not burn demolished materials.

Disposal: Transport demolished materials off Owner's property and legally dispose of them.

CLEANING

Clean adjacent structures and improvements of dust, dirt, and debris caused by selective demolition operations. Return adjacent areas to condition existing before selective demolition operations began.

END OF SECTION 024119

THIS PAGE INTENTIONALLY BLANK

PART 1 - GENERAL

SUMMARY

Section Includes: This Section specifies polished concrete.

Related Sections:

Coordinate with concrete specifications indicated on drawings.

Division 3 section "Polished Concrete Topping".

REFERENCES

American Concrete Institute (ACI):

ACI 302.1R Guide for Concrete Floor and Slab Construction.

ASTM International:

ASTM C309 Standard Specification for Liquid Membrane-Forming Compounds for Curing Concrete.

ASTM C171 Standard Specification for Sheet Materials for Curing Concrete.

ASTM C779 Standard Test Method for Abrasion Resistance of Horizontal Concrete Surfaces.

ASTM D523 Standard Test Method for Specular Gloss

National Floor Safety Institute (NFSI):

NFSI Test Method 101-A Standard for Evaluating High-Traction Flooring Materials, Coatings, and Finishes.

SYSTEM DESCRIPTION

Performance Requirements: Provide polished flooring that has been selected, manufactured and installed to achieve the following:

Abrasion Resistance: ASTM C779, Method A, high resistance, no more than 0.008 inch (0.20 mm) wear in 30 minutes.

Reflectivity: ASTM D523, Specular gloss in accordance with architect's required gloss unit (GU) reading.

High Traction Rating: NFSI 101-A, non-slip properties.

Design Requirements:

Hardened Concrete Properties:

Minimum Concrete Compressive Strength: 4000 psi (24 MPa).
Normal Weight Concrete: No lightweight aggregate.
Non-air entrained.

Placement Properties:

Natural concrete slump of 4 1/2 inches - 5 inches (114 - 127 mm). Admixtures may be used.

autotroph
architecture.planning.sustainable design consulting
617 B Paulin St. Santa Fe, NM 87505

Any admixtures, plasticizers, slag, fly ash or anything taking the place of Portland-based cement shall not exceed 20%. * a straight cement mix is recommended

Flatness Requirements: Overall FF 50, Local FF 35.

Levelness Requirements: Overall FL 30, Local FL 20.

Hard-Steel Troweled (3 passes) Concrete: No burn marks. Finish to ACI 302.1R, Class 5 floor.

When placing edges use a 3′ metal or wooden 2x 4 screed and run parallel with form or edge after initial screed and before floating.

Hand floating shall be parallel to edge and done in 2′ increments to avoid lifting or depressing edges. Do not reach out beyond 2′ of edge with hand tools or float in a fan direction pulling excessive mud to the forms.

Curing Options:

Damp Curing: Seven day cure.

Slab Protection Immediately Following Placement:

Silicone chalks should not be used on the concrete slab. Red and yellow chalks are permanent dyes. Red chalk, black markers, wax pencils should not be used for framing. White and blue chalks are acceptable. Do not over mark for the framing. Do not use silicone sprays to "hold" chalk lines the lines.

Do not use tape, glue, solvents, Pine-Sol, varnish, non-breathing plastics, Liquid Nail, silicone, plastics, nails, plumbers glue, foam insulation, bond release agents, flux, oils, grease, polyurethane, paint, markers, grease sticks, spray paints, crayons, acids, and other chemicals both before and after polishing.

No wood, sheet goods, insulation boards, plywood, press board, drywall, sections of framing and other materials that may damage the concrete finish shall lay on the slab for extended periods of time. They can transfer resins and tannins into the slab which will alter the moisture content in the slab and leave a pattern in the finished floor. Cardboard should be placed between the slab and the stacked material to minimize any unwanted transfers. Also food, beverages, oil, glass, metal, paint, caulk, or primers.

ACTION SUBMITTALS

Shop Drawings: Indicate information on shop drawings as follows:

Typical layout including dimensions and floor grinding schedule.

Plan view of floor and joint pattern layout.

Hardener, sealer, densifier in notes.

Product Data: Submit product data, including manufacturer's spec data product sheet, for specified products.

Deliver to Owner: Material Safety Data Sheets (MSDS).

Preparation and concrete grinding procedures.

INFORMATION SUBMITTALS

Quality Assurance:

Test Reports: Certified test reports showing compliance with specified performance characteristics.

Certificates:

Product certificates signed by manufacturer certifying materials comply with specified performance characteristics and criteria and physical requirements.

Current contractor's certificate signed by manufacturer declaring contractor as an approved installer of sodium silicate polishing system.

Manufacturer's Instructions: Manufacturer's installation instructions.

CLOSEOUT SUBMITTALS

Operation and Maintenance Data: Submit operation and maintenance data for installed products.

Include:

Manufacturer's instructions on maintenance renewal of applied treatments.

Protocols and product specifications for joint filing, crack repair and/or surface repair.

QUALITY ASSURANCE

Qualifications:

Installer experienced in performing work of this section who has specialized in installation of work similar to that required for this project.

Installer trained and holding current certification in system to be applied (if available).

Regulatory Requirements.

NFSI Test Method 101-A: High Traction Material.

Preinstallation Meetings: Conduct a preinstallation meeting to verify project requirements, manufacturer's installation instructions and manufacturer's warranty requirements. Review the following:

Environmental requirements.
Scheduling and phasing of work.
Coordinating with other work and personnel.
Protection of adjacent surfaces.
Surface preparation.
Repair of defects and defective work prior to installation.
Cleaning.
Installation of polished floor finishes.
Application of liquid hardener, densifier.
Protection of finished surfaces after installation.

DELIVERY, STORAGE & HANDLING

Ordering: Comply with manufacturer's ordering instructions and lead time requirements to avoid construction delays.

Delivery: Deliver materials in manufacturer's original packaging with identification labels and seals intact.

Storage and Protection:

Store materials protected from exposure to harmful weather conditions and at temperature conditions recommended by manufacturer.

Protect concrete slab.
Protect from petroleum stains during construction.
Diaper hydraulic power equipment.
Restrict use of pipe cutting machinery.
Restrict placement of reinforcing steel on slab.
Restrict use of acids or acidic detergents on slab.

PROJECT AMBIENT CONDITIONS

Installation Location: Comply with manufacturer's written recommendations.

SEQUENCING

Sequence with other work: Comply with manufacturer's written recommendations for sequencing construction operations.

PART 2 - PRODUCTS

MANUFACTURERS

Ensure that manufacturer has a minimum of 5 years experience in manufacturing components similar to or exceeding the requirements of this project.

POLISHED CONCRETE FINISHING PRODUCTS

Products/Systems:

Hardener, Sealer, Densifier: Water based, odorless liquid, VOC compliant, environmentally safe chemical hardening solution leaving no surface film. Silicate designed specifically to be used in conjunction with concrete polishing. No siliconate hardener will be accepted.

Polyurea Joint Filler: Semi-rigid, 2-component, self-leveling, 100% solids, rapid curing, control joint and crack filler with Shore A 80 or higher hardness.

Oil Repellent Sealer: Penetrating concrete sealer designed specifically to be used in conjunction with polished concrete.

Cleaning Solution: Mild, highly concentrated liquid concrete cleaner and conditioner; biodegradable, and environmentally safe. Cleaner must be pH neutral.

Finish: Semi-gloss, 45 GU @ 60°.

Aggregate Exposure: No aggregate exposed or minimal exposure (1/16"- 1/8" aggregate exposed),

PART 3 - EXECUTION

EXAMINATION

Site Verification of Conditions:

Verify that concrete substrate conditions, which have been previously installed under other sections or contracts, are acceptable for product installation in accordance with manufacturer's instructions prior to installation of concrete finishing materials.

Verify Concrete Slab Performance Requirements:

Verify concrete is cured to 28 day 4000 psi strength.

Verify concrete surfaces received a hard steel-trowel finish (3 passes) during placement.

PREPARATION

Ensure surfaces are clean and free of dirt and other foreign matter harmful to performance of concrete finishing materials.

Examine surface to determine soundness of concrete for polishing.

General Contractor to remove surface contamination.

INSTALLATION

Floor Surface Polishing and Treatment:

Provide polished concrete floor treatment in entirety of slab indicated by finish schedule. Provide consistent finish in all contiguous areas.

Apply floor finish prior to installation of fixtures and accessories.

Diamond polish concrete floor surfaces with planetary grinding machine with a minimum head pressure of 600 lbs (3-4 headed machine). Sequence with coarse to fine grit.

Comply with manufacturer's recommended polishing grits for each sequence to achieve desired finish level. Level of sheen shall match that of approved mock-up.

Expose aggregate in concrete surface as determined by approved mock-up.

All concrete surfaces shall be as uniform in appearance as possible with no visible scratches anywhere in surface.

Grind and polish edges to a maximum of 1/8" of walls to match field area of floor.

Edge into corners with a maximum size of 5" diameter grinding & polishing discs.

Apply silicate densifier/hardener per manufacturer's specifications

Remove defects and re-polish defective areas.

Finish edges of floor finish adjoining other materials in a clean and sharp manner

Concrete Sealer:

No topical sealer allowed.

The appearance of any streaking or swirling from the use of topical sealing products will not be accepted. Identification of such issues will require the surface be ground off and re-polished.

ADJUSTMENTS

Polish to higher gloss those areas not meeting specified gloss levels.

Fill joints flush to surface.

PROTECTION

General contractor to provide adequate protection to prevent any damage to floor.

No wood, sheet goods, insulation boards, plywood, press board, drywall, sections of framing and other materials that may damage the concrete finish shall lay on the slab for extended periods of time. They can transfer resins and tannins into the slab which will alter the moisture content in the slab and leave a pattern in the finished floor. Cardboard should be placed between the slab and the stacked material to minimize any unwanted transfers. Also Food, Beverages, Oil, Glass, Metal, Paint, Caulk, or Primers

Immediately following polishing floor must be covered with vapor barrier and impact protection to protect against any spills, flooding, impact, metal, or any other potentially damaging occurrence. Floor must be kept dry once polishing is complete.

Do not apply tape of any kind to the concrete floor at any time. When covering the floor, overlap sheets. Tape the first sheet to the wall then overlap the second sheet to the first and tape it to the paper. The tape alters the natural curing process and transfers chemicals to and from the slab. Tape, Plastics and other Adhesives can contribute to plasticizer migration that will show in the finished product.

END OF SECTION 033543

PART 1 - GENERAL

RELATED DOCUMENTS

Drawings, general provisions of the Contract, and other related construction documents such as Division 01 specifications apply to this Section

SUMMARY

This section includes products and procedures for the installation of polished concrete topping:

Polished Concrete Topping. Gray
Substrate Preparation Epoxy
Mechanical Diamond Grinding and Polishing Equipment
Concrete Topping Treatment Chemicals

Related Sections:

Division 3 section "Polished Concrete Finishing".

REFERENCES

ASTM C 109M, Compressive Strength Air-Cure Only

ASTM C348, Flexural Strength of Hydraulic-Cement Mortar

ASTM F2170, Relative Humidity in Concrete Floor Slabs Using in situ Probes

ASTM F1869, Moisture Vapor Emission Rate of Concrete Subfloor Using Anhydrous Calcium Chloride

ASTM 710 - Standard Practice for Preparing Concrete Floors to Receive Resilient Flooring

ASTM E430, Standard Test Method for Measurement of Gloss of High-Gloss Surfaces by Abridged Goniophotometry.

SUBMITTALS

Product Data: Submit manufacturer's product data and installation instructions for each material and product used. Deliver manufacturer's Material Safety Data Sheets to Owner.

Qualification Data: Provide written documentation from the manufacturer confirming that installer meets the qualifications as specified and is eligible for manufacturer's warranty.

Maintenance Data: Provide instructions for maintenance of installed work, including methods and frequency recommended for maintaining optimum condition under intended use. These instructions should contain precautions against cleaning products and methods that may be detrimental to finishes and performance.

QUALITY ASSURANCE

Manufacturer Qualifications:

Basis of Design: The ARDEX Polished Concrete System (APCS) consists of a process and products engineered and manufactured by ARDEX Engineered Cements. If this system is use any substitutions are not permitted and void warranty.

Installer Qualifications:

Basis of Design: Product(s) for the ARDEX Polished Concrete System must be installed by an approved installer such as an ARDEX Polished Concrete System Elite Installer or ARDEX LevelMaster Elite Installer™, qualified to provide the warranty as specified.

Installer must be approved in writing by ARDEX and experienced in performing specified work similar in design, products and scope of this project, with a documented track record of successful, in-service performance and with sufficient production capabilities, facilities and personnel to produce specified work.

Warranty: Provide manufacturer's 10-year ARDEX Polished Concrete System Warranty or 10- year LevelMaster Elite Warranty.

DELIVERY, STORAGE AND HANDLING

Deliver all materials in original containers, bearing manufacturer's labels indicating brand name and directions for storage, factory numbered and sealed until ready for installation.

Store all materials in a dry, climate-controlled environment at a minimum of 50°F (10°C) and maximum of 85°F (29°C).

Handle products in accordance with manufacturer's printed recommendations.

SITE CONDITIONS

The topping is a cementitious material. Observe the basic rules of concrete work. Do not install below 50°F (10°C) or above 85°F (29°C) surface temperature. Install quickly if floor is warm (above 70°F/21°C and up to 85°F/29°C) and follow warm weather precautions available from the ARDEX Technical Service Department (888) 512-7339. Never mix with cement or additives other than ARDEX approved products.

Inspect the existing substrate and document unsatisfactory conditions in writing. Verify that surfaces and site conditions are ready to receive work. Correct unacceptable conditions prior to installation of System. Commencement of work constitutes acceptance of substrate conditions.

Close areas to traffic during and after the topping application for a time period recommended by the manufacturer.

PART 2 - PRODUCTS

Available Products: Subject to compliance with requirements, products that may be incorporated into the Work include, but are not limited to, products listed in other Part 2 articles.

Basis-of-Design Product: Subject to compliance with requirements, provide products manufactured by; ARDEX Engineered Cements: 400 ARDEX Park Drive Aliquippa, PA 15001, 1-888-512-7339, www.ardexamericas.com.

POLISHED CONCRETE TOPPING

Portland Cement-based Self-Leveling Topping suitable to receive a mechanical polish concrete process. Acceptable products include:

ARDEX PC-T™ Polished Concrete Topping.

Primer: ARDEX EP 2000™ Substrate Preparation Epoxy.
Water: shall be clean, potable and sufficiently cool (not warmer than 70°F/21°C).

Performance and Physical Properties: Meet or exceed the following values for material cured at 70°F (20°C) and 50% relative humidity:

Flow Time: 10 minutes
Initial Set: Approx. 30 minutes
Final Set: Approx. 90 minutes
Compressive Strength: 6200 psi at 28 days, ASTM C109M.
Flexural Strength: 1000 psi at 28 days, ASTM C78.
VOC: 0 g/l, calculated SCAQMD Rule 1168

Repair materials:

Where spalls, repair or minor patchwork is necessary apply ARDEX CP™ Concrete Patch as necessary and in accordance with recommendations, applied at the appropriate time during the polishing process.

If necessary, correct excessive pinholes with ARDEX PC-M™ Polished Concrete Micro-Topping. Contact the ARDEX Technical Services department for recommendations.

CONCRETE POLISH EQUIPMENT & TOOLING

Equipment and Tooling for use as part of the multi-step dry mechanical process and accessories. Acceptable products include:

Planetary Grinder and Polisher

Features: Large Platform: 32″ planetary floor polisher. Head pressure of 600 lbs.

Tooling

Metal Bonded Diamonds - 60/80 Grit of medium and hard bonded metal.
Transitional Diamonds Ceramic / Flat block resin Bonded - #100 Grit.
Resin Bonded Diamonds - 200, 400, 800, 1500 Grit, as needed.

Micro Polisher – Burnishers

Specific weight and RPM are required to reach temperature of 100°F for application of ARDEX PC FINISH™.

Required Tooling: Diamond Impregnated Pads – 400, 800, 1500, 3000 Grit.

Other equipment and tooling as necessary for small areas and edge work.

All grinding and polishing completed with grinder/polisher equipment should be connected to a dust collector.

CONCRETE TREATMENT CHEMICALS

Concrete treatments designed for use in conjunction with the installation of the ARDEX PC-T and the ARDEX Polished Concrete System. Acceptable products include:

Treatment Chemicals; ARDEX Engineered Cements: 400 ARDEX Park Drive Aliquippa, PA 15001, 1-888-512-7339, www.ardexamericas.com;

Densifier: ARDEX PC 10™ Lithium Hardener for ARDEX PC-T.

Finish Treatment: ARDEX PC FINISH™ Stain and Wear Protection Treatment.

PART 3 - EXECUTION

EXAMINATION

Inspect all concrete substrates and conditions under which the ARDEX Polished Concrete System is to be installed.

Verify that existing concrete has cured a minimum of 28 days before installing ARDEX PC-T and meets the requirement of 3000 psi and 100 pcf.

PREPARATION

All concrete subfloors must be sound, solid, clean, and free of all oil, grease, dirt, curing compounds and any substance that might act as a bond breaker before priming. Mechanically clean if necessary. Acid etching and the use of sweeping compounds and solvents are not acceptable.

Substrates shall be inspected for moisture or any other conditions that could affect the performance of the ARDEX system. Moisture vapor emissions shall not exceed 85% RH, ASTM F 2170. For areas where moisture vapor emissions exceed the specified limits refer to Section 07 26 19, Topical Moisture Vapor Mitigation Systems and install the appropriate ARDEX Moisture Control System.

Joint Preparation: Honor all joints up through the ARDEX PC-T, including expansion joints, isolation joints and control joints (saw cuts).

All non-moving joints shall be filled with ARDEX ARDIFIX™

APPLICATION OF ARDEX PC-T™

Priming: Concrete shall be mechanically prepared to achieve a concrete surface profile (CSP) 3 in accordance with ICRI standards and primed with ARDEX EP 2000™. Follow manufacturers installation instructions, for complete instructions please refer to the Ardex EP 2000 Technical Brochure.

Mix Designs:

Mixing Ratio: The ARDEX PC-T shall be mixed in 2-bag batches. Mix each bag of the powder with the specified amount of water in an ARDEX T-10 Mixing Drum using an ARDEX T-1 Mixing Paddle and a 1/2" heavy-duty drill (12 mm, min. 650 rpm). Mix thoroughly for 2-3 minutes to obtain a lump-free mixture. Follow written instructions on the ARDEX product bag label.

Installation: Install per manufacturer's written instructions.

The minimum installation thickness for the topping shall be 3/8". The necessary thickness will vary with jobsite conditions, and must be adequate to achieve the desired finish.

Allow the topping to cure a minimum of 24 to 72 hours before proceeding with the polishing process. Drying time is a function of jobsite temperature and humidity conditions, as well as the installation thickness.

POLISHING PROCESS.

The Polished Concrete System is an engineered and integrated complete installation system requiring strict adherence to all specified installation processes, equipment, tooling, concrete preparation, joint treatment

and chemicals to achieve the intended result. Any substitutions from the specified products and/or processes without manufacturer approval will void the system warranty. Polish concrete topping per manufacturer's instructions to match specified sheen of adjacent polished concrete floor. Semi-gloss, 45 GU @ 60°.

It is understood that the polished topping slab and adjacent polished structural concrete slab will not match in all respects and that some variation in color and sheen is expected.

Edgework: Where desired, polished edge work of ARDEX PC-T shall be done with a Hand Held or Walk Behind polishing tool. The edge polishing process will match the corresponding steps outlined above for the desired gloss level.

Post Installation: All moving joints and saw cuts shall be filled with ARDEX ARDISEAL™ RAPID PLUS.

PROTECTION

Protect the new polished topping from spills and contamination by petroleum, oil, hydraulic fluid, acid and acidic detergents, paint and other liquid dripping from trades and equipment working over these substrates.

Avoid moisture for 72 hours after installation. Don't permit standing water for this period or place any protective plastic sheeting, rubber matting, rugs or furniture that can prevent proper drying, thereby trapping moisture, which can result in a cloudy effect on the floor.

Light pedestrian use only in the 24 hours after installation. Normal traffic recommended 7 days after completion of the polished topping system installation.

END OF SECTION 033553

THIS PAGE INTENTIONALLY BLANK

PART 1 - GENERAL

RELATED DOCUMENTS

Drawings and general provisions of the Contract, including General and Supplementary Conditions and Division 1 Specification Sections, apply to this Section.

SUMMARY

This Section includes the following:

Non-loadbearing framing with dimension lumber.
Wood blocking and nailers.
Interior wood trim.
Sill seal

DEFINITIONS

Lumber grading agencies, and the abbreviations used to reference them, include the following:

NLGA - National Lumber Grades Authority.
SPIB - Southern Pine Inspection Bureau.
WCLIB - West Coast Lumber Inspection Bureau.
WWPA - Western Wood Products Association.

SUBMITTALS

Product Data: For each type of process and factory-fabricated product. Indicate component materials and dimensions and include construction and application details.

Include data for wood-preservative treatment from chemical treatment manufacturer and certification by treating plant that treated materials comply with requirements. Indicate type of preservative used, net amount of preservative retained, and chemical treatment manufacturer's written instructions for handling, storing, installing, and finishing treated material.

Include copies of warranties from chemical treatment manufacturers for each type of treatment.

Research/Evaluation Reports: For the following, showing compliance with building code in effect for Project:

Preservative-treated wood.

Power-driven fasteners.
Powder-actuated fasteners.
Expansion anchors.
Metal framing anchors.

QUALITY ASSURANCE

Forest Certification: For the following wood products, provide materials produced from wood obtained from forests certified by an FSC-accredited certification body to comply with FSC 1.2, "Principles and Criteria":

Dimension lumber.
Miscellaneous lumber.
Interior wood trim.
Plywood.

DELIVERY, STORAGE, AND HANDLING

Stack lumber, plywood, and other panels; place spacers between each bundle to provide air circulation. Provide for air circulation around stacks and under coverings.

PART 2 - PRODUCTS

WOOD PRODUCTS, GENERAL

Lumber: DOC PS 20 and applicable rules of lumber grading agencies certified by the American Lumber Standards Committee Board of Review.

Factory mark each piece of lumber with grade stamp of grading agency.

For exposed lumber indicated to receive a stained or natural finish, mark grade stamp on end or back of each piece.

Where nominal sizes are indicated, provide actual sizes required by DOC PS 20 for moisture content specified. Where actual sizes are indicated, they are minimum dressed sizes for dry lumber.

Provide dressed lumber, S4S, unless otherwise indicated.

Provide dry lumber with 19 percent maximum moisture content at time of dressing for 2-inch nominal (38-mm actual) thickness or less, unless otherwise indicated.

Wood Structural Panels:

Plywood: Either DOC PS 1 or DOC PS 2, unless otherwise indicated.

Thickness: As needed to comply with requirements specified but not less than thickness indicated.

WOOD-PRESERVATIVE-TREATED MATERIALS

Preservative Treatment by Pressure Process: AWPA C2 (lumber) and AWPA C9 (plywood).

Preservative Chemicals: Acceptable to authorities having jurisdiction containing no arsenic or chromium:

Kiln-dry material after treatment to a maximum moisture content of 19 percent for lumber and 15 percent for plywood. Do not use material that is warped or does not comply with requirements for untreated material.

Mark each treated item with the treatment quality mark of an inspection agency approved by the American Lumber Standards Committee Board of Review.

Application: Treat items indicated on Drawings, and the following:

Wood, nailers, equipment support bases, blocking, stripping, and similar members in connection with roofing, flashing, vapor barriers, and waterproofing.

Wood sills, sleepers, blocking, furring, stripping, and similar concealed members in contact with masonry or concrete.

Wood floor plates that are installed over concrete slabs on grade.

DIMENSION LUMBER

General: Provide dimension lumber of grades indicated according to the American Lumber Standards Committee National Grading Rule provisions of the grading agency indicated.

Non-Load-Bearing Interior Partitions, Blocking, Nailers and Furring: Construction, or No. 2 grade and any of the following species:

Mixed southern pine; SPIB.
Northern species; NLGA.
Western woods; WCLIB or WWPA.

INTERIOR WOOD TRIM

Lumber Trim for Opaque Finish (Painted): Finished lumber (S4S), either finger-jointed or solid lumber, of one of the following species and grades:

Grade 1 Common (Colonial), 2 Common (Sterling) Idaho white, lodgepole, ponderosa, or sugar pine; NLGA or WWPA.

PANEL PRODUCTS

Miscellaneous Concealed Plywood: Exposure 1 sheathing, span rating to suit framing in each location, and thickness as indicated but not less than 1/2 inch (13 mm).

FASTENERS

General: Provide fasteners of size and type indicated that comply with requirements specified in this Article for material and manufacture.

Where carpentry is exposed to weather, in ground contact, in contact with wood preservative treated materials or in area of high relative humidity, provide fasteners of Type 304 stainless steel.

Nails, Wire, Brads, and Staples: FS FF-N-105.

Power-Driven Fasteners: CABO NER-272.

Wood Screws: ASME B18.6.1.

Lag Bolts: ASME B18.2.1. (ASME B18.2.3.8M).

Bolts: Steel bolts complying with ASTM A 307, Grade A (ASTM F 568M, Property Class 4.6); with ASTM A 563 (ASTM A 563M) hex nuts and, where indicated, flat washers.

Expansion Anchors: Anchor bolt and sleeve assembly of material indicated below with capability to sustain, without failure, a load equal to 6 times the load imposed when installed in unit masonry assemblies and equal to 4 times the load imposed when installed in concrete as determined by testing per ASTM E 488 conducted by a qualified independent testing and inspecting agency.

Material – Interior Application: Carbon-steel components, zinc plated to comply with ASTM B 633, Class Fe/Zn 5.

Material – Exterior Application: Stainless steel with bolts and nuts complying with ASTM F 593 and ASTM F 594, Alloy Group 1 or 2 (ASTM F 738M and ASTM F 836M, Grade A1 or A4).

METAL FRAMING ANCHORS

General: Provide galvanized steel framing anchors of structural capacity, type, and size indicated and acceptable to authorities having jurisdiction.

Galvanized Steel Sheet: Hot-dip, zinc-coated steel sheet complying with ASTM A 653/A 653M, G60 (Z180) coating designation.

SILL SEAL

Polyethylene gasketing strip used to reduce air infiltration between concrete foundation and sill plate.

Basis-of-Design Product: Styrofoam Sill Seal

Width: Match wall plate.

PART 3 - EXECUTION

INSTALLATION, GENERAL

Discard units of material with defects that impair quality of carpentry and that are too small to use with minimum number of joints or optimum joint arrangement.

Set carpentry to required levels and lines, with members plumb, true to line, cut, and fitted. Fit carpentry to other construction; scribe and cope as needed for accurate fit. Locate furring, nailers, blocking, and similar supports to comply with requirements for attaching other construction.

Apply field treatment complying with AWPA M4 to cut surfaces of preservative-treated lumber and plywood.

Securely attach carpentry work as indicated and according to applicable codes and recognized standards.

Countersink fastener heads on exposed carpentry work and fill holes with wood filler.

Use fasteners of appropriate type and length. Predrill members when necessary to avoid splitting wood.

WOOD BLOCKING, AND NAILER INSTALLATION

Install where indicated and where required for attaching other work. Form to shapes indicated and cut as required for true line and level of attached work. Coordinate locations with other work involved.

Attach items to substrates to support applied loading. Recess bolts and nuts flush with surfaces, unless otherwise indicated.

WOOD FURRING INSTALLATION

Install level and plumb with closure strips at edges and openings. Shim with wood as required for tolerance of finish work.

Fire block furred spaces of walls, at each floor level and at ceiling, with wood blocking or noncombustible materials accurately fitted to close furred spaces.

Furring to Receive Gypsum Board: Install furring vertically at 16 inches (406 mm) o.c.

WOOD TRIM INSTALLATION

Install with minimum number of joints practical, using full-length pieces from maximum lengths of lumber available. Do not use pieces less than 24 inches (610 mm) long except where necessary. Stagger joints in adjacent and related standing and running trim. Cope at returns and miter at corners to produce tight-fitting joints with full-surface contact throughout length of joint. Use scarf joints for end-to-end joints.

Install trim after gypsum board joint-finishing operations are completed.

Fasten to prevent movement or warping. Countersink fastener heads and fill holes.

Ease exposed edges.

Install to tolerance of 1/8 inch in 96 inches (3 mm in 2438 mm) for level and plumb. Install adjoining finish carpentry with 1/32-inch (0.8-mm) maximum offset for flush installation and 1/16-inch (1.6-mm) maximum offset for reveal installation.

END OF SECTION 061053

THIS PAGE INTENTIONALLY BLANK

PART 1 - GENERAL

RELATED DOCUMENTS

Drawings and general provisions of the Contract, including General and Supplementary Conditions and Division 1 Specification Sections, apply to this Section.

SUMMARY

This Section includes the following:

Perimeter insulation under slabs-on-grade.
Perimeter wall insulation (supporting backfill).
Concealed building insulation.
Self-supported, spray-applied polyurethane foam insulation.

Related Sections include the following:

Division 9 Section "Gypsum Board" for sound attenuation blanket.

REFERENCES

ASTM International (ASTM):

ASTM C518-[04]: Test Method for Steady-State Heat Flux Measurements and Thermal Transmission Properties by Means of the Heat Flow Meter Apparatus.

ASTM D1621-[04a]: Test Method for Compressive Properties of Rigid Cellular Plastics.

ASTM D1622-[03]: Test Method for Apparent Density of Rigid Cellular

ASTM D2126-[99]: Test Method for Response of Rigid Cellular Plastics to Thermal and Humid Aging.

ASTM E84-[05]: Test Method for Surface Burning Characteristics of Building Materials.

ASTM E96/E96M-[05]: Test Method for Water Vapor Transmission of Materials.

ASTM E 2357-[05]: Test Method for Determining Air Leakage of Air Barrier Assemblies.

ASTM D6226: Standard Method for Open Cell Content of Rigid Cellular Plastics.

Underwriters Laboratories Inc. (UL):

UL 723: Surface Burning Characteristics of Building Materials.

National Fire Protection Association (NFPA):

NFPA 285 [2006]: Standard Method of Test for the Evaluation of Flammability Characteristics of Exterior Non-Load-Bearing Wall Assemblies Containing Combustible Components Using the Intermediate-Scale, Multistory Test Apparatus

NFPA 286 [2006]: Standard Methods of Fire Tests for Evaluating Room Fire Growth Contribution

DEFINITIONS

Mineral-Fiber Insulation: Insulation composed of rock-wool fibers, slag-wool fibers, or glass fibers; produced in boards and blanket with latter formed into batts (flat-cut lengths) or rolls.

SUBMITTALS

Product Data: For each type of product indicated.

Manufacturer's application or installation instructions.

QUALITY ASSURANCE

Source Limitations: Obtain each type of building insulation through one source from a single manufacturer.

Fire-Test-Response Characteristics: Provide insulation and related materials with the fire-test-response characteristics indicated, as determined by testing identical products per test method indicated below by UL or another testing and inspecting agency acceptable to authorities having jurisdiction. Identify materials with appropriate markings of applicable testing and inspecting agency.

Surface-Burning Characteristics: ASTM E 84.

Fire-Resistance Ratings: ASTM E 119.

Combustion Characteristics: ASTM E 136.

Spray Polyurethane Foam Installation: Spray polyurethane foam installer shall be certified by spray foam manufacturer.

DELIVERY, STORAGE, AND HANDLING

Protect insulation materials from physical damage and from deterioration by moisture, soiling, and other sources. Store inside and in a dry location. Comply with manufacturer's written instructions for handling, storing, and protecting during installation.

Protect plastic insulation as follows:

Do not expose to sunlight, except to extent necessary for period of installation and concealment.

Protect against ignition at all times. Do not deliver plastic insulating materials to Project site before installation time.

Complete installation and concealment of plastic materials as rapidly as possible in each area of construction.

PROJECT CONDITIONS

Spray foam insulation application

Ventilate area to receive insulation by introducing fresh air and exhausting air continuously during any 24 hours after application to maintain non-toxic, unpolluted, safe working conditions.

Protect workers as recommended by insulation manufacturer.

Protect adjacent surfaces and equipment from damage by overspray, fall-out, and dusting of insulation materials.

Dispose of waste foam daily in location designated by consultant and decontaminate empty drums in accordance with foam manufacturer's instructions.

Prepare all surfaces in accordance to manufacturer’s recommendations.

PART 2 - PRODUCTS

MANUFACTURERS

In other Part 2 articles where titles below introduce lists, the following requirements apply to product selection:

Available Products: Subject to compliance with requirements, products that may be incorporated into the Work include, but are not limited to, products specified.

Available Manufacturers: Subject to compliance with requirements, manufacturers offering products that may be incorporated into the Work include, but are not limited to, manufacturers specified.

FOAM-PLASTIC BOARD INSULATION

Extruded-Polystyrene Board Insulation (XPS): ASTM C 578, of type and density indicated below, with maximum flame-spread and smoke-developed indexes of 75 and 450, respectively:

Available Manufacturers:

Dow Chemical Company.
Owens Corning.

Type IV, 1.60 lb/cu. ft. (26 kg/cu. m), unless otherwise indicated.

GLASS-FIBER BLANKET INSULATION

Available Manufacturers:

CertainTeed Corporation.
Guardian Fiberglass, Inc.
Johns Manville.
Knauf Fiber Glass.
Owens Corning.

Kraft Faced, Glass-Fiber Blanket Insulation: ASTM C 665, Type II, Class C, Category 1 ASTM E 96 Permeability: 1.0 Perm. Formaldehyde free.

Where glass-fiber blanket insulation is indicated by the following thicknesses, provide blankets in batt or roll form with thermal resistances indicated:

5-1/2 inches (140 mm) thick with a thermal resistance of 21 deg F x h x sq. ft./Btu at 75 deg F (3.7 K x sq. m/W at 24 deg C).

SPRAY-APPLIED POLYURETHANE FOAM INSULATION

Available Manufacturers:

Dow Chemical

Spray Polyurethane Foam: Two-component spray polyurethane cellular plastic foam, complying with the following methods and meeting the following physical properties:

Core Density (ASTM D1622): [Minimum 2pcf
Thermal Resistance (ASTM C518): 140degreeF/90day Aged R-Value, measured at 75F mean Temp: Minimum R6.0/inch.

Flame Spread (ASTM E84, Class A): 25 or less.
Smoke Developed (ASTM E84, Class A): 450 or less.
Compressive Strength minimum (ASTM D1621, 10% parallel to rise): (20 psi)(182 kPa).
Closed Cell Content (ASTM D2856): minimum 95 percent.
Water Absorption by Volume maximum. (ASTM D2842): 2.5 percent.
Water Vapor Permeability maximum. (ASTM E96): [2.5 perm-inches] [3.6 ng/(Pa.s.m)].

Available Products:

STYROFOAM™ Spray Polyurethane Foam Insulation (MX Series).

Primers: Follow manufacturer's recommendations for surfaces conditions.

For oily steel surface like Z-bar, roof deck, curtain wall pan, aluminum tube or PVC pipes cleaning, etching or a primer may be needed before spraying polyurethane foam.

Application equipment shall be maintained and in good operating conditions and approved by the foam manufacturer for type of application.

PART 3 - EXECUTION

EXAMINATION

Examine substrates and conditions, with Installer present, for compliance with requirements of Sections in which substrates and related work are specified and for other conditions affecting performance.

Proceed with installation only after unsatisfactory conditions have been corrected.

PREPARATION

Clean substrates of substances harmful to insulation or vapor retarders, including removing projections capable of puncturing vapor retarders or of interfering with insulation attachment.

INSTALLATION, GENERAL

Comply with insulation manufacturer's written instructions applicable to products and application indicated.

Install insulation that is undamaged, dry, and unsoiled and that has not been left exposed at any time to ice, rain, and snow.

Extend insulation in thickness indicated to envelop entire area to be insulated. Cut and fit tightly around obstructions and fill voids with insulation. Remove projections that interfere with placement.

Water-Piping Coordination: If water piping is located within insulated exterior walls, coordinate location of piping to ensure that it is placed on warm side of insulation and insulation encapsulates piping.

For preformed insulating units, provide sizes to fit applications indicated and selected from manufacturer's standard thicknesses, widths, and lengths. Apply single layer of insulation units to produce thickness indicated unless multiple layers are otherwise shown or required to make up total thickness.

INSTALLATION OF PERIMETER AND UNDER-SLAB INSULATION

On vertical surfaces, set insulation units in adhesive applied according to manufacturer's written instructions. Use adhesive recommended by insulation manufacturer.

If not otherwise indicated, extend insulation a minimum of 24 inches (610 mm) below exterior grade line.

On horizontal surfaces, loosely lay insulation units according to manufacturer's written instructions. Stagger end joints and tightly abut insulation units.

INSTALLATION OF GENERAL BUILDING INSULATION

Apply insulation units to substrates by method indicated, complying with manufacturer's written instructions. If no specific method is indicated, bond units to substrate with adhesive or use mechanical anchorage to provide permanent placement and support of units.

Install mineral-fiber insulation in cavities formed by framing members according to the following requirements:

Use insulation widths and lengths that fill the cavities formed by framing members. If more than one length is required to fill cavity, provide lengths that will produce a snug fit between ends.

Place insulation in cavities formed by framing members to produce a friction fit between edges of insulation and adjoining framing members.

For wood-framed construction, install mineral-fiber blankets according to ASTM C 1320 and as follows:

With faced blankets having stapling flanges, lap blanket flange over flange of adjacent blanket to maintain continuity of vapor retarder once finish material is installed over it.

Apply self-supported, spray-applied cellulosic insulation according to manufacturer's written instructions. Do not apply insulation until installation of pipes, ducts, conduits, wiring, and electrical outlets in walls is completed and windows, electrical boxes, and other items not indicated to receive insulation are masked. After insulation is applied, make it flush with face of studs by using method recommended by insulation manufacturer.

Stuff unfaced glass-fiber insulation around window shim spaces and into miscellaneous voids and cavity spaces where shown. Compact to approximately 40 percent of normal maximum volume equaling a density of approximately 2.5 lb/cu. ft. (40 kg/cu. m).

PROTECTION

Protect installed insulation from damage due to harmful weather exposures, physical abuse, and other causes. Provide temporary coverings or enclosures where insulation is subject to abuse and cannot be concealed and protected by permanent construction immediately after installation.

Any open flame or welding shall not be in contact with the Spray Polyurethane Foam.

All plastic insulation must be protected from interior occupancy space by an approved thermal barrier to meet the requirements of local Building Codes.

END OF SECTION 072100

THIS PAGE INTENTIONALLY BLANK

PART 1 - GENERAL

RELATED DOCUMENTS

Drawings and general provisions of the Contract, including General and Supplementary Conditions and Division 1 Specification Sections, apply to this Section.

SUMMARY

This Section includes the following:

Adhered membrane roofing system.

Related Sections include the following:

Division 6 Section "Miscellaneous Carpentry" for wood nailers, and blocking.

DEFINITIONS

Roofing Terminology: Refer to ASTM D 1079 and glossary of NRCA's "The NRCA Roofing and Waterproofing Manual" for definition of terms related to roofing work in this Section.

Design Uplift Pressure: The uplift pressure, calculated according to procedures in SPRI's "Wind Load Design Guide for Fully Adhered and Mechanically Fastened Roofing Systems," before multiplication by a safety factor.

PERFORMANCE REQUIREMENTS

General: Provide installed roofing membrane and base flashings that remain watertight; do not permit the passage of water; and resist specified uplift pressures, thermally induced movement, and exposure to weather without failure.

Material Compatibility: Provide roofing materials that are compatible with one another under conditions of service and application required, as demonstrated by roofing membrane manufacturer based on testing and field experience.

Roofing System Design: Provide a membrane roofing system that is identical to systems that have been successfully tested by a qualified testing and inspecting agency to resist uplift pressure calculated according to ASCE 7 as indicated on drawings.

SUBMITTALS

Product Data: For each type of product indicated.

Samples for Verification: For the following products:

12-by-12-inch (300-by-300-mm) square of sheet roofing, of color specified, including T-shaped side and end lap seam.

Installer Certificates: Signed by roofing system manufacturer certifying that Installer is approved, authorized, or licensed by manufacturer to install roofing system.

Product Test Reports: Based on evaluation of comprehensive tests performed by manufacturer and witnessed by a qualified testing agency, for components of roofing system.

Maintenance Data: For roofing system to include in maintenance manuals.

Warranties: Special warranties specified in this Section.

Inspection Report: Copy of roofing system manufacturer's inspection report of completed roofing installation.

QUALITY ASSURANCE

Source Limitations: Obtain components for membrane roofing system from or approved by roofing membrane manufacturer.

DELIVERY, STORAGE, AND HANDLING

Deliver roofing materials to Project site in original containers with seals unbroken and labeled with manufacturer's name, product brand name and type, date of manufacture, and directions for storing and mixing with other components.

Store liquid materials in their original undamaged containers in a clean, dry, protected location and within the temperature range required by roofing system manufacturer. Protect stored liquid material from direct sunlight.

Discard and legally dispose of liquid material that cannot be applied within its stated shelf life.

Protect roof insulation materials from physical damage and from deterioration by sunlight, moisture, soiling, and other sources. Store in a dry location. Comply with insulation manufacturer's written instructions for handling, storing, and protecting during installation.

Handle and store roofing materials and place equipment in a manner to avoid permanent deflection of deck.

PROJECT CONDITIONS

Weather Limitations: Proceed with installation only when existing and forecasted weather conditions permit roofing system to be installed according to manufacturer's written instructions and warranty requirements.

WARRANTY

Special Warranty: Manufacturer's standard form, without monetary limitation, in which manufacturer agrees to repair or replace components of membrane roofing system that fail in materials or workmanship within specified warranty period. Failure includes roof leaks.

Special warranty includes roofing membrane and base flashings,.

Warranty Period: 10 years from date of Substantial Completion.

Special Project Warranty: Submit roofing Installer's warranty, on warranty form at end of this Section, signed by Installer, covering Work of this Section, including all components of membrane roofing system such as roofing membrane, base flashing, roof insulation, fasteners, cover boards, substrate boards, vapor retarders, roof pavers, and walkway products, for the following warranty period:

Warranty Period: Two years from date of Substantial Completion.

PART 2 - PRODUCTS

MANUFACTURERS

Available Products: Subject to compliance with requirements, products that may be incorporated into the Work include, but are not limited to, the products specified.

THERMOPLASTIC POLYOLEFIN ROOFING MEMBRANE

Fabric-Reinforced Thermoplastic Polyolefin Sheet: Uniform, flexible sheet formed from a thermoplastic polyolefin, internally fabric or scrim reinforced, and as follows:

Manufacturers:

Carlisle SynTec Incorporated.
Firestone Building Products Company.
GAF Materials Corporation.
GenFlex Roofing Systems.
Johns Manville International, Inc.

Thickness: 60 mils, nominal.

Exposed Face Color: White.

Physical Properties:

Breaking Strength: 225 lbf (1 kN); ASTM D 751, grab method.
Elongation at Break: 15 percent; ASTM D 751.
Tearing Strength: 55 lbf (245 N) minimum; ASTM D 751, Procedure B.
Brittleness Point: Minus 22 deg F (30 deg C).
Ozone Resistance: No cracks after sample, wrapped around a 3-inch- (75-mm-) diameter mandrel, is exposed for 166 hours to a temperature of 104 deg F (40 deg C) and an ozone level of 100 pphm (100 mPa); ASTM D 1149.
Resistance to Heat Aging: 90 percent minimum retention of breaking strength, elongation at break, and tearing strength after 166 hours at 240 deg F (116 deg C); ASTM D 573.
Water Absorption: Less than 4 percent mass change after 166 hours' immersion at 158 deg F (70 deg C); ASTM D 471.
Linear Dimension Change: Plus or minus 2 percent; ASTM D 1204.

AUXILIARY MATERIALS

General: Auxiliary materials recommended by roofing system manufacturer for intended use and compatible with membrane roofing.

Liquid-type auxiliary materials shall meet VOC limits of authorities having jurisdiction.

Sheet Flashing: Manufacturer's standard unreinforced thermoplastic polyolefin sheet flashing, 55 mils thick, minimum, of same color as sheet membrane.

Bonding Adhesive: Manufacturer's standard bonding adhesive for membrane, and solvent-based bonding adhesive for base flashings.

Slip Sheet: Manufacturer's recommended slip sheet, of type required for application.

Metal Termination Bars: Manufacturer's standard predrilled stainless-steel or aluminum bars, approximately 1 by 1/8 inch (25 by 3 mm) thick; with anchors.

Metal Battens: Manufacturer's standard aluminum-zinc-alloy-coated or zinc-coated steel sheet, approximately 1 inch (25 mm) wide by 0.05 inch (1.3 mm) thick, prepunched.

Fasteners: Factory-coated steel fasteners and metal or plastic plates meeting corrosion-resistance provisions in FMG 4470, designed for fastening membrane to substrate, and acceptable to membrane roofing system manufacturer.

Counterflashing: Fabricate from the following material:

Aluminum: 0.0320 inch (0.8 mm) thick.

Flashing Receivers: Fabricate from the following material:

Aluminum: 0.0320 inch (0.8 mm) thick.

High-Performance Organic Coating Finish: AA-C12C42R1x (Chemical Finish: cleaned with inhibited chemicals; Chemical Finish: acid chromate-fluoride-phosphate conversion coating; Organic Coating: as specified below). Prepare, pretreat, and apply coating to exposed metal surfaces to comply with coating and resin manufacturer's instructions.

Fluoropolymer 2-Coat Coating System: Manufacturer's standard 2-coat, thermocured system composed of specially formulated inhibitive primer and fluoropolymer color topcoat containing not less than 70 percent polyvinylidene fluoride resin by weight; complying with AAMA 605.2.

Color: As selected from manufacturer’s complete range of colors.

Miscellaneous Accessories: Provide pourable sealers, preformed cone and vent sheet flashings, preformed inside and outside corner sheet flashings, T-joint covers, termination reglets, cover strips, and other accessories.

PART 3 - EXECUTION

EXAMINATION

Examine substrates, areas, and conditions, with Installer present, for compliance with the following requirements and other conditions affecting performance of roofing system:

Proceed with installation only after unsatisfactory conditions have been corrected.

PREPARATION

Clean substrate of dust, debris, moisture, and other substances detrimental to roofing installation according to roofing system manufacturer's written instructions. Remove sharp projections.

ADHERED ROOFING MEMBRANE INSTALLATION

Install roofing membrane over area to receive roofing according to membrane roofing system manufacturer's written instructions. Unroll roofing membrane and allow to relax before installing.

Install sheet according to ASTM D 5036.

Start installation of roofing membrane in presence of membrane roofing system manufacturer's technical personnel.

Accurately align roofing membrane and maintain uniform side and end laps of minimum dimensions required by manufacturer. Stagger end laps.

Bonding Adhesive: Apply to substrate and underside of roofing membrane at rate required by manufacturer and allow to partially dry before installing roofing membrane. Do not apply bonding adhesive to splice area of roofing membrane.

Adhesively fasten roofing membrane securely at terminations, penetrations, and perimeter of roofing.

Apply roofing membrane with side laps shingled with slope of roof deck where possible.

Seams: Clean seam areas, overlap roofing membrane, and hot-air weld side and end laps of roofing membrane according to manufacturer's written instructions to ensure a watertight seam installation.

Verify field strength of seams a minimum of twice daily and repair seam sample areas.

Repair tears, voids, and lapped seams in roofing membrane that does not meet requirements.

Adhesive Seam Installation: Clean both faces of splice areas, apply splicing cement, and firmly roll side and end laps of overlapping membrane roofing according to manufacturer’s written instructions to ensure watertight seam installation. Apply lap sealant and seal exposed edges of membrane roofing terminations.

Tape Seam Installation: Clean and prime both faces splice areas, apply splice tape, and firmly roll side and end laps of overlapping membrane roofing according to manufacturer’s written instructions to ensure watertight seam installation. Apply lap sealant and seal exposed edges of membrane roofing terminations.

Spread sealant or mastic bed over deck drain flange at deck drains and securely seal roofing membrane in place with clamping ring.

Install flashings and accessories in strict compliance with roofing manufacture’s printed details and instructions.

PROTECTING AND CLEANING

Protect membrane roofing system from damage and wear during remainder of construction period. When remaining construction will not affect or endanger roofing, inspect roofing for deterioration and damage, describing its nature and extent in a written report, with copies to Architect and Owner.

Correct deficiencies in or remove membrane roofing system that does not comply with requirements, repair substrates, and repair or reinstall membrane roofing system to a condition free of damage and deterioration at time of Substantial Completion and according to warranty requirements.

Clean overspray and spillage from adjacent construction using cleaning agents and procedures recommended by manufacturer of affected construction.

END OF SECTION 075400

THIS PAGE INTENTIONALLY BLANK

PART 1 - GENERAL

RELATED DOCUMENTS

Drawings and general provisions of the Contract, including General and Supplementary Conditions and Division 1 Specification Sections, apply to this Section.

SUMMARY

This Section includes sheet metal flashing and trim in the following categories:

Roof drainage systems

Metal flashing.

Related Sections: The following Sections contain requirements that relate to this Section:

Division 7 Section "Joint Sealants" for elastomeric sealants.

Division 7 Roofing Sections for flashing and roofing accessories installed integral with roofing membrane as part of roofing-system work.

PERFORMANCE REQUIREMENTS

General: Install sheet metal flashing and trim to withstand wind loads, structural movement, thermally induced movement, and exposure to weather without failing.

SUBMITTALS

General: Submit each item in this Article according to the Conditions of the Contract and Division 1 Specification Sections.

Product Data including manufacturer's material and finish data, installation instructions, and general recommendations for each specified flashing material and fabricated product.

Shop Drawings for exposed flashing showing layout, profiles, methods of joining, and anchorage details.

Samples of sheet metal flashing, trim, and accessory items, in the specified finish.

8-inch- (200-mm-) square Samples of specified sheet materials to be exposed as finished surfaces.

QUALITY ASSURANCE

Installer Qualifications: Engage an experience Installer who has completed sheet metal flashing and trim work similar in material, design, and extent to that indicated for this Project and with a record of successful in-service performance.

PROJECT CONDITIONS

Coordinate Work of this Section with interfacing and adjoining Work for proper sequencing of each installation. Ensure best possible weather resistance, durability of Work, and protection of materials and finishes.

PART 2 - PRODUCTS

METALS

Aluminum: Alloy and temper recommended by aluminum producer and finisher for type of use and finish indicated and with not less than the strength and durability of alloy and temper designated below:

Mill-Finish Aluminum Sheet: ASTM B 209 (ASTM B 209M), 3003-H14, with a minimum thickness of 0.040 inch (1.0 mm), unless otherwise indicated.

MISCELLANEOUS MATERIALS AND ACCESSORIES

Fasteners: Same metal as sheet metal flashing or other noncorrosive metal as recommended by sheet metal manufacturer. Match finish of exposed heads with material being fastened.

Asphalt Mastic: SSPC-Paint 12, solvent-type asphalt mastic, nominally free of sulfur and containing no asbestos fibers, compounded for 15-mil (0.4-mm) dry film thickness per coat.

Mastic Sealant: Polyisobutylene; nonhardening, nonskinning, nondrying, nonmigrating sealant.

Elastomeric Sealant: Generic type recommended by sheet metal manufacturer and fabricator of components being sealed and complying with requirements for joint sealants as specified in Division 7 Section "Joint Sealants."

Epoxy Seam Sealer: 2-part, noncorrosive, aluminum seam-cementing compound, recommended by aluminum manufacturer for exterior and interior nonmoving joints, including riveted joints.

Adhesives: Type recommended by flashing sheet metal manufacturer for waterproof and weather-resistant seaming and adhesive application of flashing sheet metal.

Paper Slip Sheet: 5-lb/square (0.244 kg/sq. m) red rosin, sized building paper conforming to FS UU-B-790, Type I, Style 1b.

Polyethylene Underlayment: ASTM D 4397, minimum 6-mil- (0.15-mm-) thick black polyethylene film, resistant to decay when tested according to ASTM E 154.

Metal Accessories: Provide sheet metal clips, straps, anchoring devices, and similar accessory units as required for installation of Work, matching or compatible with material being installed; noncorrosive; size and thickness required for performance.

FABRICATION, GENERAL

Sheet Metal Fabrication Standard: Fabricate sheet metal flashing and trim to comply with recommendations of SMACNA's "Architectural Sheet Metal Manual" that apply to the design, dimensions, metal, and other characteristics of the item indicated.

Comply with details shown to fabricate sheet metal flashing and trim that fit substrates and result in waterproof and weather-resistant performance once installed. Verify shapes and dimensions of surfaces to be covered before fabricating sheet metal.

Form exposed sheet metal Work that is without excessive oil canning, buckling, and tool marks and that is true to line and levels indicated, with exposed edges folded back to form hems.

Seams: Fabricate nonmoving seams in aluminum with flat-lock seams. Form seams and seal with epoxy seam sealer.

Expansion Provisions: Space movement joints at maximum of 10 feet (3 m) with no joints allowed within 24 inches (610 mm) of corner or intersection. Where lapped or bayonet-type expansion provisions in Work cannot be used or would not be sufficiently weatherproof and waterproof, form expansion joints of intermeshing hooked flanges, not less than 1 inch (25 mm) deep, filled with mastic sealant (concealed within joints).

Sealed Joints: Form nonexpansion, but movable, joints in metal to accommodate elastomeric sealant to comply with SMACNA standards.

Separate metal from noncompatible metal or corrosive substrates by coating concealed surfaces at locations of contact with asphalt mastic or other permanent separation as recommended by manufacturer.

Conceal fasteners and expansion provisions where possible. Exposed fasteners are not allowed on faces of sheet metal exposed to public view.

Fabricate cleats and attachment devices from same material as sheet metal component being anchored or from compatible, noncorrosive metal recommended by sheet metal manufacturer.

Size: As recommended by SMACNA manual or sheet metal manufacturer for application but never less than thickness of metal being secured.

ALUMINUM FINISHES

General: Comply with Aluminum Association's (AA) "Designation System for Aluminum Finishes" for finish designations and application recommendations.

High-Performance Organic Coating Finish: AA-C12C42R1x (Chemical Finish: cleaned with inhibited chemicals; Chemical Finish: acid chromate-fluoride-phosphate conversion coating; Organic Coating: as specified below). Prepare, pretreat, and apply coating to exposed metal surfaces to comply with coating and resin manufacturer's instructions.

Fluoropolymer 2-Coat Coating System: Manufacturer's standard 2-coat, thermocured system composed of specially formulated inhibitive primer and fluoropolymer color topcoat containing not less than 70 percent polyvinylidene fluoride resin by weight; complying with AAMA 605.2.

Color: To be selected from manufacturer’s standard colors.

SHEET METAL FABRICATIONS

General: Fabricate sheet metal items in thickness or weight needed to comply with performance requirements but not less than that listed below for each application and metal.

Exposed Flashings: Fabricate from the following material:

Aluminum: 0.032 inch thick.

Finish: High-Performance Organic Coating

Color: As selected from manufacturer’s complete range of colors.

Concealed Flashing: Fabricate from the following material:

Aluminum: 0.024 inch thick.

Finish: Mill finish

Downspouts: Manufacturers standard, rectangular corrugated, with matching style "A" elbows as indicated. Manufactured from the following exposed metal.

Formed Aluminum: 0.024 thick.

Size: Confirm 3x4 size to match existing.

Color: Bronze to match existing

Precast Concrete Splashblocks: Nominal 12" x 30" fiber-mesh reinforced concrete splashblock shaped to divert water away from foundation. Buff, beige or tan color as selected from manufacturer's standard colors.

PART 3 - EXECUTION

EXAMINATION

Examine substrates and conditions under which sheet metal flashing and trim are to be installed and verify that Work may properly commence. Do not proceed with installation until unsatisfactory conditions have been corrected.

INSTALLATION

General: Unless otherwise indicated, install sheet metal flashing and trim to comply with performance requirements, manufacturer's installation instructions, and SMACNA's "Architectural Sheet Metal Manual." Anchor units of Work securely in place by methods indicated, providing for thermal expansion of metal units; conceal fasteners where possible, and set units true to line and level as indicated. Install Work with laps, joints, and seams that will be permanently watertight and weatherproof.

Install exposed sheet metal Work that is without oil canning, buckling, and tool marks and that is true to line and levels indicated, with exposed edges folded back to form hems. Install sheet metal flashing and trim to fit substrates and to result in waterproof and weather-resistant performance. Verify shapes and dimensions of surfaces to be covered before fabricating sheet metal.

Expansion Provisions: Provide for thermal expansion of exposed sheet metal Work. Space movement joints at maximum of 10 feet (3 m) with no joints allowed within 24 inches (610 mm) of corner or intersection. Where lapped or bayonet-type expansion provisions in Work cannot be used or would not be sufficiently weatherproof and waterproof, form expansion joints of intermeshing hooked flanges, not less than 1 inch (25 mm) deep, filled with mastic sealant (concealed within joints).

Sealed Joints: Form nonexpansion, but movable, joints in metal to accommodate elastomeric sealant to comply with SMACNA standards. Fill joint with sealant and form metal to completely conceal sealant.

Use joint adhesive for nonmoving joints.

Seams: Fabricate nonmoving seams in aluminum with flat-lock seams. Form seams and seal with epoxy seam sealer. Rivet joints for additional strength.

Separations: Separate metal from noncompatible metal or corrosive substrates by coating concealed surfaces, at locations of contact, with asphalt mastic or other permanent separation as recommended by manufacturer.

Underlayment: Where installing aluminum directly on cementitious or wood substrates, install a slip sheet of red-rosin paper and a course of polyethylene underlayment.

Bed flanges of Work in a thick coat of roofing cement where required for waterproof performance.

Roof-Drainage System: Install drainage items fabricated from sheet metal, with straps, adhesives, and anchors recommended by SMACNA's Manual or the item manufacturer, to drain roof in the most efficient manner.

CLEANING AND PROTECTION

Clean exposed metal surfaces, removing substances that might cause corrosion of metal or deterioration of finishes.

Provide final protection and maintain conditions that ensure sheet metal flashing and trim Work during construction is without damage or deterioration other than natural weathering at the time of Substantial Completion.

END OF SECTION 076200

autotroph
architecture.planning.sustainable design consulting
617 B Paulin St. Santa Fe, NM 87505

THIS PAGE INTENTIONALLY BLANK

PART 1 - GENERAL

RELATED DOCUMENTS

Drawings and general provisions of the Contract, including General and Supplementary Conditions and Division 1 Specification Sections, apply to this Section.

SUMMARY

This Section includes joint sealants for the following applications, including those specified by reference to this Section:

Exterior joints in the following vertical surfaces and horizontal nontraffic surfaces:

Perimeter joints between materials listed above and frames of doors, windows and louvers.
Other joints as indicated.

Exterior joints in the following horizontal traffic surfaces:

Isolation and contraction joints in cast-in-place concrete slabs.
Joints between different materials listed above.
Other joints as indicated.

Interior joints in the following vertical surfaces and horizontal nontraffic surfaces:

Joints between plumbing fixtures and adjoining walls, floors, and counters.
Other joints as indicated.

Related Sections include the following:

Division 8 Section "Glazing" for glazing sealants.

PERFORMANCE REQUIREMENTS

Provide elastomeric joint sealants that establish and maintain watertight and airtight continuous joint seals without staining or deteriorating joint substrates.

Provide joint sealants for interior applications that establish and maintain airtight and water-resistant continuous joint seals without staining or deteriorating joint substrates.

SUBMITTALS

Product Data: For each joint-sealant product indicated.

Samples for Initial Selection: Manufacturer's color charts consisting of strips of cured sealants showing the full range of colors available for each product exposed to view.

Compatibility and Adhesion Test Reports: From sealant manufacturer, indicating the following:

Materials forming joint substrates and joint-sealant backings have been tested for compatibility and adhesion with joint sealants.

Interpretation of test results and written recommendations for primers and substrate preparation needed for adhesion.

Warranties: Special warranties specified in this Section.

QUALITY ASSURANCE

Installer Qualifications: Manufacturer's authorized Installer who is approved or licensed for installation of elastomeric sealants required for this Project.

Source Limitations: Obtain each type of joint sealant through one source from a single manufacturer.

DELIVERY, STORAGE, AND HANDLING

Deliver materials to Project site in original unopened containers or bundles with labels indicating manufacturer, product name and designation, color, expiration date, pot life, curing time, and mixing instructions for multicomponent materials.

Store and handle materials in compliance with manufacturer's written instructions to prevent their deterioration or damage due to moisture, high or low temperatures, contaminants, or other causes.

PROJECT CONDITIONS

Do not proceed with installation of joint sealants under the following conditions:

When ambient and substrate temperature conditions are outside limits permitted by joint-sealant manufacturer or are below 40 deg F (5 deg C).

When joint substrates are wet.

Joint-Width Conditions: Do not proceed with installation of joint sealants where joint widths are less than those allowed by joint sealant manufacturer for applications indicated.

Joint-Substrate Conditions: Do not proceed with installation of joint sealants until contaminants capable of interfering with adhesion are removed from joint substrates.

PART 2 - PRODUCTS

MANUFACTURERS

Available Products: Subject to compliance with requirements, products that may be incorporated into the Work include, but are not limited to, products listed in other Part 2 articles.

MATERIALS, GENERAL

Compatibility: Provide joint sealants, backings, and other related materials that are compatible with one another and with joint substrates under conditions of service and application, as demonstrated by sealant manufacturer, based on testing and field experience.

VOC Content of Interior Sealants: Provide interior sealants and sealant primers that comply with the following limits for VOC content when calculated according to 40 CFR 59, Subpart D (EPA Method 24):

Sealants: 250 g/L.

Sealant Primers for Nonporous Substrates: 250 g/L.
Sealant Primers for Porous Substrates: 775 g/L.

Colors of Exposed Joint Sealants: As selected by Architect from manufacturer's full range.

ELASTOMERIC JOINT SEALANTS

Elastomeric Sealants: Comply with ASTM C 920 and other requirements indicated for each liquid-applied chemically curing sealant specified, including those referencing ASTM C 920 classifications for type, grade, class, and uses related to exposure and joint substrates.

Stain-Test-Response Characteristics: Where elastomeric sealants are specified to be nonstaining to porous substrates, provide products that have undergone testing according to ASTM C 1248 and have not stained porous joint substrates indicated for Project.

Suitability for Immersion in Liquids. Where elastomeric sealants are indicated for Use I for joints that will be continuously immersed in liquids, provide products that have undergone testing according to ASTM C 1247 and qualify for the length of exposure indicated by reference to ASTM C 920 for Class 1 or 2. Liquid used for testing sealants is deionized water, unless otherwise indicated.

Single-Component Nonsag Urethane Sealant: For vertical joints exposed to view where normal movement is anticipated.

Type and Grade: S (single component) and NS (nonsag).

Class: 100/50.

Uses Related to Exposure: T (traffic) and NT (nontraffic).

Uses Related to Joint Substrates: G, M, A, and as applicable to joint substrates indicated, O.

Acceptable Products:

Sika Corporation: Sikaflex – 15 LM.

Single-Component Pourable Urethane Sealant: For horizontal surface joints such as concrete paving joints, slab/wall junctions, and similar conditions. Not for vehicle traffic areas.

Type and Grade: S (single component) and P (pourable).

Class: 25 or 50.

Uses Related to Exposure: T (traffic) and NT (nontraffic).

Acceptable Products:

Sika Corporation, Inc.; Sikaflex - 1CSL.

Single-Component Mildew-Resistant Neutral-Curing Silicone Sealant (For Interior Use in Sanitary Areas):

Type and Grade: S (single component) and NS (nonsag).

Class: 25.

Use Related to Exposure: NT (nontraffic).

Uses Related to Joint Substrates: M, G, A, and, O.

LATEX JOINT SEALANTS

Latex Sealant (Painter's Caulk): (For Interior Vertical and Overhead Joints with Minimal Movement):

Comply with ASTM C 834, Type P, Grade NF.

Products: Available products include the following:

Chem-Calk 600; Bostik Inc.
ALEX Painters Caulk; DAP Products Inc.
AC-20; Pecora Corporation.
PSI-701; Polymeric Systems, Inc.
Sonolac; Sonneborn Building Products Div., ChemRex, Inc.
Tremflex 834; Tremco.

ACOUSTICAL JOINT SEALANTS

Acoustical Sealant for Exposed and Concealed Joints (For Joints in Walls and Ceilings with acoustic insulation.

Manufacturer's standard nonsag, paintable, nonstaining latex sealant complying with ASTM C 834 and the following:

Product effectively reduces airborne sound transmission through perimeter joints and openings in building construction as demonstrated by testing representative assemblies according to ASTM E 90.

JOINT-SEALANT BACKING

General: Provide sealant backings of material and type that are nonstaining; are compatible with joint substrates, sealants, primers, and other joint fillers; and are approved for applications indicated by sealant manufacturer based on field experience and laboratory testing.

Cylindrical Sealant Backings: ASTM C 1330, Type of the type recommended by joint-sealant manufacturer for the joint application indicated, and of size and density to control sealant depth and otherwise contribute to producing optimum sealant performance:

Type C: Closed-cell material with a surface skin.
Type O: Open-cell material.
Type B: Bicellular material with a surface skin.
Type: Any material indicated above.

Bond-Breaker Tape: Polyethylene tape or other plastic tape recommended by sealant manufacturer for preventing sealant from adhering to rigid, inflexible joint-filler materials or joint surfaces at back of joint where such adhesion would result in sealant failure. Provide self-adhesive tape where applicable.

MISCELLANEOUS MATERIALS

Primer: Material recommended by joint-sealant manufacturer where required for adhesion of sealant to joint substrates indicated, as determined from preconstruction joint-sealant-substrate tests and field tests.

Cleaners for Nonporous Surfaces: Chemical cleaners acceptable to manufacturers of sealants and sealant backing materials, free of oily residues or other substances capable of staining or harming joint substrates and adjacent nonporous surfaces in any way, and formulated to promote optimum adhesion of sealants to joint substrates.

Masking Tape: Nonstaining, nonabsorbent material compatible with joint sealants and surfaces adjacent to joints.

PART 3 - EXECUTION

EXAMINATION

Examine joints indicated to receive joint sealants, with Installer present, for compliance with requirements for joint configuration, installation tolerances, and other conditions affecting joint-sealant performance.

Proceed with installation only after unsatisfactory conditions have been corrected.

PREPARATION

Surface Cleaning of Joints: Clean out joints immediately before installing joint sealants to comply with joint-sealant manufacturer's written instructions and the following requirements:

Remove all foreign material from joint substrates that could interfere with adhesion of joint sealant, including dust, paints (except for permanent, protective coatings tested and approved for sealant adhesion and compatibility by sealant manufacturer), old joint sealants, oil, grease, waterproofing, water repellents, water, surface dirt, and frost.

Clean nonporous surfaces with chemical cleaners or other means that do not stain, harm substrates, or leave residues capable of interfering with adhesion of joint sealants. Nonporous joint substrates include the following:

Metal.
Glass.
Porcelain enamel.
Glazed surfaces of ceramic tile.

Joint Priming: Prime joint substrates, where recommended in writing by joint-sealant manufacturer, based on preconstruction joint-sealant-substrate tests or prior experience. Apply primer to comply with joint-sealant manufacturer's written instructions. Confine primers to areas of joint-sealant bond; do not allow spillage or migration onto adjoining surfaces.

Masking Tape: Use masking tape where required to prevent contact of sealant with adjoining surfaces that otherwise would be permanently stained or damaged by such contact or by cleaning methods required to remove sealant smears. Remove tape immediately after tooling without disturbing joint seal.

INSTALLATION OF JOINT SEALANTS

General: Comply with joint-sealant manufacturer's written installation instructions for products and applications indicated, unless more stringent requirements apply.

Sealant Installation Standard: Comply with recommendations in ASTM C 1193 for use of joint sealants as applicable to materials, applications, and conditions indicated.

Acoustical Sealant Application Standard: Comply with recommendations in ASTM C 919 for use of joint sealants in acoustical applications as applicable to materials, applications, and conditions indicated.

Install sealant backings of type indicated to support sealants during application and at position required to produce cross-sectional shapes and depths of installed sealants relative to joint widths that allow optimum sealant movement capability.

Do not leave gaps between ends of sealant backings.

Do not stretch, twist, puncture, or tear sealant backings.

autotroph
architecture.planning.sustainable design consulting
617 B Paulin St. Santa Fe, NM 87505

Remove absorbent sealant backings that have become wet before sealant application and replace them with dry materials.

Install bond-breaker tape behind sealants where sealant backings are not used between sealants and backs of joints.

Install sealants using proven techniques that comply with the following and at the same time backings are installed:

Place sealants so they directly contact and fully wet joint substrates.

Completely fill recesses in each joint configuration.

Produce uniform, cross-sectional shapes and depths relative to joint widths that allow optimum sealant movement capability.

Tooling of Nonsag Sealants: Immediately after sealant application and before skinning or curing begins, tool sealants according to requirements specified below to form smooth, uniform beads of configuration indicated; to eliminate air pockets; and to ensure contact and adhesion of sealant with sides of joint.

Remove excess sealant from surfaces adjacent to joints.

Use tooling agents that are approved in writing by sealant manufacturer and that do not discolor sealants or adjacent surfaces.

Provide concave joint configuration per Figure 5A in ASTM C 1193, unless otherwise indicated.

Use masking tape to protect surfaces adjacent to recessed tooled joints.

CLEANING

Clean off excess sealant or sealant smears adjacent to joints as the Work progresses by methods and with cleaning materials approved in writing by manufacturers of joint sealants and of products in which joints occur.

PROTECTION

Protect joint sealants during and after curing period from contact with contaminating substances and from damage resulting from construction operations or other causes so sealants are without deterioration or damage at time of Substantial Completion. If, despite such protection, damage or deterioration occurs, cut out and remove damaged or deteriorated joint sealants immediately so installations with repaired areas are indistinguishable from original work.

END OF SECTION 079200

SECTION 080000 - DOOR SCHEDULE

SENIOR CENTER IMPROVEMENTS

SANTA FE NEW MEXICO

No.	Location	Door						Frame				Details			Hardware Set No.	Glazing	Remarks
		Elevation	Panel Width	Panel Height	Thickness	Material	Finish	Elevation	Gage	Material	Finish	Head	Jamb	Sill			
	LUISA SENIOR CENTER																
101A	101 Mechanical	Existing	Existing	Existing	Existing	F - WD	Factory	F1	16	H.M.	Paint	1B/L-A5.2	1A/L-A5.2		L8		
104A	104 Women	D1	3'-0"	6'-8"	1-3/4"	F - WD	Factory	F1	16	H.M.	Paint	1B/L-A5.2	1A/L-A5.2		L2		
105A	105 Men	D1	3'-0"	6'-8"	1-3/4"	F - WD	Factory	F1	16	H.M.	Paint	1B/L-A5.2	1A/L-A5.2		L2		
106A [3]	106 Hall	D4	3'-0"	7'-0"	1-3/4"	FG - H.M.	Paint	F3	14	H.M.	Paint	5B/L-A5.2	5A/L-A5.2	5A/L-A5.2	L1	1" Insul Tempered	Auto Operator
106B [4]	106 Hall	D4	3'-0"	7'-0"	1-3/4"	FG - H.M.	Paint	F3	14	H.M.	Paint	5B/L-A5.2	5A/L-A5.2	5A/L-A5.2	L1	1" Insul Tempered	
107A	107 Kitchen	Existing	Existing	Existing	Existing	H.M.	Paint	Existing	Existing	H.M.	Paint				L6		Job fit hardare at frame
107B	107 Kitchen	D1	3'-0"	7'-0"	1-3/4"	NVL - WD	Factory	F1	16	H.M.	Paint	1B/L-A5.2	1A/L-A5.2		L3		
107C	107 Kitchen	D5	3'-0"	7'-0"	1-3/4"	NVL - WD	Factory	F1	16	H.M.	Paint	1B/L-A5.2	1A/L-A5.2		L3	1/4" Tempered	
108A	108 Hall	D3	3'-0"	7'-0"	1-3/4"	FG - WD	Factory	F1	16	H.M.	Paint	1B/L-A5.2	1A/L-A5.2		L7	1/4" Tempered	Hall is key side
109A	109 Storage	D1	3'-0"	7'-0"	1-3/4"	F - WD	Factory	F1	16	H.M.	Paint	1B/L-A5.2	1A/L-A5.2		L4		
109B	109 Storage	D2	(2) 3'-0"	7'-0"	1-3/4"	F - WD	Factory	F1	16	H.M.	Paint	1B/L-A5.2	1A/L-A5.2		L5		
111A	111 Mechanical	D2	(2) 3'-0"	6'-8"	1-3/4"	F - WD	Factory	F1	16	H.M.	Paint	1B/L-A5.2	1A/L-A5.2		L5		
112A	112 Closet	D1	3'-0"	7'-0"	1-3/4"	F - WD	Factory	F1	16	H.M.	Paint	1B/L-A5.2	1A/L-A5.2		L4		
113A	113 Mechanical	D1	3'-0"	6'-8"	1-3/8"	F - WD	Factory	F1	16	H.M.	Paint	1B/L-A5.2	1A/L-A5.2		L4		
114A [2]	114 Foyer	Existing	Existing	Existing	Existing	FG - H.M.	Paint	Existing	Existing	H.M.	Paint				Existing		Auto Operator
115A	115 Office 2	D3	3'-0"	7'-0"	1-3/4"	FG - WD	Factory	F1	16	H.M.	Paint	1B/L-A5.2	1A/L-A5.2		L3	1/4" Tempered	
116A	116 Office 1	D3	3'-0"	7'-0"	1-3/4"	FG - WD	Factory	F1	16	H.M.	Paint	1B/L-A5.2	1A/L-A5.2		L3	1/4" Tempered	
117A	117 Computer Rm	D3	3'-0"	7'-0"	1-3/4"	FG - WD	Factory	F4	16	H.M.	Paint	4B/L-A5.2	3A/L-A5.2	3A/L-A5.2	L3	1/4" Tempered	
118A	118 Instruction Rm	D3	3'-0"	7'-0"	1-3/4"	FG - WD	Factory	Existing	Existing	H.M.	Paint				L3	1/4" Tempered	Job fit door,hdwr @ frame
118B	118 Instruction Rm	D1	3'-0"	7'-0"	1-3/4"	F - WD	Factory	F2	16	H.M.	Paint	2B/L-A5.2	2A/L-A5.2		L4		

[2] All Door work (except painting) per Alternate L2

[3] All Door work (except painting) per Alternate L3

[4] All Door work (except painting) per Alternate L4

No.	Location	Door						Frame				Details			Hardware Set No.	Glazing	Remarks
		Elevation	Panel Width	Panel Height	Thickness	Material	Finish	Elevation	Gage	Material	Finish	Head	Jamb	Sill			
	VILLA CONSUELO SENIOR CENTER																
101A [5]	101 Office 1	D1	3'-0"	6'-8"	1-3/4″	F - WD	Factory	F1	16	H.M.	Paint	1B/VC-A5.1	1A/VC-A5.1		V6		
102A	102 Office 2	D3	3'-0″	7'-0"	1-3/4″	FG - H.M.	Paint	F2	14	H.M.	Paint	4B/VC-A5.1	4A/VC-A5.1		V4	1" Insul Tempered	Reinstall screen door (PTD)
102B [5]	102 Office 2	D1	3'-0″	6'-8″	1-3/4″	F - WD	Factory	F1	16	H.M.	Paint	1B/VC-A5.1	1A/VC-A5.1		V5		
103A	103 Lobby	D3	3'-0″	7'-0″	1-3/4″	FG - H.M.	Paint	F2	14	H.M.	Paint	4B/VC-A5.1	4A/VC-A5.1		V3	1" Insul Tempered	
105A [5]	105 Janitor	D1	2'-6″	6'-8″	1-3/4″	F - WD	Factory	F1	16	H.M.	Paint	1B/VC-A5.1	1A/VC-A5.1		V6		
106A [5]	106 Men	D1	3'-0″	6'-8″	1-3/4″	F - WD	Factory	F1	16	H.M.	Paint	2B/VC-A5.1	2A/VC-A5.1		V7		
107A [5]	107 Women	D1	3'-0″	6'-8″	1-3/4″	F - WD	Factory	F1	16	H.M.	Paint	1B/VC-A5.1	1A/VC-A5.1		V7		
108A	108 Mail	D3	3'-0″	7'-0″	1-3/4″	FG - H.M.	Paint	F2	14	H.M.	Paint	4B/VC-A5.1	4A/VC-A5.1		V3	1" Insul Tempered	
109A	109 Community Rm	D3	3'-0″	7'-0″	1-3/4″	FG - H.M.	Paint	F2	14	H.M.	Paint	4B/VC-A5.1	4A/VC-A5.1		V1	1" Insul Tempered	
110A	110 Laundry	D3	3'-0″	7'-0″	1-3/4″	FG - H.M.	Paint	F2	14	H.M.	Paint	4B/VC-A5.1	4A/VC-A5.1		V2	1" Insul Tempered	
110B	110 Laundry	D3	3'-0″	6'-8″	1-3/4″	FG - H.M.	Paint	F2	14	H.M.	Paint	4B/VC-A5.1	4A/VC-A5.1		V2	1" Insul Tempered	
111A [5]	111 Crafts	D2	3'-0″	6'-8″	1-3/4″	FG - WD	Factory	F1	16	H.M.	Paint	1B/VC-A5.1	1A/VC-A5.1		V6	1/4" Tempered	
112A	112 Mechanical	D1	3'-0″	7'-0″	1-3/4″	F - H.M.	Paint	F2	14	H.M.	Paint	4B/VC-A5.1	4A/VC-A5.1		V4		Louver per elevation
113A [5]	113 Closet	D1	2'-8"	7'-0″	1-3/4″	F - WD	Factory	F1	16	H.M.	Paint	1B/VC-A5.1	1A/VC-A5.1		V6		

[5] All interior door work (except painting) per Alternate V5

PART 1 - GENERAL

RELATED DOCUMENTS

Drawings and general provisions of the Contract, including General and Supplementary Conditions and Division 1 Specification Sections, apply to this Section.

SUMMARY

This Section includes the following:

Hollow-metal steel doors.
Hollow-metal steel frames.

Related Sections include the following:

Division 8 Section "Glazing" for glazed lites in steel doors and frames.
Division 8 Sections for door hardware for steel doors.
Division 9 painting Sections for field painting steel doors and frames.

DEFINITIONS

Minimum Thickness: Minimum thickness of base metal without coatings.

SUBMITTALS

Product Data: Include construction details, material descriptions, core descriptions, label compliance, and finishes for each type of steel door and frame specified.

Shop Drawings: In addition to requirements below, provide a schedule of standard steel doors and frames using same reference numbers for details and openings as those on Drawings:

Elevations of each door design.
Details of doors, including vertical and horizontal edge details.
Frame details for each frame type, including dimensioned profiles.
Details and locations of reinforcement and preparations for hardware.
Details of each different wall opening condition.
Details of anchorages, accessories, joints, and connections.
Details of glazing frames and stops showing glazing.
Details of conduit and preparations for electrified door hardware and controls if required.

QUALITY ASSURANCE

Source Limitations: Obtain standard steel doors and frames through one source from a single manufacturer.

DELIVERY, STORAGE, AND HANDLING

Deliver doors and frames palletized, wrapped, or crated to provide protection during transit and Project-site storage. Do not use nonvented plastic.

Deliver welded frames with two removable spreader bars across bottom of frames, tack welded to jambs and mullions.

Store doors and frames under cover at Project site. Place units in a vertical position with heads up, spaced by blocking, on minimum 4-inch- (102-mm-) high wood blocking. Avoid using nonvented plastic or canvas shelters that could create a humidity chamber.

If wrappers on doors become wet, remove cartons immediately. Provide minimum 1/4-inch (6-mm) space between each stacked door to permit air circulation.

PROJECT CONDITIONS

Field Measurements: Verify openings by field measurements before fabrication and indicate measurements on Shop Drawings. Many of the door frames are being installed in openings with existing wood frames. Verify existing rough openings at existing frames prior to ordering.

Established Dimensions: At new openings where field measurements cannot be made without delaying the Work, establish opening dimensions and proceed with fabricating standard steel frames without field measurements. Coordinate wall construction to ensure that actual opening dimensions correspond to established dimensions.

PART 2 - PRODUCTS

MANUFACTURERS

Available Manufacturers: Subject to compliance with requirements, manufacturers offering products that may be incorporated into the Work include, but are not limited to, the following:

Manufacturers: Subject to compliance with requirements, provide products by one of the following:

Amweld Building Products, LLC.
Ceco Door Products; an ASSA ABLOY Group Company.
CURRIES Company; an ASSA ABLOY Group Company.
Pioneer Industries, Inc.
Republic Builders Products Company.
Steelcraft; an Ingersoll-Rand Company.

MATERIALS

Cold-Rolled Steel Sheet: ASTM A 1008/A 1008M, Commercial Steel (CS), Type B; suitable for exposed applications.

Hot-Rolled Steel Sheet: ASTM A 1011/A 1011M, Commercial Steel (CS), Type B; free of scale, pitting, or surface defects; pickled and oiled.

Metallic-Coated Steel Sheet: ASTM A 653/A 653M, Commercial Steel (CS), Type B; with minimum A40 (ZF120) zinc-iron-alloy (galvannealed) coating designation.

Electrolytic Zinc-Coated Steel Sheet: ASTM A 591/A 591M, Commercial Steel (CS), Class B coating; mill phosphatized.

Supports and Anchors: After fabricating, galvanize units to be built into exterior walls according to ASTM A 153/A 153M, Class B.

Inserts, Bolts, and Fasteners: Provide items to be built into exterior walls, hot-dip galvanized according to ASTM A 153/A 153M.

Powder-Actuated Fasteners in Concrete: Fastener system of type suitable for application indicated, fabricated from corrosion-resistant materials, with clips or other accessory devices for attaching standard steel door frames of type indicated.

Mineral-Fiber Insulation: ASTM C 665, Type I (blankets without membrane facing); consisting of fibers manufactured from slag or rock wool with 6- to 12-lb/cu. ft. (96- to 192-kg/cu. m) density; with maximum flame-spread and smoke-developed indexes of 25 and 50 respectively; passing ASTM E 136 for combustion characteristics.

Glazing: Comply with requirements in Division 8 Section "Glazing."

STEEL DOORS

General: Provide doors of design indicated, not less than thickness indicated; fabricated with smooth surfaces, without visible joints or seams on exposed faces, unless otherwise indicated. Comply with ANSI A250.8.

Design: As indicated on Drawings.

Core Construction: Manufacturer's standard polystyrene or polyurethane core that produces doors complying with ANSI A250.8.

Thermal-Rated (Insulated) Doors: Where indicated, provide doors fabricated with thermal-resistance value (R-value) of not less than 4.0 deg F x h x sq. ft./Btu (0.704 K x sq. m/W) when tested according to ASTM C 1363.

Locations: Exterior doors.

Vertical Edges for Single-Acting Doors: Beveled edge at lock side and square edge at hinge side.

Beveled Edge: 1/8 inch in 2 inches (3 mm in 50 mm).

Top and Bottom Edges: Closed with flush or inverted 0.042-inch- (1.0-mm-) thick end closures or channels of same material as face sheets.

Tolerances: Comply with SDI 117, "Manufacturing Tolerances for Standard Steel Doors and Frames."

Exterior Doors: Face sheets fabricated from metallic-coated steel sheet. Provide doors complying with requirements indicated below by referencing ANSI A250.8 for level and model and ANSI A250.4 for physical-endurance level:

Level 3 and Physical Performance Level A (Extra Heavy Duty), Model 2 (Seamless) and 3 (Stile and Rail) as indicated.

Hardware Reinforcement: Fabricate reinforcement plates from same material as door face sheets to comply with the following minimum sizes:

Hinges: Minimum 0.123 inch (3.0 mm) thick by 1-1/2 inches (38 mm) wide by 6 inches (152 mm) longer than hinge, secured by not less than 6 spot welds.

Pivots: Minimum 0.167 inch (4.2 mm) thick by 1-1/2 inches (38 mm) wide by 6 inches (152 mm) longer than hinge, secured by not less than 6 spot welds.

Lock Face Closers, and Concealed Holders: Minimum 0.067 inch (1.7 mm) thick.

All Other Surface-Mounted Hardware: Minimum 0.067 inch (1.7 mm) thick.

Fabricate concealed stiffeners and hardware reinforcement from either cold- or hot-rolled steel sheet.

Metal Louvers: Door manufacturer's standard exterior metal louvers unless otherwise indicated.

Blade Type: Weather resistant, vision proof inverted V or inverted Y.

Metal and Finish: Galvanized steel, 0.040 inch thick, factory primed for paint finish.

Provide insect screen

STANDARD STEEL FRAMES

General: Comply with ANSI A250.8 and with details indicated for type and profile.

Exterior Frames: Fabricated from metallic-coated steel sheet.

Fabricate frames with mitered or coped and welded face corners and seamless face joints.

Frames for Level 3 Steel Doors: 0.067-inch- (1.7-mm-) thick steel sheet.

Interior Frames: Fabricated from cold-rolled steel sheet, unless otherwise indicated to comply with exterior frame requirements.

Fabricate knocked-down, drywall slip-on frames for in-place gypsum board partitions.

Frames for Wood Doors: 0.042-inch- (1.0-mm-).

Hardware Reinforcement: Fabricate reinforcement plates from same material as frames to comply with the following minimum sizes:

Hinges: Minimum 0.123 inch (3.0 mm) thick by 1-1/2 inches (38 mm) wide by 6 inches (152 mm) longer than hinge, secured by not less than 6 spot welds.

Lock Face, Flush Bolts, Closers, and Concealed Holders: Minimum 0.067 inch (1.7 mm) thick.

All Other Surface-Mounted Hardware: Minimum 0.067 inch (1.7 mm) thick.

Supports and Anchors: Fabricated from electrolytic zinc-coated or metallic-coated steel sheet.

Jamb Anchors:

Stud-Wall Type: Designed to engage stud, welded to back of frames; not less than 0.042 inch (1.0 mm) thick.

Compression Type for Slip-on Frames: Adjustable compression anchors.

Manufacturer’s standard existing wall anchor where frame is indicated to be fastened to jamb studs at exterior locations.

Floor Anchors: Formed from same material as frames, not less than 0.042 inch (1.0 mm) thick, and as follows:

Monolithic Concrete Slabs: Clip-type anchors, with two holes to receive fasteners.

Fabricate concealed stiffeners and hardware reinforcement from either cold- or hot-rolled steel sheet.

STOPS AND MOLDINGS

Moldings for Glazed Lites in Doors: Minimum 0.032 inch (0.8 mm) thick, fabricated from same material as door face sheet in which they are installed.

Fixed Frame Moldings: Formed integral with standard steel frames, minimum 5/8 inch (16 mm) high, unless otherwise indicated.

Loose Stops for Glazed Lites in Frames: Minimum 0.032 inch (0.8 mm) thick, fabricated from same material as frames in which they are installed.

GLASS PRODUCTS

Heat-Treated Float Glass: ASTM C 1048; Type I (transparent flat glass); Quality-Q3; of class, kind, and condition indicated.

Provide Kind FT (fully tempered) float glass.

Pyrolytic-Coated Float Glass: ASTM C 1376, float glass with metallic-oxide coating applied by pyrolytic deposition process during initial manufacture, and complying with other requirements specified.

Insulating-Glass Units, General: Factory-assembled units consisting of sealed lites of glass separated by a dehydrated interspace, and complying with ASTM E 774 for Class CBA units and with requirements specified in this Article and in Part 2 "Insulating-Glass Units" Article.

Sealing System: Dual seal, with primary and secondary sealants as follows:

Manufacturer's standard sealants.

Spacer Specifications: Manufacturer's standard spacer material and construction.

Corner Construction: Manufacturer's standard corner construction.

Low-E Insulating-Glass Units at all exterior openings:

Solar Heat-Gain Coefficient (SHGC): NFRC 200 maximum SHGC of 0.40.

Thermal Transmittance: NFRC 100 maximum U-factor of 0.35 Btu/sq. ft. x h x deg F (2.0 W/sq. m x K).

Overall Unit Thickness and Thickness of Each Lite: 1” and ¼”.

Interspace Content: Air.

Outdoor Lite: Class 1 (clear) float glass.

Kind FT (fully tempered).

Indoor Lite: Class 1 (clear) float glass.

Kind FT (fully tempered).

Low-E Coating: Pyrolytic on second surface.

FABRICATION

General: Fabricate standard steel doors and frames to be rigid and free of defects, warp, or buckle. Accurately form metal to required sizes and profiles, with minimum radius for thickness of metal. Where practical, fit and assemble units in manufacturer's plant. To ensure proper assembly at Project site, clearly identify work that cannot be permanently factory assembled before shipment.

Standard Steel Doors:

Exterior Doors: Provide weep-hole openings in bottom of exterior doors to permit moisture to escape. Seal joints in top edges of doors against water penetration.

Glazed Lites: Factory cut openings in doors.

Standard Steel Frames: Where frames are fabricated in sections due to shipping or handling limitations, provide alignment plates or angles at each joint, fabricated of same thickness metal as frames.

Welded Frames: Weld flush face joints continuously; grind, fill, dress, and make smooth, flush, and invisible.

Sidelight and Transom Bar Frames: Provide closed tubular members with no visible face seams or joints; fabricated from same material as door frame. Fasten members at crossings and to jambs by butt welding.

Provide countersunk, flat- or oval-head exposed screws and bolts for exposed fasteners, unless otherwise indicated.

Floor Anchors: Weld anchors to bottom of jambs and mullions with at least four spot welds per anchor.

Jamb Anchors: Provide number and spacing of anchors as follows:

Stud-Wall Type: Locate anchors not more than 18 inches (457 mm) from top and bottom of frame. Space anchors not more than 32 inches (813 mm) o.c. and as follows:

Four anchors per jamb from 60 to 90 inches (1524 to 2286 mm) in height.

Five anchors per jamb from 90 to 96 inches (2286 to 2438 mm) in height.

Five anchors per jamb plus 1 additional anchor per jamb for each 24 inches (610 mm) or fraction thereof more than 96 inches (2438 mm) in height.

Two anchors per head for frames more than 42 inches (1066 mm) wide and mounted in metal-stud partitions.

Compression Type: Not less than two anchors in each jamb.

Hardware Preparation: Factory prepare standard steel doors and frames to receive templated mortised hardware; include cutouts, reinforcement, mortising, drilling, and tapping, according to the Door Hardware Schedule and templates furnished as specified in Division 8 Section "Door Hardware."

Reinforce doors and frames to receive nontemplated mortised and surface-mounted door hardware.

Comply with applicable requirements in ANSI A250.6 and ANSI/DHI A115 Series specifications for door and frame preparation for hardware. Locate hardware as indicated on Shop Drawings or, if not indicated, according to ANSI A250.8.

Stops and Moldings: Provide stops and moldings around glazed lites where indicated. Form corners of stops and moldings with butted or mitered hairline joints.

Single Glazed Lites: Provide fixed stops and moldings welded on secure side of door or frame.

Multiple Glazed Lites: Provide fixed and removable stops and moldings such that each glazed lite is capable of being removed independently.

Provide fixed frame moldings on outside of exterior and on secure side of interior doors and frames.

Provide loose stops and moldings on inside of doors and frames.

Coordinate rabbet width between fixed and removable stops with type of glazing and type of installation indicated.

STEEL FINISHES

General: Comply with NAAMM's "Metal Finishes Manual for Architectural and Metal Products" for recommendations for applying and designating finishes.

Finish standard steel door and frames after assembly.

Metallic-Coated Steel Surface Preparation: Clean surfaces with nonpetroleum solvent so surfaces are free of oil and other contaminants. After cleaning, apply a conversion coating suited to the organic coating to be applied over it. Clean welds, mechanical connections, and abraded areas, and apply galvanizing repair paint specified below to comply with ASTM A 780.

Galvanizing Repair Paint: High-zinc-dust-content paint for regalvanizing welds in steel, complying with SSPC-Paint 20.

Steel Surface Preparation: Clean surfaces to comply with SSPC-SP 1, "Solvent Cleaning"; remove dirt, oil, grease, or other contaminants that could impair paint bond. Remove mill scale and rust, if present, from uncoated steel; comply with SSPC-SP 3, "Power Tool Cleaning," or SSPC-SP 6/NACE No. 3, "Commercial Blast Cleaning."

Factory Priming for Field-Painted Finish: Apply shop primer specified below immediately after surface preparation and pretreatment. Apply a smooth coat of even consistency to provide a uniform dry film thickness of not less than 0.7 mils (0.018 mm).

Shop Primer: Manufacturer's standard, fast-curing, lead- and chromate-free primer complying with ANSI A250.10 acceptance criteria; recommended by primer manufacturer for substrate; compatible with substrate and field-applied finish paint system indicated; and providing a sound foundation for field-applied topcoats despite prolonged exposure.

PART 3 - EXECUTION

EXAMINATION

Examine substrates, areas, and conditions, with Installer present, for compliance with requirements for installation tolerances and other conditions affecting performance of standard steel doors and frames.

Proceed with installation only after unsatisfactory conditions have been corrected.

PREPARATION

Remove welded-in shipping spreaders installed at factory.

Prior to installation and with installation spreaders in place, adjust and securely brace standard steel door frames for squareness, alignment, twist, and plumb to the following tolerances:

Squareness: Plus or minus 1/16 inch (1.6 mm), measured at door rabbet on a line 90 degrees from jamb perpendicular to frame head.

Alignment: Plus or minus 1/16 inch (1.6 mm), measured at jambs on a horizontal line parallel to plane of wall.

Twist: Plus or minus 1/16 inch (1.6 mm), measured at opposite face corners of jambs on parallel lines, and perpendicular to plane of wall.

Plumbness: Plus or minus 1/16 inch (1.6 mm), measured at jambs on a perpendicular line from head to floor.

Drill and tap doors and frames to receive nontemplated mortised and surface-mounted door hardware.

INSTALLATION

General: Provide doors and frames of sizes, thicknesses, and designs indicated. Install standard steel doors and frames plumb, rigid, properly aligned, and securely fastened in place; comply with Drawings and manufacturer's written instructions.

Standard Steel Frames: Install standard steel frames for doors, sidelights, transoms and other openings, of size and profile indicated. Comply with SDI 105.

Set frames accurately in position; plumbed, aligned, and braced securely until permanent anchors are set. After wall construction is complete, remove temporary braces, leaving surfaces smooth and undamaged.

Install frames with removable glazing stops located on secure side of opening.

Remove temporary braces necessary for installation only after frames have been properly set and secured.

Check plumb, squareness, and twist of frames as walls are constructed. Shim as necessary to comply with installation tolerances.

Floor Anchors: Provide floor anchors for each jamb and mullion that extends to floor and secure with postinstalled expansion anchors.

In-Place Gypsum Board Partitions: Secure frames in place with postinstalled expansion anchors through floor anchors at each jamb. Countersink anchors, and fill and make smooth, flush, and invisible on exposed faces.

Installation Tolerances: Adjust standard steel door frames for squareness, alignment, twist, and plumb to the following tolerances:

Squareness: Plus or minus 1/16 inch (1.6 mm), measured at door rabbet on a line 90 degrees from jamb perpendicular to frame head.

Alignment: Plus or minus 1/16 inch (1.6 mm), measured at jambs on a horizontal line parallel to plane of wall.

Twist: Plus or minus 1/16 inch (1.6 mm), measured at opposite face corners of jambs on parallel lines, and perpendicular to plane of wall.

Plumbness: Plus or minus 1/16 inch (1.6 mm), measured at jambs at floor.

Standard Steel Doors: Fit hollow-metal doors accurately in frames, within clearances specified below. Shim as necessary.

Non-Fire-Rated Standard Steel Doors:

Jambs and Head: 1/8 inch (3 mm) plus or minus 1/16 inch (1.6 mm).

Between Edges of Pairs of Doors: 1/8 inch (3 mm) plus or minus 1/16 inch (1.6 mm).

Between Bottom of Door and Top of Threshold: Maximum 3/8 inch (9.5 mm).

Between Bottom of Door and Top of Finish Floor (No Threshold): Maximum 3/4 inch (19 mm).

Glazing: Comply with installation requirements in Division 8 Section "Glazing" and with standard steel door and frame manufacturer's written instructions.

Secure stops with countersunk flat- or oval-head machine screws spaced uniformly not more than 9 inches (230 mm) o.c., and not more than 2 inches (50 mm) o.c. from each corner.

ADJUSTING AND CLEANING

Final Adjustments: Check and readjust operating hardware items immediately before final inspection. Leave work in complete and proper operating condition. Remove and replace defective work, including standard steel doors or frames that are warped, bowed, or otherwise unacceptable.

Clean grout and other bonding material off standard steel doors and frames immediately after installation.

Prime-Coat Touchup: Immediately after erection, sand smooth rusted or damaged areas of prime coat and apply touchup of compatible air-drying primer.

Galvannealed Surfaces: Clean abraded areas and repair with galvanizing repair paint according to manufacturer's written instructions.

END OF SECTION 081113

THIS PAGE INTENTIONALLY BLANK

PART 1 - GENERAL

RELATED DOCUMENTS

Drawings and general provisions of the Contract, including General and Supplementary Conditions and Division 1 Specification Sections, apply to this Section.

SUMMARY

This Section includes the following:

Solid-core doors with wood-veneer, faces.
Factory finishing flush wood doors.
Factory fitting flush wood doors to frames and factory machining for hardware.
Louvers for flush wood doors.

SUBMITTALS

Product Data: For each type of door. Include details of core and edge construction and trim for openings. Include factory-finishing specifications.

Shop Drawings: Indicate location, size, and hand of each door; elevation of each kind of door; construction details not covered in Product Data; location and extent of hardware blocking; and other pertinent data.

Indicate dimensions and locations of mortises and holes for hardware.
Indicate dimensions and locations of cutouts.
Indicate doors to be factory finished and finish requirements.

Samples for Verification:

Factory finishes applied to actual door face materials, approximately 8 by 10 inches (200 by 250 mm), for each material and finish. For each wood species and transparent finish, provide set of three samples showing typical range of color and grain to be expected in the finished work.

QUALITY ASSURANCE

Source Limitations: Obtain flush wood doors through one source from a single manufacturer.

Quality Standard: Comply with NWWDA I.S.1-A, "Architectural Wood Flush Doors."

DELIVERY, STORAGE, AND HANDLING

Comply with requirements of referenced standard and manufacturer's written instructions.

Package doors individually in plastic bags or cardboard cartons.

Mark each door on top and bottom rail with opening number used on Shop Drawings.

PROJECT CONDITIONS

Environmental Limitations: Do not deliver or install doors until building is enclosed, wet work is complete, and HVAC system is operating and will maintain temperature and relative humidity at occupancy levels during the remainder of the construction period.

WARRANTY

Special Warranty: Manufacturer's standard form, signed by manufacturer, Installer, and Contractor, in which manufacturer agrees to repair or replace doors that are defective in materials or workmanship, have warped (bow, cup, or twist) more than 1/4 inch (6.4 mm) in a 42-by-84-inch (1067-by-2134-mm) section, or show telegraphing of core construction in face veneers exceeding 0.01 inch in a 3-inch (0.25 mm in a 75-mm) span.

Warranty shall also include installation and finishing that may be required due to repair or replacement of defective doors.

Warranty shall be in effect during the following period of time from date of Substantial Completion:

Solid-Core Interior Doors: Life of installation.

PART 2 - PRODUCTS

MANUFACTURERS

Available Manufacturers: Subject to compliance with requirements, manufacturers offering products that may be incorporated into the Work include, but are not limited to, the following:

Flush Wood Doors:

Algoma Hardwoods Inc.
Ampco Products, Inc.
Eggers Industries; Architectural Door Division.
GRAHAM Manufacturing Corp.
Haley Brothers, Inc.
Lambton Doors.
Mohawk Flush Doors, Inc.
Vancouver Door Company, Inc.
VT Industries Inc.
Weyerhaeuser Company.

DOOR CONSTRUCTION, GENERAL

Adhesives: Do not use adhesives containing urea formaldehyde.

Doors for Transparent Finish:

Grade: Custom (Grade A faces).
Species and Cut: Red oak, plain sliced.
Match between Veneer Leaves: Book match.
Assembly of Veneer Leaves on Door Faces: Running match.
Pair and Set Match: Provide for doors hung in same opening or separated only by mullions.

SOLID-CORE DOORS

Particleboard Cores: Comply with the following requirements:

Particleboard: ANSI A208.1, Grade [LD-1] [LD-2].

Use particleboard made with binder containing no urea-formaldehyde resin.

Blocking: Provide wood blocking in particleboard-core doors as needed to eliminate through-bolting hardware and as follows:

5-inch (125-mm) top-rail blocking, in doors indicated to have closers.
5-inch (125-mm) bottom-rail blocking, in doors indicated to have kick, mop, or armor plates.
5-inch (125-mm) midrail blocking, in doors indicated to have exit devices.

Provide doors with either glued-block or structural composite lumber cores instead of particleboard cores at locations where exit devices are indicated.

Interior Veneer-Faced Doors:

Core: Particleboard, glued block or structural composite lumber.

Construction: Five or seven plies with stiles and rails bonded to core, then entire unit abrasive planed before veneering.

LIGHT FRAMES

Wood Beads for Light Openings in Wood Doors:

Wood Species: Same species as door faces.
Profile: Flush rectangular beads.

FABRICATION

Factory fit doors to suit frame-opening sizes indicated, with the following uniform clearances and bevels, unless otherwise indicated:

Comply with clearance requirements of referenced quality standard for fitting. Comply with requirements in NFPA 80 for fire-rated doors.

Factory machine doors for hardware that is not surface applied. Locate hardware to comply with DHI-WDHS-3. Comply with final hardware schedules, door frame Shop Drawings, DHI A115-W series standards, and hardware templates.

Coordinate measurements of hardware mortises in metal frames to verify dimensions and alignment before factory machining.

Light Openings: Trim openings with moldings of material and profile indicated.

FACTORY FINISHING

General: Comply with referenced quality standard.

Finish doors at factory.

Transparent Finish:

Grade: Custom.
Finish: NWWDA I.S.1-A System TR-6 catalyzed polyurethane.
Staining: None required.
Effect: Open-grain finish.
Sheen: Satin.

GLASS PRODUCTS

Heat-Treated Float Glass: ASTM C 1048; Type I (transparent flat glass); Quality-Q3; of class, kind, and condition indicated.

Provide Kind FT (fully tempered) float glass.

Thickness of each lite: ¼".

PART 3 - EXECUTION

EXAMINATION

Examine doors and installed door frames before hanging doors.

Verify that frames comply with indicated requirements for type, size, location, and swing characteristics and have been installed with level heads and plumb jambs.

Reject doors with defects.

Proceed with installation only after unsatisfactory conditions have been corrected.

INSTALLATION

Hardware: For installation, see Division 8 Section "Door Hardware."

Manufacturer's Written Instructions: Install doors to comply with manufacturer's written instructions, referenced quality standard, and as indicated.

Factory-Fitted Doors: Align in frames for uniform clearance at each edge.

Factory-Finished Doors: Restore finish before installation if fitting or machining is required at Project site.

ADJUSTING

Operation: Rehang or replace doors that do not swing or operate freely.

Finished Doors: Replace doors that are damaged or do not comply with requirements. Doors may be repaired or refinished if work complies with requirements and shows no evidence of repair or refinishing.

END OF SECTION 081416

SECTION 085000 - WINDOW SCHEDULE

SENIOR CENTER IMPROVEMENTS

SANTA FE NEW MEXICO

No.	Location	Type	Elevation	Material	Exterior Color	Rough Opening		Unit Dimensions		Details			Glazing	Remarks
						Width	Height	Width	Height	Head	Jamb	Sill		
	LUISA SENIOR CENTER													
117A	117 Computer Room	Fixed/Awning	W1	Alum Clad Wood	Hartford Green	3'-5 3/4"	5'-4 3/4"	3'-5"	5'-4"	1C/L-A3.1	7E/L-A5.1	3A/L-A3.1	See Spec	
118A	118 Instruction Room	Fixed/Awning	W2	Alum Clad Wood	Hartford Green	3'-5 3/4"	6'-4 3/4"	3'-5"	6'-4"	3C/L-A3.1	7A/L-A5.1	3A/L-A3.1	See Spec	
118B	118 Instruction Room	Fixed/Awning	W2	Alum Clad Wood	Hartford Green	3'-5 3/4"	6'-4 3/4"	3'-5"	6'-4"	3C/L-A3.1	7A/L-A5.1	3A/L-A3.1	See Spec	
118C	118 Instruction Room	Fixed/Awning	W3	Alum Clad Wood	Hartford Green	1'-5 3/4"	6'-4 3/4"	1'-5"	6'-4"	3C/L-A3.1	7A & 7D/L-A5.1	3A/L-A3.1	See Spec	
118D	118 Instruction Room	Fixed/Awning	W3	Alum Clad Wood	Hartford Green	1'-5 3/4"	6'-4 3/4"	1'-5"	6'-4"	3C/L-A3.1	7A/L-A5.1	3A/L-A3.1	See Spec	
118E	118 Instruction Room	Fixed/Awning	W2	Alum Clad Wood	Hartford Green	3'-5 3/4"	6'-4 3/4"	3'-5"	6'-4"	3C/L-A3.1	7A/L-A5.1	3A/L-A3.1	See Spec	
118F	118 Instruction Room	Fixed/Awning	W2	Alum Clad Wood	Hartford Green	3'-5 3/4"	6'-4 3/4"	3'-5"	6'-4"	3C/L-A3.1	7A/L-A5.1	3A/L-A3.1	See Spec	
118G	118 Instruction Room	Fixed/Awning	W2	Alum Clad Wood	Hartford Green	3'-5 3/4"	6'-4 3/4"	3'-5"	6'-4"	3C/L-A3.1	7A/L-A5.1	3A/L-A3.1	See Spec	

THIS PAGE INTENTIONALLY BLANK

PART 1 - GENERAL

RELATED DOCUMENTS

Drawings and general provisions of the Contract, including General and Supplementary Conditions and Division 1 Specification Sections, apply to this Section.

SUMMARY

Section includes aluminum-clad wood windows.

PREINSTALLATION MEETINGS

ACTION SUBMITTALS

Product Data: For each type of product.

Include construction details, material descriptions, glazing and fabrication methods, dimensions of individual components and profiles, hardware, and finishes for wood windows.

Shop Drawings: Include plans, elevations, sections, hardware, accessories, insect screens, operational clearances, and details of installation, including anchor, flashing, and sealant installation.

Samples: For each exposed product and for each color specified, 2 by 4 inches (50 by 100 mm) in size.

Samples for Verification: For wood windows and components required, prepared on Samples of size indicated below:

Exposed Finishes: 2 by 4 inches (50 by 100 mm).
Exposed Hardware: Full-size units.

Product Schedule: For wood windows. Use same designations indicated on Drawings.

INFORMATIONAL SUBMITTALS

Qualification Data: For manufacturer and Installer.

Product Test Reports: For each type of wood window, for tests performed by a qualified testing agency.

Sample Warranties: For manufacturer's warranties.

QUALITY ASSURANCE

Installer Qualifications: An installer acceptable to wood window manufacturer or supplier for installation of units required for this Project.

WARRANTY

Manufacturer's Warranty: Manufacturer agrees to repair or replace wood windows that fail in materials or workmanship within specified warranty period.

Failures include, but are not limited to, the following:

Failure to meet performance requirements.
Structural failures including excessive deflection, water leakage, and air infiltration.

Faulty operation of movable sash and hardware.
Deterioration of materials and finishes beyond normal weathering.
Failure of insulating glass.

Warranty Period:

Window: 10 years from date of Substantial Completion.
Glazing Units, Non-laminated: 20 years from date of Substantial Completion.
Glazing Units, Laminated: 10 years from date of Substantial Completion.
Aluminum-Cladding Finish: 10 years minimum from date of Substantial Completion.

PART 2 - PRODUCTS

MANUFACTURERS

Basis-of-Design Product: Subject to compliance with requirements, provide Pella Corporation Architect Series®. The intention is to match existing window. No substitutions permitted.

WINDOW PERFORMANCE REQUIREMENTS

Product Standard: Comply with AAMA/WDMA/CSA 101/I.S.2/A440 for definitions and minimum standards of performance, materials, components, accessories, and fabrication unless more stringent requirements are indicated.

Window Certification: WDMA Hallmark certified with label attached to each window.

Performance Class and Grade: AAMA/WDMA/CSA 101/I.S.2/A440 as follows:

Minimum Performance Class (Awning): R.
Minimum Performance Grade (Awning): 50.

Minimum Performance Class (Fixed): CW.
Minimum Performance Grade (Fixed): 45.

Thermal Transmittance: NFRC 100 maximum whole-window U-factor of 0.35 Btu/sq. ft. x h x deg F (2.0 W/sq. m x K).

Solar Heat-Gain Coefficient (SHGC): NFRC 200 maximum whole-window SHGC of 0.40.

WOOD WINDOWS

Operating Types: Provide the following operating types in locations indicated on Drawings:

Awning: Project out.
Fixed.

Frames and Sashes: Fine-grained wood lumber complying with AAMA/WDMA/CSA 101/I.S.2/A440; kiln dried to a moisture content of not more than 12 percent at time of fabrication; free of visible finger joints, blue stain, knots, pitch pockets, and surface checks larger than 1/32 inch (0.8 mm) deep by 2 inches (51 mm) wide; water-repellent preservative treated.

Exterior Finish: Aluminum-clad wood.

Aluminum Finish: Manufacturer's standard fluoropolymer two-coat system with fluoropolymer color topcoat containing not less than 70 percent polyvinylidene fluoride resin by weight and complying with AAMA 2605.

Color: Hartford Green to match existing windows.

Interior Finish: Manufacturer's standard stain-and varnish-finish to match existing.

Exposed Unfinished Wood Surfaces: Pine to match existing.
Stain Color: To match existing windows.

Insulating-Glass Units: ASTM E 2190, certified through IGCC as complying with requirements of IGCC. Provide high altitude glazing units with hidden capillary breather tubes as recommended by window manufacturer.

Glass: ASTM C 1036, Type 1, Class 1, q3.

Tint or Pattern: Clear.

Lites: Two.

Filling: Fill space between glass lites with air (high altitude).

Low-E Coating: Sputtered on second or third surface.

Glazing System: Manufacturer's standard factory-glazing system that produces weathertight seal.

Hardware, General: Provide manufacturer's standard hardware fabricated from aluminum, stainless steel, carbon steel complying with AAMA 907, or other corrosion-resistant material compatible with adjacent materials; designed to smoothly operate, tightly close, and securely lock windows, and sized to accommodate sash weight and dimensions.

Exposed Hardware Color and Finish: Champagne to match existing windows.

Projected Window Hardware:

Gear-Type Rotary Operators: Complying with AAMA 901 when tested according to ASTM E 405, Method A. Provide operators that function without requiring the removal of interior screens.

Hinges: Manufacturer's standard type for sash weight and size indicated

Single-Handle Locking System: Operates positive-acting arms that pull sash into locked position.

Weather Stripping: Provide full-perimeter weather stripping for each operable sash unless otherwise indicated.

Fasteners: Noncorrosive and compatible with window members, trim, hardware, anchors, and other components.

Exposed Fasteners: Do not use exposed fasteners to the greatest extent possible. For application of hardware, use fasteners that match finish hardware being fastened.

ACCESSORIES

INSECT SCREENS

General: Fabricate insect screens to integrate with window frame. Provide screen for each operable exterior sash. Screen wickets are not permitted.

Type and Location: Full, inside for project-out sashes.

Aluminum Frames: Manufacturer's standard aluminum alloy complying with SMA 1004 or SMA 1201. Fabricate frames with mitered or coped joints or corner extrusions, concealed fasteners, and removable PVC spline/anchor concealing edge of frame.

Tubular Framing Sections and Cross Braces: Roll formed from aluminum sheet.

Finish for Interior Screens: Baked-on organic coating in color to match existing windows.

Glass-Fiber Mesh Fabric: Pella InView Screens to match existing with mesh of PVC-coated, glass-fiber threads; woven and fused to form a fabric mesh resistant to corrosion, shrinkage, stretch, impact damage, and weather deterioration. Comply with ASTM D 3656 and SMA 1201.

Mesh Color: Champagne to match existing window.

FABRICATION

Fabricate wood windows in sizes indicated. Include a complete system for installing and anchoring windows.

Glaze wood windows in the factory.

Weather strip each operable sash to provide weathertight installation.

Mullions: Provide mullions and cover plates, matching window units, complete with anchors for support to structure and installation of window units. Allow for erection tolerances and provide for movement of window units due to thermal expansion and building deflections. Provide mullions and cover plates capable of withstanding design wind loads of window units.

Complete fabrication, assembly, finishing, hardware application, and other work in the factory to greatest extent possible. Disassemble components only as necessary for shipment and installation. Allow for scribing, trimming, and fitting at Project site.

PART 3 - EXECUTION

EXAMINATION

Examine openings, substrates, structural support, anchorage, and conditions, with Installer present, for compliance with requirements for installation tolerances and other conditions affecting performance of the Work.

Verify rough opening dimensions, levelness of sill plate, and operational clearances.

Examine wall flashings, vapor retarders, water and weather barriers, and other built-in components to ensure weathertight window installation.

Proceed with installation only after unsatisfactory conditions have been corrected.

INSTALLATION

Comply with manufacturer's written instructions for installing windows, hardware, accessories, and other components. For installation procedures and requirements not addressed in manufacturer's written instructions, comply with installation requirements in ASTM E 2112.

Install windows level, plumb, square, true to line, without distortion, anchored securely in place to structural support, and in proper relation to wall flashing and other adjacent construction to produce weathertight construction.

Separate aluminum and other corrodible surfaces from sources of corrosion or electrolytic action. (dissimilar materials, treated lumber, etc.) at the points of contact with other materials.

For fin method of attachment, integrate window system installation with exterior water-resistant barrier using flashing/sealant tape. Apply and integrate flashing/sealant tape with water-resistant barrier using water-shed principles in accordance with window manufacturer's instructions.

Place interior seal around window perimeter to maintain continuity of building thermal and air barrier using insulating-foam sealant.

Seal window to exterior wall cladding with sealant and related backing materials at perimeter of assembly.

Leave windows closed and locked.

ADJUSTING, CLEANING, AND PROTECTION

Adjust operating sashes and hardware for a tight fit at contact points and weather stripping for smooth operation and weathertight closure.

Clean exposed surfaces immediately after installing windows. Remove excess sealants, glazing materials, dirt, and other substances.

Keep protective films and coverings in place until final cleaning.

Remove and replace sashes if glass has been broken, chipped, cracked, abraded, or damaged during construction period.

Protect window surfaces from contact with contaminating substances resulting from construction operations. If contaminating substances do contact window surfaces, remove contaminants immediately according to manufacturer's written instructions.

END OF SECTION 085200

autotroph
architecture.planning.sustainable design consulting
617 B Paulin St. Santa Fe, NM 87505

THIS PAGE INTENTIONALLY BLANK

PART 1 - GENERAL

RELATED DOCUMENTS

Drawings and general provisions of the Contract, including General and Supplementary Conditions and Division 1 Specification Sections, apply to this Section.

SUMMARY

This Section includes the following:

Door hardware for the following:

Swinging doors.

Products furnished, but not installed, under this Section include the following. Coordinating, purchasing, delivering, and scheduling remain requirements of this Section.

SUBMITTALS

Product Data: Include installation details, material descriptions, dimensions of individual components and profiles, and finishes.

Door Hardware Schedule: Prepared by or under the supervision of supplier, detailing fabrication and assembly of door hardware, as well as procedures and diagrams. Coordinate the final Door Hardware Schedule with doors, frames, and related work to ensure proper size, thickness, hand, function, and finish of door hardware.

Format: Comply with scheduling sequence and vertical format in DHI's "Sequence and Format for the Hardware Schedule."

Organization: Organize the Door Hardware Schedule into door hardware sets indicating complete designations of every item required for each door or opening.

Organize door hardware sets in same order as in the Door Hardware Schedule at the end of Part 3.

Content: Include the following information:

Identification number, location, hand, fire rating, and material of each door and frame.
Type, style, function, size, quantity and finish of each door hardware item.
Manufacturer of each item.
Fastenings and other pertinent information.
Location of each door hardware set, cross-referenced to Drawings, both on floor plans and in door and frame schedule.
Explanation of abbreviations, symbols, and codes contained in schedule.
Mounting locations for door hardware.
Door and frame sizes and materials.

Submittal Sequence: Submit the final Door Hardware Schedule at earliest possible date, particularly where approval of the Door Hardware Schedule must precede fabrication of other work that is critical in the Project construction schedule. Include Product Data, Samples, Shop Drawings of other work af-

fected by door hardware, and other information essential to the coordinated review of the Door Hardware Schedule.

Keying Schedule: Prepared by or under the supervision of supplier, detailing Owner's final keying instructions for locks. Include schematic keying diagram and index each key set to unique door designations.

Maintenance Data: For each type of door hardware to include in maintenance manuals specified in Division 1.

QUALITY ASSURANCE

Installer Qualifications: An experienced installer who has completed door hardware similar in material, design, and extent to that indicated for this Project and whose work has resulted in construction with a record of successful in-service performance.

Supplier Qualifications: Door hardware supplier with warehousing facilities in Project's vicinity and who is or employs a qualified Architectural Hardware Consultant, available during the course of the Work to consult with Contractor, Architect, and Owner about door hardware and keying.

Source Limitations: Obtain each type and variety of door hardware from a single manufacturer, unless otherwise indicated.

Regulatory Requirements: Comply with provisions of the following:

Accessibility Requirements: Where indicated to comply with accessibility requirements, comply with the U.S. Architectural & Transportation Barriers Compliance Board's "Americans with Disabilities Act (ADA), Accessibility Guidelines for Buildings and Facilities (ADAAG)", ANSI A117.1 and FED-STD-795, "Uniform Federal Accessibility Standards" whichever is more restrictive.

Handles, Pulls, Latches, Locks, and other Operating Devices: Shape that is easy to grasp with one hand and does not require tight grasping, tight pinching, or twisting of the wrist.

Door Closers: Comply with the following maximum opening-force requirements indicated:

Interior Hinged Doors: 5 lbf (22.2 N) applied perpendicular to door.

Thresholds: Not more than 1/2 inch (13 mm) high. Bevel raised thresholds with a slope of not more than 1:2.

NFPA 101: Comply with the following for means of egress doors:

Latches, Locks, and Exit Devices: Not more than 15 lbf (67 N) to release the latch. Locks shall not require the use of a key, tool, or special knowledge for operation.

Door Closers: Not more than 30 lbf (133 N) to set door in motion and not more than 15 lbf (67 N) to open door to minimum required width.

Thresholds: Not more than 1/2 inch (13 mm) high.

DELIVERY, STORAGE, AND HANDLING

Inventory door hardware on receipt and provide secure lock-up for door hardware delivered to Project site.

Tag each item or package separately with identification related to the final Door Hardware Schedule, and include basic installation instructions with each item or package.

Deliver keys to Owner.

COORDINATION

Templates: Obtain and distribute to the parties involved templates for doors, frames, and other work specified to be factory prepared for installing door hardware. Check Shop Drawings of other work to confirm that adequate provisions are made for locating and installing door hardware to comply with indicated requirements.

Existing Openings: Where new hardware components are scheduled for application to existing construction or where modifications to existing door hardware are required, field verify existing conditions and coordinate installation of door hardware to suit opening conditions and to provide for proper operation.

MAINTENANCE SERVICE

Maintenance Tools and Instructions: Furnish a complete set of specialized tools and maintenance instructions as needed for Owner's continued adjustment, maintenance, and removal and replacement of door hardware.

PART 2 - PRODUCTS

SCHEDULED DOOR HARDWARE

General: Provide door hardware for each door to comply with requirements in this Section, door hardware sets indicated in door and frame schedule, and the Door Hardware Schedule at the end of Part 3.

Door Hardware Sets: Provide quantity, item, size, finish or color indicated, and either the named manufacturer's products or products equivalent in function and comparable in quality to named products and where manufacturers are not listed, products complying with BHMA standard referenced.

Designations: Requirements for design, grade, function, finish, size, and other distinctive qualities of each type of door hardware are indicated in the Door Hardware Schedule at the end of Part 3. Products are identified by using door hardware designations, as follows:

Named Manufacturer's Products: Product designation and manufacturer are listed for each door hardware type required for the purpose of establishing minimum requirements. Manufacturers' names are abbreviated in the Door Hardware Schedule.

References to BHMA Standards: Provide products complying with these standards and requirements for description, quality, and function.

HINGES, GENERAL

Standards: Comply with the following:

Butts and Hinges: BHMA A156.1.

Template Hinge Dimensions: BHMA A156.7.

Quantity: Provide the following, unless otherwise indicated:

Two Hinges: For doors with heights up to 60 inches (1524 mm).

Three Hinges: For doors with heights 61 to 90 inches (1549 to 2286 mm).

Four Hinges: For doors with heights 91 to 120 inches (2311 to 3048 mm).

autotroph
architecture.planning.sustainable design consulting
617 B Paulin St. Santa Fe, NM 87505

Template Requirements: Provide only template-produced units.

Hinge Weight: Unless otherwise indicated, provide the following:

Entrance Doors: Heavy-weight or continuous geared hinges as scheduled.
Doors with Closers: Antifriction-bearing hinges.
Interior Doors: Standard-weight hinges.

Hinge Base Metal: Unless otherwise indicated, provide the following:

Exterior Hinges: Stainless steel, with stainless-steel pin unless otherwise scheduled.
Interior Hinges: Steel, with steel pin.

Fasteners: Comply with the following:

Machine Screws: For metal doors and frames. Install into drilled and tapped holes.
Wood Screws: For wood doors.
Screws: Phillips flat-head screws. Finish screw heads to match surface of hinges.

Hinge Options: Where indicated in door hardware sets or on Drawings:

Nonremovable Pins: Provide set screw in hinge barrel that, when tightened into a groove in hinge pin, prevents removal of pin while door is closed; for outswinging exterior doors and outswinging corridor doors with locks.

Corners: Square.

LOCKS AND LATCHES, GENERAL

Standards: Comply with the following:

Bored Locks and Latches: Exterior - BHMA A156.2, Grade 1; Series 4000. Interior - BHMA A156.2, Grade 2; Series 4000.

Lock Trim: Comply with the following:

Lever: Wrought, forged, or cast.

Escutcheon (Rose): Wrought, forged, or cast.

Dummy Trim: Match knob and lever lock trims and escutcheons.

Lock Functions: Function numbers and descriptions indicated in the Door Hardware Schedule comply with the following:

Bored Locks: BHMA A156.2.

Lock Throw: Comply with testing requirements for length of bolts to comply with labeled fire door requirements, and as follows:

Bored Locks: Minimum 1/2-inch (12.7-mm) latchbolt throw.

Deadbolts: Minimum 1-inch (25-mm) bolt throw.

Backset: 2-3/4 inches (70 mm), unless otherwise indicated. Confirm backset at replacement sets in existing doors.

Dustproof Strikes: BHMA A156.16, Grade 1.

autotroph
architecture.planning.sustainable design consulting
617 B Paulin St. Santa Fe, NM 87505

EXIT DEVICES

Exit Devices: BHMA A156.3, Grade 1.

Panic Exit Devices: Listed and labeled by a testing and inspecting agency acceptable to authorities having jurisdiction, for panic protection, based on testing according to UL 305.

CYLINDERS AND KEYING

Standards: Comply with the following:

Cylinders: BHMA A156.5, Grade 1. Bump Resistant.

Cylinders: Manufacturer's standard tumbler type, constructed from brass or bronze, stainless steel, or nickel silver, and complying with the following:

Number of Pins: Seven.

Mortise Type: Threaded cylinders with rings and straight- or clover-type cam.

Rim Type: Cylinders with back plate, flat-type vertical or horizontal tailpiece, and raised trim ring.

Bored-Lock Type: Cylinders with tailpieces to suit locks.

Permanent Cores: Manufacturer's standard; finish face to match lockset; complying with the following:

Interchangeable Cores: Core insert, removable by use of a special key, and usable with other manufacturers' cylinders.

Construction Keying: Comply with the following:

Construction Master Keys: Provide cylinders with feature that permits voiding of construction keys without cylinder removal. Provide 10 construction master keys.

Construction Cores: Provide construction cores that are replaceable by permanent cores. Provide 10 construction master keys.

Replace construction cores with permanent cores, as directed by Owner.

Keying System: Unless otherwise indicated, provide a factory-registered keying system complying with the following requirements:

Grand Master Key System: Cylinders are operated by a change key, a master key, and a grand master key.

Keys: Provide nickel-silver keys complying with the following:

Stamping: Permanently inscribe each key with a visual key control number and include the following notation:

Notation: "DO NOT DUPLICATE."

Quantity: In addition to one extra blank key for each lock, provide the following:

Cylinder Change Keys: Three.
Master Keys: Five.
Grand Master Keys: Five.

autotroph
architecture.planning.sustainable design consulting
617 B Paulin St. Santa Fe, NM 87505

CLOSERS

Standards: Comply with the following:

Closers: BHMA A156.4, Grade 1.

Certified Products: Provide door closers listed in BHMA's "Directory of Certified Door Closers."

Size of Units: Unless otherwise indicated, comply with manufacturer's written recommendations for size of door closers depending on size of door, exposure to weather, and anticipated frequency of use. Provide factory-sized closers, adjustable to meet field conditions and requirements for opening force.

All manual door closers shall be certified to exceed (10,000,000) full load operating cycles by an independent testing laboratory.

Fully hydraulic, rack and pinion action with high strength cast iron cylinders and one piece forged steel pistons.

Pinion shaft shall be a minimum diameter of 11/16"

Separate adjustments for backcheck, general; speed and latch speed.

STOPS AND HOLDERS

Standards: Comply with the following:

Stops and Bumpers: BHMA A156.16. BHMA Grade 1.

Silencers for Metal Door Frames: BHMA A156.16, Grade 1; neoprene or rubber, minimum diameter 1/2 inch (13 mm); fabricated for drilled-in application to frame.

DOOR GASKETING

Standard: BHMA A156.22.

General: Provide continuous weather-strip gasketing on exterior doors. Provide noncorrosive fasteners for exterior applications and elsewhere as indicated.

Perimeter Gasketing: Apply to head and jamb, forming seal between door and frame.
Meeting Stile Gasketing: Fasten to meeting stiles, forming seal when doors are closed.
Door Bottoms: Apply to bottom of door, forming seal with threshold when door is closed.

Air Leakage: Not to exceed 0.50 cfm per foot (0.000774 cu. m/s per m) of crack length as tested according to ASTM E 283.

Gasketing Materials: ASTM D 2000 and AAMA 701/702.

THRESHOLDS

Standard: BHMA A156.21.

Bevel raised thresholds with a slope of not more than 1:2. Provide thresholds not more than 1/2 inch (13 mm) high. All thresholds ADA compliant.

FABRICATION

Manufacturer's Nameplate: Do not provide manufacturers' products that have manufacturer's name or trade name displayed in a visible location (omit removable nameplates) except in conjunction with required fire-rated labels and as otherwise approved by Architect.

Manufacturer's identification will be permitted on rim of lock cylinders only.

Base Metals: Produce door hardware units of base metal, fabricated by forming method indicated, using manufacturer's standard metal alloy, composition, temper, and hardness. Furnish metals of a quality equal to or greater than that of specified door hardware units and BHMA A156.18 for finishes. Do not furnish manufacturer's standard materials or forming methods if different from specified standard.

Fasteners: Provide door hardware manufactured to comply with published templates generally prepared for machine, wood, and sheet metal screws. Provide screws according to commercially recognized industry standards for application intended. Provide Phillips flat-head screws with finished heads to match surface of door hardware, unless otherwise indicated.

Concealed Fasteners: For door hardware units that are exposed when door is closed, except for units already specified with concealed fasteners. Do not use through bolts for installation where bolt head or nut on opposite face is exposed unless it is the only means of securely attaching the door hardware. Where through bolts are used on hollow door and frame construction, provide sleeves for each through bolt.

Steel Machine or Wood Screws:

Mortise hinges to doors.

Strike plates to frames.

Closers to doors and frames.

Spacers or Sex Bolts: For through bolting of hollow-metal doors.

Fasteners for Wood Doors: Comply with requirements of DHI WDHS.2, "Recommended Fasteners for Wood Doors."

FINISHES

Standard: Comply with BHMA A156.18.

Protect mechanical finishes on exposed surfaces from damage by applying a strippable, temporary protective covering before shipping.

Appearance of Finished Work: Variations in appearance of abutting or adjacent pieces are acceptable if they are within one-half of the range of approved Samples. Noticeable variations in the same piece are not acceptable. Variations in appearance of other components are acceptable if they are within the range of approved Samples and are assembled or installed to minimize contrast.

PART 3 - EXECUTION

EXAMINATION

Examine doors and frames, with Installer present, for compliance with requirements for installation tolerances, labeled fire door assembly construction, wall and floor construction, and other conditions affecting performance.

Examine roughing-in for electrical power systems to verify actual locations of wiring connections before electrified door hardware installation.

Proceed with installation only after unsatisfactory conditions have been corrected.

PREPARATION

Steel Doors and Frames: Comply with DHI A115 series.

Surface-Applied Door Hardware: Drill and tap doors and frames according to SDI 107.

Wood Doors: Comply with DHI A115-W series.

INSTALLATION

Mounting Heights: Mount door hardware units at heights indicated in following applicable publications, unless specifically indicated or required to comply with governing regulations:

Standard Steel Doors and Frames: DHI's "Recommended Locations for Architectural Hardware for Standard Steel Doors and Frames."

Wood Doors: DHI WDHS.3, "Recommended Locations for Architectural Hardware for Wood Flush Doors."

Install each door hardware item to comply with manufacturer's written instructions. Where cutting and fitting are required to install door hardware onto or into surfaces that are later to be painted or finished in another way, coordinate removal, storage, and reinstallation of surface protective trim units with finishing work specified in Division 9 Sections. Do not install surface-mounted items until finishes have been completed on substrates involved.

Set units level, plumb, and true to line and location. Adjust and reinforce attachment substrates as necessary for proper installation and operation.

Drill and countersink units that are not factory prepared for anchorage fasteners. Space fasteners and anchors according to industry standards.

Thresholds: Set thresholds for exterior and acoustical doors in full bed of sealant complying with requirements specified in Division 7 Section "Joint Sealants."

ADJUSTING

Initial Adjustment: Adjust and check each operating item of door hardware and each door to ensure proper operation or function of every unit. Replace units that cannot be adjusted to operate as intended. Adjust door control devices to compensate for final operation of heating and ventilating equipment and to comply with referenced accessibility requirements.

Door Closers: Adjust sweep period so that, from an open position of 70 degrees, the door will take at least 3 seconds to move to a point 3 inches (75 mm) from the latch, measured to the leading edge of the door.

CLEANING AND PROTECTION

Clean adjacent surfaces soiled by door hardware installation.

Clean operating items as necessary to restore proper function and finish.

Provide final protection and maintain conditions that ensure door hardware is without damage or deterioration at time of Substantial Completion.

autotroph
architecture.planning.sustainable design consulting
617 B Paulin St. Santa Fe, NM 87505

HARDWARE SCHEDULE

Designations listed in this schedule refer to the following manufacturers unless otherwise notes.

Item:	Manufacturer:
Hinges	Stanley
Interior Locksets, Interior Deadbolts	Kwikset
Exit Devices, Exterior Locksets, Exterior Deadbolts	Sargent
Electronic Locks	Alarm Lock Trilogy Series
Closers	LCN Closers
Door Stops, Flush Bolts, Mail Slot, Silencers	Ives/Ingersoll Rand
Continuous Hinges, Weatherstripping, Thresholds	Pemko Mfg. Co.

General: Provide hardware for each door to comply with requirements of Section "Door Hardware," hardware set numbers indicated in door schedule, and in the following schedule of hardware sets.

LUISA

Set L1: Entrance 106A, Entrance 106B

1 Hinges; X-Series
- x geared continuous hinge
- x clear anodized
- x full mortise
- x length as required
- x standard duty

1 Exit Device; 8800 Series Rim Device
- x Exterior Trim – Electronic Lock (see below)
- x 649 strike
- x rail size as required
- x US26D

1 Electronic Lock: ETDL
- x digital only
- x 1¾" door
- x straight lever handle; S
- x US26D
- x Interchangeable Core (IC) Sargent
- x Sargent 8800 Exit Device; S88

1 Closer; #4040 XP Series (omit at Door 106A with automatic door operator)
- x adjustable delayed action cylinder
- x parallel arm (push side) mounting
- x extra duty arm
- x ADA compliant
- x standard powder coat - aluminum

1 Threshold; 276
x 7″ wide
x length as required
x ADA
x mill finish aluminum

1 Weatherstripping; 29310_P
x head and jambs
x pile insert
x clear anodized finish

1 Door shoe; 223_NB
x pile insert
x mill finish aluminum
x length as required

1 Door Protection Plates; Series 8400
x B4E - Bevel 4 edges
x CS – Counter sink holes
x 12″ high x width as required
x push side mounted
x US32D

Set L2 – Woman 104A, Men 105A

3 Hinges; FBB179
x 4½″ x 4½″
x US26D

1 Deadbolt; 660 series
x 465 single cylinder deadlock
x thumbturn
x 2¾″ backset
x strike box
x US26D

1 Closer; 4040XP Series
x adjustable delayed action cylinder
x hinge (pull) side mounting
x ADA compliant
x standard powder coat - aluminum

1 Pull Plate; 8303 Series
x 1″ diameter
x 10″ centers
x 6x16″ plate
x type F mount
x US26D

1 Push Plate; 8200
x 6x16″ plate
x US26D

autotroph
architecture.planning.sustainable design consulting
617 B Paulin St. Santa Fe, NM 87505

1 Wall Stop; #407
x US26D

1 Door Protection Plates; Series 8400
x B4E - Bevel 4 edges
x CS – Counter sink holes
x 12" high x width as required
x push side mounted
x US32D

3 Silencers; #20 (Gray)

Set L3 – Kitchen 107B, Kitchen 107C, Office 2 115A, Office 1 116A, Computer Room 117A, Instruction Room 118A, Storage 109A, Closet 112A, Mech 113A

3 Hinges; F179
x 4½" x 4½"
x US26D

1 Keyed Entry Lockset; 756KNL
x Kingston lever
x 2 3/4" backset
x ANSI strike
x strike box
x UL listed
x US26D

1 Wall Stop; #407½
x US26D

3 Silencers; #20 (Gray)

Set L4 – Instruction Room 118B

3 Hinges; F179
x 4½" x 4½"
x US26D

1 Passage Lockset; 721KNL
x Kingston lever
x 2 3/4" backset
x ANSI strike
x strike box
x UL listed
x US26D

1 Wall Stop; #407½
x US26D

3 Silencers; #20 (Gray)

autotroph
architecture.planning.sustainable design consulting
617 B Paulin St. Santa Fe, NM 87505

Set L5 – Mech 111A, Storage Closet 109B

6 Hinges; F179
x 4 1/2" x 4 1/2"
x US26D

1 Keyed Entry Lockset; 756KNL
x Kingston lever
x 2 3/4" backset
x ANSI strike on inactive leaf
x strike box on inactive leaf
x UL listed
x US26D

1 Single Dummy Trim; 788KNL
x Kington lever
x 2 3/4" backset
x US26D

2 Flush Bolt; 262
x strike
x on inactive leaf
x US26D

2 Wall Stop; #407
x US26D

1 Dust Proof Strike; DP1
x US26D

2 Silencers; #20 (Gray) (at head)

Set L6 – Kitchen 107A

1 Entrance Lockset; 10G05 (replace existing lockset in existing prime door)
x L - lever
x 2 3/4" backset
x ANSI strike (match existing frame preparation)
x strike box

1 Passage Latchset; 10U15 (replace existing latchset in existing screen door)
x Athens (ATH) lever
x confirm backset and clearance with prime door
x strike (match existing frame preparation)
x US26D

autotroph
architecture.planning.sustainable design consulting
617 B Paulin St. Santa Fe, NM 87505

Set L7 – Hall (key side Hall)

3 Hinges; FBB179
x 4½" x 4½"
x US26D

1 Exit Device; 8800 Rim Exit Device
x ANSI 08 function
x rail size as required
x 649 strike
x 700 Series ET Trim
x "B" lever
x cylinder
x US26D

1 Closer; 4040XP Series
x adjustable delayed action cylinder
x hinge (pull) side mounting
x ADA compliant
x standard powder coat - aluminum

1 Wall Stop; #407
x US26D

1 Door Protection Plates; Series 8400
x B4E - Bevel 4 edges
x CS – Counter sink holes
x 12" high x width as required
x push side mounted
x US32D

3 Silencers; #20 (Gray)

Set L8 – Mechanical Room 101A

1 Entrance Lockset; 10G05 (replace existing lockset in existing prime door)
x L - lever
x 2 3/4" backset
x ANSI strike (match existing inactive leaf preparation)
x strike box on inactive leaf
x US26D

autotroph
architecture.planning.sustainable design consulting
617 B Paulin St. Santa Fe, NM 87505

VILLA CONSUELO

Set V1: Entrance 109A

1 Hinges; X-Series
- x geared continuous hinge
- x clear anodized
- x full mortise
- x length as required
- x standard duty

1 Exit Device; 8800 Rim Exit Device
- x ANSI 08 function
- x rail size as required
- x 649 strike
- x 700 Series ET Trim
- x "B" lever
- x cylinder
- x US26D

1 Closer; #4040 XP Series
- x adjustable delayed action cylinder
- x parallel arm (push side) mounting
- x extra duty arm
- x ADA compliant
- x standard powder coat - aluminum

1 Threshold; 276
- x 7" wide
- x length as required
- x ADA
- x mill finish aluminum

1 Weatherstripping; 29310_P
- x head and jambs
- x pile insert
- x clear anodized finish

1 Door shoe; 223_NB
- x pile insert
- x mill finish aluminum
- x length as required

1 Door Protection Plates; Series 8400
- x B4E - Bevel 4 edges
- x CS – Counter sink holes
- x 12" high x width as required
- x push side mounted
- x US32D

Set V2: Laundry 110A, Laundry 110B

1 Hinges; X-Series
- x geared continuous hinge
- x clear anodized
- x full mortise
- x length as required
- x standard duty

1 Electronic Lockset: DL2700
- x WP
- x US26D
- x Interchangeable Core (IC) Sargent
- x US26D

1 Closer; #4040 XP Series
- x adjustable delayed action cylinder
- x parallel arm (push side) mounting
- x extra duty arm
- x ADA compliant
- x standard powder coat - aluminum

1 Threshold; 276
- x 7" wide
- x length as required
- x ADA
- x mill finish aluminum

1 Weatherstripping; 29310_P
- x head and jambs
- x pile insert
- x clear anodized finish

1 Door shoe; 223_NB
- x pile insert
- x mill finish aluminum
- x length as required

1 Door Protection Plates; Series 8400
- x B4E - Bevel 4 edges
- x CS – Counter sink holes
- x 12" high x width as required
- x push side mounted
- x US32D

Set V3: Lobby 103A, Mail 108A

1 Hinges; X-Series
- x geared continuous hinge
- x clear anodized
- x full mortise
- x length as required
- x standard duty

1 Deadbolt; 480 series
- x 485 single cylinder deadlock
- x thumbturn
- x 2¾" backset
- x strike box
- x US26D

1 Entrance Lockset; 10G05
- x L - lever
- x 2 3/4" backset
- x ANSI strike
- x strike box

1 Closer; #4040 XP Series
- x adjustable delayed action cylinder
- x parallel arm (push side) mounting
- x extra duty arm
- x ADA compliant
- x standard powder coat - aluminum

1 Wall Stop; #407½
- x US26D

1 Kick Down Holder; FS452-4 (Door 108A only)
- x 4"
- x US26D

1 Threshold; 276
- x 7" wide
- x length as required
- x ADA
- x mill finish aluminum

1 Weatherstripping; 29310_P
- x head and jambs
- x pile insert
- x clear anodized finish

1 Door shoe; 223_NB
- x pile insert
- x mill finish aluminum
- x length as required

autotroph
architecture.planning.sustainable design consulting
617 B Paulin St. Santa Fe, NM 87505

1 Door Protection Plates; Series 8400
x B4E - Bevel 4 edges
x CS – Counter sink holes
x 12″ high x width as required
x push side mounted
x US32D

Set V4: Exterior Office 102A, Mechanical 112A

3 Hinges; F179
x 4½″ x 4½″
x US26D

1 Deadbolt; 480 series
x 485 single cylinder deadlock
x thumbturn
x 2¾″ backset
x strike box
x US26D

1 Entrance Lockset; 10G05
x L - lever
x 2 3/4″ backset
x ANSI strike
x strike box

1 Wall Stop; #407½
x US26D

1 Threshold; 276
x 7″ wide
x length as required
x ADA
x mill finish aluminum

1 Weatherstripping; 29310_P
x head and jambs
x pile insert
x clear anodized finish

1 Door shoe; 223_NB
x pile insert
x mill finish aluminum
x length as required

autotroph
architecture.planning.sustainable design consulting
617 B Paulin St. Santa Fe, NM 87505

Set V5 – Office 2 102B

3 Hinges; F179
x 4½" x 4½"
x US26D

1 Keyed Entry Lockset; 756KNL
x Kingston lever
x 2 3/4" backset
x ANSI strike
x strike box
x UL listed
x US26D

1 Wall Stop; #407½
x US26D

1 Mail Slot; #620
x US26D

3 Silencers; #20 (Gray)

Set V6 – Office 1 101A, Janitor 105A, Crafts 111A, Closet 113A

3 Hinges; F179
x 4½" x 4½"
x US26D

1 Keyed Entry Lockset; 756KNL
x Kingston lever
x 2 3/4" backset
x ANSI strike
x strike box
x UL listed
x US26D

1 Wall Stop; #407
x US26D

3 Silencers; #20 (Gray)

autotroph
architecture.planning.sustainable design consulting
617 B Paulin St. Santa Fe, NM 87505

Set V7 – Woman 107A, Men 106A

3 Hinges; FBB179
x 4½" x 4½"
x US26D

1 Closer; 4040XP Series (no closer on existing?)
x hinge (pull) side mounting
x ADA
x ALUM

1 Pull Plate; 8303 Series
x 1" diameter
x 10" centers
x 6x16" plate
x type F mount
x US26D

1 Pull Plate; 8300 Series
x 6x16" plate
x US26D

1 Wall Stop; #407
x US26D

1 Door Protection Plates; Series 8400
x B4E - Bevel 4 edges
x CS – Counter sink holes
x 12" high x width as required
x push side mounted
x US32D

3 Silencers; #20 (Gray)

END OF SECTION 087100

PART 1 - GENERAL

RELATED DOCUMENTS

Drawings and general provisions of the Contract, including General and Supplementary Conditions and Division 1 Specification Sections, apply to this Section.

SUMMARY

This Section includes the following types of automatic door operators:

Exterior, automatic door operators, low energy, with visible mounting.

Automatic door operators shall be configured for doors as follows:

Single exterior doors, out swing.

REFERENCES

General: Standards listed by reference, including revisions by issuing authority, form a part of this specification section to extent indicated. Standards listed are identified by issuing authority, authority abbreviation, designation number, title or other designation established by issuing authority. Standards subsequently referenced herein are referred to by issuing authority abbreviation and standard designation.

Underwriters Laboratories (UL):

UL 325 – Standard for Door, Drapery, Gate, Louver, and Window Operators and Systems.

American National Standards Institute (ANSI)/Builders' Hardware Manufacturers Association (BHMA):

ANSI/BHMA A156.10: Standard for Power Operated Pedestrian Doors.

ANSI/BHMA A156.19: Standard for Power Assist and Low Energy Power Operated Doors.

American Society for Testing and Materials (ASTM):

ASTM B221 - Standard Specification for Aluminum and Aluminum-Alloy Extruded Bars, Rods, Wire, Profiles, and Tubes.

ASTM B209 - Standard Specification for Aluminum and Aluminum-Alloy Sheet and Plate

Builders' Hardware Manufacturers Association (BHMA):

BHMA A156.10 - Standard for Power Operated Pedestrian Doors.

American Association of Automatic Door Manufacturers (AAADM):

National Fire Protection Association (NFPA):

NFPA 70 – National Electric Code.

National Association of Architectural Metal Manufacturers (NAAMM):

Metal Finishes Manual for Architectural and Metal Products.

2009 New Mexico Commercial Building Code

American Architectural Manufacturers Association (AAMA):

AAMA 611 Voluntary Specification for Anodized Architectural Aluminum.

DEFINITIONS

Activation Device: Device that, when actuated, sends an electrical signal to the door operator to open the door.

PERFORMANCE REQUIREMENTS

Provide automatic door operators capable of withstanding structural loads and thermal movements based on testing manufacturer's standard units in assemblies similar to those indicated for this Project.

Operating Range: Minus 30 deg F (29 deg C) to 130 deg F (54 deg C).

Opening-Force Requirements for Egress Doors: In the event power failure to the operator, swinging automatic entrance doors shall open with a manual force, not to exceed 30 lbf (133 N) applied at 1″ (25 mm) form the latch edge of the door.

Break Away Requirements: Automatic door operators shall breakaway with no more than 50 lbf (222 N) applied at 1″ (25 mm) from the latch edge of the door.

Door Energy: The kinetic energy of a door in motion shall not exceed 1.25 lbd-ft (1.69 Nm).

Closing Time:

Doors shall be field adjusted to close from 90 degrees to 10 degrees in 3 seconds or longer.

Doors shall be field adjusted to close from 10 degrees to fully closed in not less than 1.5 seconds.

SUBMITTALS

Submit listed submittals in accordance with Conditions of the Contract and Division 01 submittal procedures.

Shop Drawings: Include plans, elevations, sections, details, hardware mounting heights, and attachments to other work. Indicate wiring for electrical supply.

Color Samples for selection of factory-applied color finishes.

Closeout Submittals: Provide the following with project close-out documents.

Owner's Manual.
Warranties.

QUALITY ASSURANCE

Installer Qualifications: Manufacturer's authorized representative who is trained for installation and maintenance of units required for this Project.

Manufacturer Qualifications: A qualified manufacturer with a manufacturing facility certified under ISO 9001 and with company certificate issued by AAADM.

Certifications: Automatic door operators shall be certified by the manufacturer to meet performance design criteria in accordance with the following standards:

ANSI A156.10.
NFPA 101.
UL 325 Listed (Fire Door Operator)

Source Limitations: Obtain automatic door operators through one source from a single manufacturer.

Product Options: Drawings indicate sizes, profiles, and dimensional requirements of automatic entrance door assemblies and are based on the specific system indicated. Refer to Division 1 Section "Product Requirements."

Power Operated Door Standard: ANSI/BHMA A156.19.

Electrical Components, Devices, and Accessories: Listed and labeled as defined in NFPA 70, Article 100, by a testing agency acceptable to authorities having jurisdiction, and marked for intended use.

Emergency-Exit Door Requirements: Comply with requirements of authorities having jurisdiction for swinging automatic entrance doors serving as a required means of egress.

PROJECT CONDITIONS

Field Measurements: General Contractor shall verify openings to receive automatic door operators by field measurements before fabrication and indicate measurements on Shop Drawings. Mounting Surfaces: General Contractor shall verify all surfaces to be plumb, straight and secure; substrates to be of proper dimension and material.

Other trades: General Contractor advise of any inadequate conditions or equipment.

COORDINATION

Templates: Check Shop Drawings of other work to confirm that adequate provisions are made for locating and installing automatic door operators to comply with indicated requirements.

Electrical System Roughing-in: Coordinate layout and installation of automatic door operators with connections to, power supplies, and remote activation devices.

System Integration: Integrate automatic door operators with other systems as required for a complete working installation.

Where required for proper operation, provide a time delay relay to signal automatic door operator to activate only after electric lock system is released.

WARRANTY

Automatic door operators shall be free of defects in material and workmanship for a period of one (1) year from the date of substantial completion.

During the warranty period the Owner shall engage a factory-trained technician to perform service and affect repairs. A safety inspection shall be performed after each adjustment or repair and a completed inspection form shall be submitted to the Owner.

During the warranty period all warranty work, including but not limited to emergency service, shall be performed during normal working hours.

PART 2 - PRODUCTS

AUTOMATIC DOOR OPERATORS

Manufacturer: Stanley Access Technologies; Magic-Force™ Series automatic door operator.

MATERIALS

Aluminum: Alloy and temper recommended by manufacturer for type of use and finish indicated.

Headers: 6063-T6.
Extruded Bars, Rods, Profiles, and Tubes: ASTM B 221.
Sheet and Plate: ASTM B 209.

COMPONENTS

Header Case: Header case shall not exceed 6" (152 mm) square in section and shall be fabricated from extruded aluminum with structurally integrated end caps, designed to conceal door operators and controls. The operator shall be sealed against dust, dirt, and corrosion within the header case. Access to the operator and electronic control box shall be provided by a full-length removable cover, edge rabbetted to the header to ensure a flush fit. Removable cover shall be secured to prevent unauthorized access.

Door Arms: A combination of door arms and linkage shall provide positive control of door through entire swing; units shall permit use of butt hung, center pivot, and offset pivot-hung doors.

Fasteners and Accessories: Manufacturer's standard corrosion-resistant, non-staining, non-bleeding fasteners and accessories compatible with adjacent materials.

Signage: Provide signage in accordance with ANSI/BHMA A156.19.

SWINGING DOOR OPERATORS

Provide door operators of size recommended by manufacturer for door size, weight, and movement; for condition of exposure; and for long-term, maintenance-free operation under normal traffic load for type of occupancy indicated.

Electromechanical Operators: Self-contained unit powered by a minimum 3/16 horsepower, permanent-magnet DC motor; through a high torque reduction gear system.

Operation: Power opening and spring closing.
Operator Type: Low energy; readily convertible to full energy; no tools required to change type.
Handing: Non-handed; no tools required to change handing.
Capacity: Rated for door panels weighing up to 350 pounds.
Mounting: Visible

Features:

Adjustable opening and closing speeds.
Adjustable opening and closing force.
Adjustable back-check.
Adjustable hold-open time between 0 and 30 seconds.
Reverse on obstruction.
Variable rate open/closed speed control.

Closed loop speed control with active braking and acceleration.
Variable obstruction recycle time delay.
Optional Switch to open/Switch to close operation.

Field Adjustable Spring Closing Operation: The operator shall close the door by spring energy employing the motor, as a dynamic brake to provide closing speed control. The closing spring shall be a helical compression spring, adjustable for positive closing action. The spring shall be adjustable, without removing the operator from the header, to accommodate a wide range of field conditions.

Independent Adjustable Closing and Latching Speed Control: The operator shall employ a rheostat module to allow for independent field adjustment of closing and latching speeds using the motor as a dynamic brake.

Field Adjustable Open Stop: The operator shall provide a field adjustable open stop to accommodate opening angles from 80 to 135 degrees without the need for additional components.

Consistent Cycle: The operator shall deliver an even, consistent open force across the entire transition from door fully closed to door fully open. Additionally, the range of the force shall be field adjustable to accommodate a wide range of on-site conditions.

Quiet Performance: The operator shall be designed to output audible noise ratios less than or equal to 50dba.

Manual Use: The operator shall function as a manual door closer in the direction of swing with or without electrical power. The operator shall deliver an even, consistent open force across the entire transition from door fully closed to door fully open.

ELECTRICAL CONTROLS

Electrical Control System: Electrical control system shall include a microprocessor controller and position encoder. The encoder shall monitor revolutions of the operator shaft and send signals to microprocessor controller to define door position. Systems utilizing external magnets and magnetic switches are not acceptable.

Life Cycle Data Counter: The microprocessor control shall incorporate a non-re-settable counter to track door operation cycles.

Controller Protection: The microprocessor controller shall incorporate the following features to ensure trouble free operation:

Automatic Reset Upon Power Up.
Main Fuse Protection.
Electronic Surge Protection.
Internal Power Supply Protection.
Resetable sensor supply fuse protection.
Software "Watchdog" protection in the case of software malfunction.

Push Button Interface with LED: The controller shall have push button switches with LED readout to allow for selection or change of the following parameters: carpet or timer logic, single or dual door, activation options, normal back check or large back check, push-to-open assist on/off.

Soft Start/Stop: A "soft-start" "soft-stop" motor driving circuit shall be provided for smooth normal opening and recycling.

Safety Search Circuitry: Provide system to recycle the swinging panels when an obstruction is encountered during the closing cycle. If an obstruction is detected, the system shall search for that object on the next closing cycle by reducing door closing speed prior to the previously encountered obstruction location, and will continue to close in check speed until doors are fully closed, at which time the doors will reset to normal speed. If obstruction is encountered again, the door will come to a full stop. The doors shall remain stopped until obstruction is removed and operate signal is given, resetting the door to normal operation.

Programmable Controller: Microprocessor controller shall be programmable and shall be designed for connection to a local configuration tool. Local configuration tool shall be software driven and shall be utilized via Palm® handheld interface. The following parameters may be adjusted via the configuration tool.

Operating speeds and forces as required to meet ANSI/BHMA A156.10.

Adjustable and variable features as specified in 2.04, B., 6.

Firmware update.

Trouble Shooting

I/O Status.
Electrical component monitoring including parameter summary.

Entrance profile copy/paste.

Software for local configuration tool shall be available as a free download from the automatic door operators manufacturer's internet site.

Emergency Breakout Switch: A cam actuated emergency breakout switch shall be provided to disconnect power to the motor when an in-swinging door is manually pushed in the emergency out direction. The operator will then automatically reset and power will be resumed.

Control Switch: Automatic door operators shall be equipped with a three position function switch to control the operation of the door. Control switch shall provide three modes of operation, Automatic, Off, and Hold-Open.

Power Switch: Automatic door operators shall be equipped with a two position On/Off switch to control power to the door.

ACTIVATION DEVICES

Activation for Low Energy Doors:

Push Plates: Where indicated provide 4½ inch (114 mm) square SPDT push plates with UL listed switch. Face plates and mounting studs shall be stainless steel. Face plates shall be engraved with the international symbol for accessibility and "Push To Open".

Provide manufacturers wireless radio-controlled push-plate unit for installation on existing walls.

Configure operator for activation when door is operated manually (Stanley "Magic-Touch").

ALUMINUM FINISHES

Comply with NAAMM Metal Finishes Manual for Architectural and Metal Products for recommendations for applying and designing finishes. Finish designations prefixed by AA comply with system established by Aluminum Association for designing finishes.

Class II, Color Anodic Finish: AA-M12C22A32/A34 (Mechanical Finish: nonspecular as fabricated; Chemical Finish: etched, medium matte; Anodic Coating: Architectural Class II, integrally colored or electrolytically deposited color coating 0.010 mm or thicker) complying with AAMA 611.

Color: Clear.

Applicator must be fully compliant with all applicable environmental regulations and permits, including wastewater and heavy metal discharge.

PART 3 - EXECUTION

INSPECTION

Examine conditions, with Installer present, for compliance with requirements for installation tolerances, header support, and other conditions affecting performance of swinging automatic entrance doors. Proceed with installation only after unsatisfactory conditions have been corrected.

INSTALLATION

Do not install damaged components. Fit joints to produce hairline joints free of burrs and distortion. Rigidly secure non-movement joints.

Mounting: Install automatic door operators/headers plumb and true in alignment with established lines and grades. Anchor securely in place.

Install surface-mounted hardware using concealed fasteners to greatest extent possible.

Set headers, arms and linkages level and true to location with anchorage for permanent support.

FIELD QUALITY CONTROL

Testing Services: Factory Trained Installer shall test and inspect each swinging automatic entrance door to determine compliance of installed systems with applicable ANSI standards.

ADJUSTING

Adjust door operators, controls, and hardware for smooth and safe operation, for weather-tight closure, and complying with requirements in ANSI/BHMA A156.19 by AAADM Certified Technician.

CLEANING AND PROTECTION

Clean surfaces promptly after installation. Remove excess sealant compounds, dirt, and other substances. Repair damaged finish to match original finish.

END OF SECTION 087113

THIS PAGE INTENTIONALLY BLANK

SECTION 090000 - FINISH SCHEDULE

SENIOR CENTER IMPROVEMENTS

SANTA FE NEW MEXICO

No.	Location	Floor		Base		Walls								Paint	Ceilings		Paint	Remarks
						North		East		South		West						
		Material	Color	Material	Finish	Material	Finish	Material	Finish	Material	Finish	Material	Finish	Luster	Material	Finish	Luster	
	LUISA SENIOR CENTER																	
101	Mechanical			*N O*		*F I N I S H*					*W O R K*							
102	Laundry			*N O*		*F I N I S H*					*W O R K*							
103	Janitor			*N O*		*F I N I S H*					*W O R K*							
104	Women	Ceramic Tile[1]		Ceramic Base[1]		CT[1]/GWB	Mfr/Paint	X-GWB	Paint	X-GWB	Paint	CT[1]/GWB	Mfr/Paint	Eggshell	Acoustic Tile	Mfr	-	
105	Men	Ceramic Tile[1]		Ceramic Base[1]		CT[1]/GWB	Mfr/Paint	CT[1]/GWB	Mfr/Paint	X-GWB	Paint	X-GWB	Paint	Eggshell	Acoustic Tile	Mfr	-	
106	Hall	Existing		Existing		X-GWB	Paint	-	-	X-GWB	Paint	-	-	Eggshell	Acoustic Tile	Mfr	-	
107	Kitchen			*N O*		*F I N I S H*					*W O R K*							
108	Hall	Existing		Existing		X-GWB	Paint	X-GWB	Paint	X-GWB	Paint	X-GWB	Paint	Eggshell	Acoustic Tile	Mfr	-	
109	Storage	Existing		Existing		X-GWB	Paint	X-GWB	Paint	X-GWB	Paint	X-GWB	Paint	Eggshell	Acoustic Tile	Mfr	-	
110	Multipupose Rm	Existing		Existing		X-GWB	Paint	X-GWB	Paint	X-GWB	Paint	X-GWB	Paint	Eggshell	Acoustic Tile	Mfr	-	
111	Mechanical	X-Concrete				X-GWB	Paint	X-GWB	Paint	X-GWB	Paint	X-GWB	Paint	Eggshell	X-GWB	Paint	Flat	
112	Closet	Existing		Existing		X-GWB	Paint	X-GWB	Paint	X-GWB	Paint	X-GWB	Paint	Eggshell	X-GWB	Paint	Flat	Paint wood shelving
113	Mechanical	X-Concrete				X-GWB	Paint	X-GWB	Paint	X-GWB	Paint	X-GWB	Paint	Eggshell	X-GWB	Paint	Flat	
114	Foyer	Existing		Existing		X-GWB	Paint	X-GWB	Paint	X-GWB	Paint	X-GWB	Paint	Eggshell	X-GWB	Paint	Flat	
115	Office 2	Existing		Existing		X-GWB	Paint	X-GWB	Paint	X-GWB	Paint	X-GWB	Paint	Eggshell	X-GWB	Paint	Flat	
116	Office 1	Existing		Existing		X-GWB	Paint	X-GWB	Paint	X-GWB	Paint	X-GWB	Paint	Eggshell	X-GWB	Paint	Flat	
117	Computer Rm	Polished Conc.	Gray	1x3 Wood	Paint	GWB	Paint	GWB	Paint	GWB	Paint	GWB	Paint	Eggshell	Acoustic Tile	Mfr	-	
116	Instruction Rm	Polished Conc.	Gray	1x3 Wood	Paint	GWB	Paint	GWB	Paint	GWB	Paint	GWB	Paint	Eggshell	Acoustic Tile	Mfr	-	

[1] Ceramic tile and ceramic base work is per Alternate L1

X = Existing

CT = Ceramic Tile

For the purposes of the Finish Schedule at Luisa; North is to the left of the plan sheet, East is at the bottom, South is to the left and West is at the top

No.	Location	Floor		Base		Walls								Paint	Ceilings		Paint	Remarks
						North		East		South		West						
		Material	Color	Material	Finish	Material	Finish	Material	Finish	Material	Finish	Material	Finish	Luster	Material	Finish	Luster	
	PASATIEMPO SENIOR CENTER																	
101	Kitchen	X-CT	-	X-CT	-	Skim Coat	Paint[2]	Skim Coat	Paint[2]	Skim Coat	Paint[2]	Skim Coat	Paint[2]	Semi-Glass	Acoustic Tile	Mfr	-	
102	Storage	X-CT	-	X-CT	-	X-CMU	Paint[2]	X-CMU	Paint[2]	X-CMU	Paint[2]	X-CMU	Paint[2]	Semi-Glass	X-Mtl Deck	Paint	Semi-Gloss	
		For the purposes of the Finish Schedule at Pasatiempo; North is at the top of the plan sheet, East is to the right, South is the bottom and West is to the left																
		[2] All finish painting is per Alternate P1																
	VILLA CONSUELO SENIOR CENTER																	
101	Office 1			*N O*		*F I N I S H*					*W O R K*							
102	Office 2			*N O*		*F I N I S H*					*W O R K*							
103	Lobby	Ceramic Tile[5]		Ceramic Base[5]		X-GWB	Paint	X-GWB	Paint	-	-	X-GWB	Paint	Eggshell	Acoustic Tile	Mfr	-	
104	Hall	Ceramic Tile[5]		Ceramic Base[5]		X-GWB	Paint	-	-	X-GWB	Paint	X-GWB	Paint	Eggshell	Acoustic Tile	Mfr	-	
105	Janitor	X- Util Sink				X-CT	-	X-CT	-	X-CT	-	X-CT	-	Semi-Glass	X-GWB	Paint	Flat	
106	Men	Ceramic Tile[3]		Ceramic Base[3]		X-GWB	Paint	X-GWB	Paint	CT[3]/GWB	Mfr/Paint	CT[3]/GWB	Mfr/Paint	Eggshell	Acoustic Tile	Mfr	-	
107	Women	Ceramic Tile[3]		Ceramic Base[3]		X-GWB	Paint	CT[3]/GWB	Mfr/Paint	CT[3]/GWB	Mfr/Paint	X-GWB	Paint	Eggshell	Acoustic Tile	Mfr	-	
108	Mail	Ceramic Tile[5]		Ceramic Base[5]		X-GWB	Paint	X-GWB	Paint	X-GWB	Paint	X-GWB	Paint	Eggshell	Acoustic Tile	Mfr	-	
109	Community Rm	Ceramic Tile[4]		Ceramic Base[4]		X-GWB	Paint	X-GWB	Paint	X-GWB	Paint	X-GWB	Paint	Eggshell	Acoustic Tile	Mfr	-	
110	Laundry			*N O*		*F I N I S H*					*W O R K*							
111	Crafts	Ceramic Tile[6]		Ceramic Base[6]		X-GWB	Paint	X-GWB	Paint	X-GWB	Paint	X-GWB	Paint	Eggshell	Acoustic Tile	Mfr	-	
112	Mechanical			*N O*		*F I N I S H*					*W O R K*							
113	Closet	Ceramic Tile[6]		Ceramic Base[6]		X-GWB	Paint	X-GWB	Paint	X-GWB	Paint	X-GWB	Paint	Eggshell	Acoustic Tile	Mfr	-	Paint wood shelving
		[3] Ceramic tile and ceramic base work is per Alternate V1																
		[4] Ceramic tile and ceramic base work is per Alternate V2																
		[5] Ceramic tile and ceramic base work is per Alternate V3																
		[6] Ceramic tile and ceramic base work is per Alternate V4																
		X = Existing																
		CT = Ceramic Tile																
		For the purposes of the Finish Schedule at Villa Consuelo; North is at the top of the plan sheet, East is to the right, South is the bottom and West is to the left																

PART 1 - GENERAL

RELATED DOCUMENTS

Drawings and general provisions of the Contract, including General and Supplementary Conditions and Division 1 Specification Sections, apply to this Section.

SUMMARY

This Section includes the following:

On new construction: Supply and installation of fiber reinforced, one-coat stucco assembly over continuous insulation and a fiberglass mesh embedded into the brown coat for crack resistance with an acrylic based elastomeric finish coat

Related Sections include the following:

Division 7 Section "Joint Sealants" for sealants installed with exterior portland cement plaster (stucco).

REFERENCES

ASTM C144 - Standard Specification for Aggregate for Masonry Mortar

ASTM C578 - Specification for Preformed, Cellular Polystyrene Thermal Insulation

ASTM C847 - Standard Specification for Metal Lath

ASTM C897 - Standard Specification for Aggregate for Job-Mixed portland Cement-Based Plaster

ASTM C926 - Standard Specification for Application of portland Cement-Based Plaster

ASTM C933 - Standard Specification for Welded Wire Lath

ASTM C1032 - Standard Specification for Woven Wire Plaster Base

ASTM C1063 - Standard Specification for Installation of Lathing and Furring for portland Cement Based Plaster

ASTM E84 - Test Method for Surface Burning Characteristics of Building Materials

UUB 790A - Specification for Building Paper

ASSEMBLY DESCRIPTION

One-Coat Stucco Assembly with a water-resistive barrier, continuous insulation, wire fabric or metal lath, pre-mixed stucco base coat, fiberglass reinforcing mesh embedded in stucco brown coat, and an acrylic based finish coat.

SUBMITTALS

General: Submit samples, water resistive barrier coating Evaluation Reports and manufacturer's product data sheets in accordance with Division 1 General Requirements Submittal Section.

Samples: Submit samples for approval. Samples shall be of materials specified and of suitable size as required to accurately represent each color and texture used on project. Prepare each sample using same

tools and techniques for actual project application. Maintain and make available, at job site, approved samples.

Manufacturer's Warranty: Submit sample copies of Manufacturer's Warranty indicating Single Source Responsibility for Water Resistive Barrier coating, Stucco Base coat,finish coat and optional Primer, level coat and reinforcing mesh as specified.

QUALITY ASSURANCE

Qualifications:

Manufacturer: Shall have marketed stucco assemblies in United States for at least ten years and shall have completed projects of same general scope and complexity.

Applicator: Shall be experienced and competent in installation of stucco materials and liquid-applied membranes, and shall provide evidence of a minimum of five years experience in work similar to that required by this section.

Stucco Assembly Functional Criteria:

General: Stucco application shall be to vertical substrates or to substrates sloped for positive drainage. Substrates sloped for drainage shall have additional protection from weather exposure that might be harmful to coating performance.

Testing to meet International Code Council Acceptance Criteria AC11.

Performance Requirements of Stucco Assembly

Test	Method	ICC AC 11 Criteria	Results
Accelerated Weathering	ASTM G153	2000 Hours	No deleterious effect
Freeze-Thaw Resistance	ICC AC 11	10 cycles	Pass
Transverse Wind Load Resistance	ASTM E330	Meet Design Loads	Refer to ICC-ES ESR-2564
Fire Resistance	ASTM E119	One hour fire	Refer to ICC-ES ESR-2564
Drainage	ICC AC 11	90 %	Refer to ICC-ES ESR-2564

Performance Requirements of Coatings applied to Expanded polystyrene features: Must comply with ASTM E 2568 or ICC Acceptance Criteria AC 219 for EIFS.

Substrate Conditions:

Substrate materials and construction shall conform to the building code having jurisdiction.

Substrates shall be sound, dry and free of dust, dirt, laitance, efflorescence and other harmful contaminants.

Substrate Dimensional Tolerances: Flat with 1/4 in (6.4 mm) within any 10 ft (3 m) radius.

Maximum deflection of substrate system under positive or negative design loads shall not exceed L/360 of span.

Expansion and Control Joints: Continuous expansion and control joints shall be installed at locations in accordance with ASTM C1063 and ASTM C926.

Substrate movement, and expansion and contraction of Stucco Assembly and adjacent materials shall be taken into account in design of expansion joints, with proper consideration given to sealant properties, installation conditions, temperature range, coefficients of expansion of materials, joint width to depth ratios, and other material factors. Minimum width of expansion joints shall be as specified by the designer or shown on the project drawings.

In accordance with ASTM C1063, expansion or control joints shall be installed in walls not more than 144 ft^2 (13.4 m^2) in area, and not more than 100 ft^2 (9.3 m^2) in area for all non-vertical applications. The distance between joints shall not exceed 18 ft (5.5 m) in either direction or a length-to-width ratio of 2-1/2 to 1.

For direct application to concrete or masonry, stucco joints are required only at control/expansion joints in the underlaying concrete or masonry.

DELIVERY, STORAGE, AND HANDLING

Delivery: Deliver Stucco Assembly products in original packaging with manufacturer's identification.

Storage: Store Stucco Assembly products in a dry location, out of direct sunlight, off the ground, and protected from moisture.

SITE / ENVIRONMENTAL CONDITIONS

Substrate Temperature: Do not apply stucco assembly products to substrates whose temperature are below 40°F (4°C) or contain frost or ice.

Inclement Weather: Do not apply stucco base during inclement weather, unless appropriate protection is employed.

Sunlight Exposure: Avoid, when possible, installation of the stucco assembly in direct sunlight. Application of finishes in direct sunlight in hot weather may adversely affect aesthetics.

Do not apply stucco base coats or finishes if ambient temperature falls below 40°F (4°C) within 24 hours of application. Protect stucco from uneven and excessive evaporation during dry weather and strong blasts of dry air.

Prior to installation, the wall shall be inspected for surface contamination, or other conditions that may adversely affect the performance of the stucco assembly and shall be free of residual moisture.

COORDINATION AND SCHEDULING:

Coordination: Coordinate stucco assembly installation with other construction operations.

WARRANTY

Warranty: Upon request, at completion of installation, provide manufacturer's Standard Limited Stucco Warranty

PRODUCTS

MANUFACTURERS

Manufacturer, Basis of Design: brands of Parex USA, Inc., including Parex, El Rey Stucco, Lahabra Stucco or TEIFS, 4125 E. La Palma Ave., Suite 250, Anaheim, CA 92807 Contact: Architectural Sales, Andy Townes at (866.516.0061) or andy.townes@parexusa.com or Technical Support (800.226.2424).

Components: Obtain components of brands of Parex USA Stucco Assemblies from authorized distributors. No substitutions or additions of other materials are permitted without prior written permission from Parex USA for this project.

MATERIALS

Stucco Base Coat (3/8 in – 1/2 in)

Fastwall™ Concentrate: Proprietary mixture of Portland cement and proprietary ingredients mixed with clean, cool, potable water, and ASTM C897 or ASTM C144 sand added in the field.

Reinforcing Meshes: For embedment into wet brown coat

Krak-Master Stucco Mesh Mesh: Weight 4.5 oz. per sq. yd (153 g/m2) reinforcing mesh. Typically green in color

Finish:

Perma-Flex Elastomeric Finish™: Factory blended, 100% acrylic Elastomeric polymer based finish, integrally colored. Finish texture and color as selected by Project Designer.

RELATED MATERIALS AND ACCESSORIES

General: Stucco assembly and its related materials shall conform to the requirements of ICC-ES Evaluation Report No. 2564 and shall conform to this specification.

Substrate Materials:

Plywood: Minimum 5/16 in (8 mm) thick exterior grade or Exposure I plywood for studs spaced 16 in (406 mm) o.c. and 3/8 in (9 mm) thick exterior type plywood minimum for studs spaced 24 in (610 mm) o.c. Plywood shall comply be exterior grade or Exposure 1 and comply with DOC PS-1. See structural drawings for additional requirements.

Other as approved by stucco manufacturer in writing prior to the project.

Water-Resistive Barriers: Plywood Sheathing

Dupont Tyvek Stuccowrap

Lath and Accessories: Conform to ASTM C847, ASTM C933, ASTM C1032, ASTM C1063 and Appendix

Accessories: Manufacturer's standard steel products with minimum G60 galvanizing. Includes plaster stops, control joints, weep screeds, corner beads, etc…

Metal Plaster Bases: 20 Gauge self furred stucco netting or a Minimum 2.5 lb/yd2 (1.4 kg/m2) or 3.4 lb/yd2 (1.8 kg/m2) expanded metal diamond lath, or welded wire lath in accordance with applicable codes and standards.

Weep Screeds: Foundation weep screed with minimum 3-1/2 inch vertical attachment flange.

Continuous Rigid Insulation:

Extruded-Polystyrene Board Insulation: ASTM C 578, of type and density indicated below, with maximum flame-spread and smoke-developed indexes of 75 and 450, respectively:

Produced and labeled under a third party quality program as required by applicable building code; and produced by a manufacturer approved by Parex USA.

Thickness as indicated on drawings.

Seals, Sealants and Bond Breakers: Sealants shall conform to ASTM C920, Grade NS, Class 25, Use NT. Backer rod shall be closed-cell polyethylene foam.

Exposed Aluminum Flashing:

PART 2 - EXECUTION

EXAMINATION

Compliance: Comply with manufacturer's instructions for installation of the stucco assembly.

Substrate Examination: Examine prior to stucco base installation as follows:

Substrate shall be of a type approved by stucco manufacturer. Plywood substrates shall be gapped 1/8 in (3.2 mm) at all edges.

Substrate shall be examined for soundness, and other harmful conditions.

Substrate shall be free of dust, dirt, laitance, efflorescence, and other harmful contaminants.

Substrate construction in accordance with substrate material manufacturer's specifications and applicable building codes.

Ensure that all flashings have been installed.

Advise Contractor of discrepancies preventing proper installation of the stucco assembly. Do not proceed with the stucco assembly work until unsatisfactory conditions are corrected.

PREPARATION

New Construction: or areas of in-fill

Weather Barriers and Wire Fabric Lath and Metal Lath: Install according to ICC Evaluation Report ESR 2564, ASTM C1063 and Appendix and the Building Code.

Concrete (Cast-in-Place): Provide a surface that is slightly scarified, water absorbent, straight and true to line and plane. Remove form ties and trim projecting concrete so it is even with the plane of the wall. Remove form release agents. Pre-moisten the surface with water just prior to placement of stucco, or apply one uniform coat of acrylic emulsion additive according to application instructions.

MIXING

Mix proprietary products in accordance with manufacturer's instructions and applicable Product Data Sheets.

APPLICATION

General: Stucco assembly and its related materials shall conform to the requirements of ICC-ES Evaluation Report No. 2564 and shall conform to this specification.

Water Resistive Barrier:

Install the approved sheet good material over all sheathing substrates.

The material must be a code approved, water vapor permeable water resistive barrier.

When installing insulation board behind the stucco assembly, the intervening material must be Dupont Tyvek Stuccowrap, DrainWrap, CommericalWrap D, other sheet good water resistive barrier, incorporating in itself a means of drainage, and maintaining a current ICC Evaluation Report

Flash all rough openings with Flashing Membrane or reinforced fluid applied barrier..

Stucco Base:

Stucco Base shall be applied in one or two coats to a minimum thickness of 3/8 in (9.5 mm) by hand troweling or machine spraying the mixture to the wire lath in accordance with product data Sheets. The maximum thickness applied in one pass is 1/2 in (17 mm).

Rod surface to true plane and float to densify.

Trowel to smooth and uniform surface to receive acrylic polymer finish coat.

While brown coat is still wet, embed the fiberglass mesh into surface and smooth to flush taking care to remove all loose ends, wrinkles etc.. and over lapping ends a minimum of 2 inches

Finish:

Remove surface contaminants such as dust or dirt without damaging the substrate.

Ambient and surface temperature must be 40°F (4°C) or higher during application and drying time. Supplemental heat and protection from precipitation must be provided as needed.

Use only on surfaces that are sound, clean, dry, unpainted, and free from any residue that might affect the ability of the finish to bond to the surface.

Apply exterior wall finish coats according to manufacturer's product data sheets.

Protect finish coats from inclement weather until completely dry.

Curing

Stucco Base: Keep stucco moist for at least 48 hours (longer in dry weather) by lightly fogging walls. Start light fogging after initial set of 1–2 hours. Air cure an additional 3-5 days before application of finish coats

Air cure acrylic and elastomeric finish coats only. Do not wet cure.

CLEAN-UP

Remove and legally dispose of stucco assembly component debris material from job site.

PROTECTION

Provide protection of installed materials from water infiltration into or behind them.

Provide protection of installed stucco from dust, dirt, precipitation, and freezing during installation.

Provide protection of installed finish from dust, dirt, precipitation, freezing and continuous high humidity until fully cured and dry.

Clean exposed surfaces using materials and methods recommended by the manufacturer of the material or product being cleaned. Remove and replace work that cannot be cleaned to the satisfaction of the Project Designer/Owner.

END OF SECTION 092400

THIS PAGE INTENTIONALLY BLANK

PART 1 - GENERAL

RELATED DOCUMENTS

Drawings and general provisions of the Contract, including General and Supplementary Conditions and Division 1 Specification Sections, apply to this Section.

SUMMARY

This Section includes the following:

Interior gypsum wallboard.

Related Sections include the following:

Division 6 Section "Miscellaneous Carpentry" for wood framing and furring.

Division 7 Section "Building Insulation" for insulation and vapor retarders installed in gypsum board assemblies.

DEFINITIONS

Gypsum Board Terminology: Refer to ASTM C 11 for definitions of terms for gypsum board assemblies not defined in this Section or in other referenced standards.

SUBMITTALS

Product Data: For each type of product indicated.

DELIVERY, STORAGE, AND HANDLING

Deliver materials in original packages, containers, or bundles bearing brand name and identification of manufacturer or supplier.

Store materials inside under cover and keep them dry and protected against damage from weather, direct sunlight, surface contamination, corrosion, construction traffic, and other causes. Stack gypsum panels flat to prevent sagging.

PROJECT CONDITIONS

Environmental Limitations: Comply with ASTM C 840 requirements or gypsum board manufacturer's written recommendations, whichever are more stringent.

FIELD QUALITY CONTROL

In Wall Observation: Before Contractor installs gypsum board on walls, Architect will conduct an in wall observation and report deficiencies in the Work observed. Do not proceed with installation of gypsum board to wall framing until deficiencies have been corrected.

Notify Architect seven days in advance of date and time when Project, or part of Project, will be ready for above-ceiling observation.

PART 1 - PRODUCTS

MANUFACTURERS

Available Manufacturers: Subject to compliance with requirements, manufacturers offering products that may be incorporated into the Work include, but are not limited to, the following:

Gypsum Board and Related Products:

American Gypsum Co.
G-P Gypsum Corp.
National Gypsum Company.
United States Gypsum Co.

INTERIOR GYPSUM WALLBOARD

Panel Size: Provide in maximum lengths and widths available that will minimize joints in each area and correspond with support system indicated.

Gypsum Wallboard: ASTM C 36.

Regular Type:

Thickness: 5/8 inch, unless otherwise indicated.
Long Edges: Tapered and featured (rounded or beveled) for prefilling.
Location: Vertical surfaces.

TRIM ACCESSORIES

Interior Trim: ASTM C 1047.

Material: Galvanized or aluminum-coated steel sheet or rolled zinc.

Shapes:

Cornerbead: Use at outside corners.
LC-Bead: J-shaped; exposed long flange receives joint compound; use at exposed panel edges.

JOINT TREATMENT MATERIALS

General: Comply with ASTM C 475.

Joint Tape:

Interior Gypsum Wallboard: Paper.

Joint Compound for Interior Gypsum Wallboard: For each coat use formulation that is compatible with other compounds applied on previous or for successive coats.

Prefilling: At open joints, rounded or beveled panel edges, and damaged surface areas, use setting-type taping compound.

Embedding and First Coat: For embedding tape and first coat on joints, fasteners, and trim flanges, use setting-type taping compound.

Use setting-type compound for installing paper-faced metal trim accessories.

Fill Coat: For second coat, use drying-type, all-purpose compound.

autotroph
architecture.planning.sustainable design consulting
617 B Paulin St. Santa Fe, NM 87505

Finish Coat: For third coat, use drying-type, all-purpose compound.

AUXILIARY MATERIALS

General: Provide auxiliary materials that comply with referenced installation standards and manufacturer's written recommendations.

Laminating Adhesive: Adhesive or joint compound recommended for directly adhering gypsum panels to continuous substrate.

Use adhesives that have a VOC content of 50 g/L or less when calculated according to 40 CFR 59, Subpart D (EPA Method 24).

Steel Drill Screws: ASTM C 1002, unless otherwise indicated.

Use screws complying with ASTM C 954 for fastening panels to steel members from 0.033 to 0.112 inch (0.84 to 2.84 mm) thick.

Sound Attenuation Blankets: ASTM C 665, Type I (blankets without membrane facing) produced by combining thermosetting resins with mineral fibers manufactured from glass, slag wool, or rock wool. Provide optional Special "Green" Fiber content

Thickness: 3½ inch.

Thermal Insulation: As specified in Division 7 Section "Building Insulation."

PART 2 - EXECUTION

EXAMINATION

Examine areas and substrates, with Installer present, and including welded hollow-metal frames, cast-in anchors, and structural framing, for compliance with requirements and other conditions affecting performance. Proceed with installation only after unsatisfactory conditions have been corrected.

APPLYING AND FINISHING PANELS, GENERAL

Gypsum Board Application and Finishing Standards: ASTM C 840 and GA-216.

Install sound attenuation blankets before installing gypsum panels, unless blankets are readily installed after panels have been installed on one side.

Install gypsum panels with face side out. Butt panels together for a light contact at edges and ends with not more than 1/16 inch (1.5 mm) of open space between panels. Do not force into place.

Locate edge and end joints over supports, except in ceiling applications where intermediate supports or gypsum board back-blocking is provided behind end joints. Do not place tapered edges against cut edges or ends. Stagger vertical joints on opposite sides of partitions. Do not make joints other than control joints at corners of framed openings.

Attach gypsum panels to framing provided at openings and cutouts.

Do not attach gypsum panels across the flat grain of wide-dimension lumber, including floor joists and headers. Float gypsum panels over these members using resilient channels, or provide control joints to counteract wood shrinkage.

Space fasteners in gypsum panels according to referenced gypsum board application and finishing standard and manufacturer's written recommendations.

PANEL APPLICATION METHODS

Single-Layer Application:

On partitions/walls, apply gypsum panels to minimize end joints.

Stagger abutting end joints not less than one framing member in alternate courses of board.

At stairwells and other high walls, install panels horizontally, unless otherwise indicated or required by fire-resistance-rated assembly.

INSTALLING TRIM ACCESSORIES

General: For trim with back flanges intended for fasteners, attach to framing with same fasteners used for panels. Otherwise, attach trim according to manufacturer's written instructions.

FINISHING GYPSUM BOARD ASSEMBLIES

General: Treat gypsum board joints, interior angles, edge trim, control joints, penetrations, fastener heads, surface defects, and elsewhere as required to prepare gypsum board surfaces for decoration. Promptly remove residual joint compound from adjacent surfaces.

Prefill open joints, rounded or beveled edges, and damaged surface areas.

Apply joint tape over gypsum board joints, except those with trim having flanges not intended for tape.

Gypsum Board Finish Levels: Finish panels to levels indicated below, according to ASTM C 840, for locations indicated:

Level 1: Embed tape at joints in ceiling plenum areas, concealed areas, and where indicated, unless a higher level of finish is required for fire-resistance-rated assemblies and sound-rated assemblies.

Level 4: Embed tape and apply separate first, fill, and finish coats of joint compound to tape, fasteners, and trim flanges at panel surfaces that will be exposed to view, unless otherwise indicated.

END OF SECTION 092900

autotroph
architecture.planning.sustainable design consulting
617 B Paulin St. Santa Fe, NM 87505

PART 1 - GENERAL

RELATED DOCUMENTS

Drawings and general provisions of the Contract, including General and Supplementary Conditions and Division 1 Specification Sections, apply to this Section.

SUMMARY

This Section includes the following:

Ceramic tile.

Related Sections include the following:

Division 1 Section "Selective Demolition" for removing existing finishes.

Division 7 Section "Joint Sealants" for sealing of expansion, contraction, control, and isolation joints in tile surfaces.

DEFINITIONS

Module Size: Actual tile size (minor facial dimension as measured per ASTM C 499) plus joint width indicated.

Facial Dimension: Nominal tile size as defined in ANSI A137.1.

REFERENCES (UNDERLAYMENT)

ASTM C472 Compressive Strength

ASTM C33 Sand Aggregate

ASTM D4263 Standard test method for indicating moisture in concrete

ASTM F2419 Standard test method for installation of thick poured gypsum concrete and preparation of surface to receive resilient flooring

ASTM E492 Impact Insulation Class (IIC)

ASTM E90 Sound Transmission Class (STC)

PERFORMANCE REQUIREMENTS

Static Coefficient of Friction: For tile installed on walkway surfaces, provide products with the following values as determined by testing identical products per ASTM C 1028:

Level Surfaces: Minimum 0.6.

SUBMITTALS

Product Data: For each type of product indicated.

Samples for Initial Selection: For each type of tile and grout indicated. Include Samples of accessories involving color selection.

Samples for Verification:

Full-size units of each type and composition of tile and for each color and finish required.

QUALITY ASSURANCE

Source Limitations for Tile: Obtain all tile of same type and color or finish from one source or producer.

Obtain tile from same production run and of consistent quality in appearance and physical properties for each contiguous area.

Source Limitations for Setting and Grouting Materials: Obtain ingredients of a uniform quality for each mortar, adhesive, and grout component from a single manufacturer and each aggregate from one source or producer.

DELIVERY, STORAGE, AND HANDLING

Deliver and store packaged materials in original containers with seals unbroken and labels intact until time of use. Comply with requirement in ANSI A137.1 for labeling sealed tile packages.

Store tile and cementitious materials on elevated platforms, under cover, and in a dry location.

Store aggregates where grading and other required characteristics can be maintained and contamination avoided.

Store liquid latexes and emulsion adhesives in unopened containers and protected from freezing.

PROJECT CONDITIONS

Environmental Limitations: Do not install tile until construction in spaces is complete and ambient temperature and humidity conditions are maintained at the levels indicated in referenced standards and manufacturer's written instructions.

EXTRA MATERIALS

Furnish extra materials described below that match products installed and that are packaged with protective covering for storage and identified with labels describing contents.

Tile and Trim Units: Furnish quantity of full-size units equal to 3 percent of amount installed, for each type, composition, color, pattern, and size indicated.

PART 2 - PRODUCTS

MANUFACTURERS

In other Part 2 articles where titles below introduce lists, the following requirements apply for product selection:

Manufacturers: Subject to compliance with requirements, provide products by one of the manufacturers specified.

PRODUCTS, GENERAL

ANSI Ceramic Tile Standard: Provide tile that complies with ANSI A137.1, "Specifications for Ceramic Tile," for types, compositions, and other characteristics indicated.

Provide tile complying with Standard grade requirements, unless otherwise indicated.

For facial dimensions of tile, comply with requirements relating to tile sizes specified in Part 1 "Definitions" Article.

ANSI Standards for Tile Installation Materials: Provide materials complying with ANSI standards referenced in "Setting and Grouting Materials" Article.

Colors, Textures, and Patterns: Where manufacturer's standard products are indicated for tile, grout, and other products requiring selection of colors, surface textures, patterns, and other appearance characteristics, provide specific products or materials complying with the following requirements:

As selected by Architect from manufacturer's full range.

Factory Blending: For tile exhibiting color variations within ranges selected during Sample submittals, blend tile in factory and package so tile units taken from one package show same range in colors as those taken from other packages and match approved Samples.

TILE PRODUCTS

Available Products: Subject to compliance with requirements, products that may be incorporated into the Work include, but are not limited to:
Daltile; Div. of Dal-Tile International Inc; “Cliff Pointe”.
Daltile; Div. of Dal-Tile International Inc; “Terra Antica”.
American Marazzi Tile, Inc; “Walnut Canyon”.

Interior Color Body Porcelain Tile: Flat tile as follows:

Composition: Impervious color body porcelain.

Module Size: 12″ x 12″ nominal (Daltile). 13 x 13″ (Marazzi)

Nominal Thickness: 5/16 inch nominal.

Water Absorption (ASTM-C373): ≤0.50%

Breaking Strength (ASTM-C648): ≥275 lbs

Scratch Hardness (MOHS): 7.0

Chemical Resistance (ASTM-C650): Resistant

Static Coefficient of Friction: Wet/Dry (ASTM-C1028): ≥0.60/ ≥0.70

Dynamic Coefficient of Friction: Wet: ≥0.42

Abrasion Resistance (ASTM-C1027): 4

Architect to select up to three colors from manufacturer’s complete range.

SETTING AND GROUTING MATERIALS

Latex-Portland Cement Mortar (Thin Set): ANSI A118.4, consisting of the following:

Prepackaged dry-mortar mix containing dry, redispersible, ethylene vinyl acetate additive to which only water must be added at Project site.

Prepackaged dry-mortar mix combined with acrylic resin or styrene-butadiene-rubber liquid-latex additive.

Polymer-Modified Tile Grout: ANSI A118.7, color as indicated.

Polymer Type: Either ethylene vinyl acetate, in dry, redispersible form, prepackaged with other dry ingredients, or acrylic resin or styrene-butadiene rubber in liquid-latex form for addition to prepackaged dry-grout mix.

Sanded grout mixture for joints 1/8 inch (3.2 mm) and wider.

MISCELLANEOUS MATERIALS

Trowelable Underlayments and Patching Compounds: Latex-modified, portland cement-based formulation provided or approved by manufacturer of tile-setting materials for installations indicated.

Tile Cleaner: A neutral cleaner capable of removing soil and residue without harming tile and grout surfaces, specifically approved for materials and installations indicated by tile and grout manufacturers.

MIXING MORTARS AND GROUT

Mix mortars and grouts to comply with referenced standards and mortar and grout manufacturers' written instructions.

Add materials, water, and additives in accurate proportions.

Obtain and use type of mixing equipment, mixer speeds, mixing containers, mixing time, and other procedures to produce mortars and grouts of uniform quality with optimum performance characteristics for installations indicated.

PART 3 - EXECUTION

EXAMINATION

Examine substrates, areas, and conditions where tile will be installed, with Installer present, for compliance with requirements for installation tolerances and other conditions affecting performance of installed tile.

Concrete substrate shall be structurally sound and dry. Contractor shall clean subfloor to remove adhesives, soil, oil, grease, and other contaminating factors before arrival of the authorized applicator prior to installing tile.

Verify that substrates for setting tile are firm; dry; clean; free of oil, waxy films, and curing compounds; and within flatness tolerances required by referenced ANSI A108 Series of tile installation standards for installations indicated.

Verify that joints and cracks in tile substrates are coordinated with tile joint locations; if not coordinated, adjust joint locations in consultation with Architect.

Proceed with installation only after unsatisfactory conditions have been corrected.

PREPARATION

Remove coatings, including curing compounds and other substances that contain soap, wax, oil, or silicone, that are incompatible with tile-setting materials.

Provide concrete substrates for tile floors installed with thin-set mortar that comply with flatness tolerances specified in referenced ANSI A108 Series of tile installation standards.

Fill cracks, holes, and depressions with trowelable leveling and patching compound according to tile-setting material manufacturer's written instructions. Use product specifically recommended by tile-setting material manufacturer.

Remove protrusions, bumps, and ridges by sanding or grinding.

Blending: For tile exhibiting color variations within ranges selected during Sample submittals, verify that tile has been factory blended and packaged so tile units taken from one package show same range of colors as those taken from other packages and match approved Samples. If not factory blended, either return to manufacturer or blend tiles at Project site before installing.

INSTALLATION, GENERAL

ANSI Tile Installation Standards: Comply with parts of ANSI A108 Series "Specifications for Installation of Ceramic Tile" that apply to types of setting and grouting materials and to methods indicated in ceramic tile installation schedules.

TCA Installation Guidelines: TCA's "Handbook for Ceramic Tile Installation." Comply with TCA installation methods indicated in ceramic tile installation schedules.

Extend tile work into recesses and under or behind equipment and fixtures to form complete covering without interruptions, unless otherwise indicated. Terminate work neatly at obstructions, edges, and corners without disrupting pattern or joint alignments.

Accurately form intersections and returns. Perform cutting and drilling of tile without marring visible surfaces. Carefully grind cut edges of tile abutting trim, finish, or built-in items for straight aligned joints. Fit tile closely to electrical outlets, piping, fixtures, and other penetrations so plates, collars, or covers overlap tile.

Jointing Pattern: Lay tile in grid pattern, unless otherwise indicated. Align joints when adjoining tiles on floor, base, walls, and trim are same size. Lay out tile work and center tile fields in both directions in each space or on each wall area. Adjust to minimize tile cutting. Provide uniform joint widths, unless otherwise indicated.

Expansion Joints: Locate expansion joints and other sealant-filled joints, including control, contraction, and isolation joints, where indicated during installation of setting materials, mortar beds, and tile. Do not saw-cut joints after installing tiles.

Locate joints in tile surfaces directly above joints in existing concrete substrates.

Grout tile to comply with requirements of the following tile installation standards:

For ceramic tile grouts (sand-portland cement; dry-set, commercial portland cement; and latex-portland cement grouts), comply with ANSI A108.10.

FLOOR TILE INSTALLATION

General: Install tile to comply with requirements in the Floor Tile Installation Schedule, including those referencing TCA installation methods and ANSI A108 Series of tile installation standards.

For installations indicated below, follow procedures in ANSI A108 Series tile installation standards for providing 95 percent mortar coverage.

Tile floors in wet areas.
Tile floors in laundries.
Tile floors composed of tiles 8 by 8 inches or larger.
Tile floors composed of rib-backed tiles.

WALL TILE INSTALLATION

Install types of tile designated for wall installations to comply with requirements in the Wall Tile Installation Schedule, including those referencing TCA installation methods and ANSI setting-bed standards.

CLEANING AND PROTECTING

Cleaning: On completion of placement and grouting, clean all ceramic tile surfaces so they are free of foreign matter.

Remove latex-portland cement grout residue from tile as soon as possible.

Clean grout smears and haze from tile according to tile and grout manufacturer's written instructions, but no sooner than 10 days after installation. Use only cleaners recommended by tile and grout manufacturers and only after determining that cleaners are safe to use by testing on samples of tile and other surfaces to be cleaned. Protect metal surfaces and plumbing fixtures from effects of cleaning. Flush surfaces with clean water before and after cleaning.

When recommended by tile manufacturer, apply coat of neutral protective cleaner to completed tile walls and floors. Protect installed tile work with kraft paper or other heavy covering during construction period to prevent staining, damage, and wear.

Prohibit foot and wheel traffic from tiled floors for at least seven days after grouting is completed.

Before final inspection, remove protective coverings and rinse neutral cleaner from tile surfaces.

END OF SECTION 093013

PART 1 - GENERAL

RELATED DOCUMENTS

Drawings and general conditions of Contract, including General and Supplementary Conditions and Divisions-1 Specification sections apply to work of this section.

SUMMARY

Section Includes:

Acoustical ceiling panels.
Exposed grid suspension system.
Wire hangers, fasteners, main runners, cross tees, and wall angle moldings.

Related Sections:

Divisions 23 - HVAC
Division 26 Sections - Electrical Work

REFERENCES

American Society for Testing and Materials (ASTM):

ASTM A 1008 Standard Specification for Steel, Sheet, Cold Rolled, Carbon, Structural, High-Strength Low-Alloy and High-Strength Low-Alloy with Improved Formability.

ASTM A 641 Standard Specification for Zinc-Coated (Galvanized) Carbon Steel Wire.

ASTM A 653 Standard Specification for Steel Sheet, Zinc-Coated (Galvanized) by the Hot-Dip Process.

ASTM C 423 Sound Absorption and Sound Absorption Coefficients by the Reverberation Room Method.

ASTM E580 Standard Practice for Installation of Ceiling Suspension Systems for Acoustical Tile and Lay-in Panels in Areas Subject to Earthquake Ground Motions

ASTM C 635 Standard Specification for Metal Suspension Systems for Acoustical Tile and Lay-in Panel Ceilings.

ASTM C 636 Recommended Practice for Installation of Metal Ceiling Suspension Systems for Acoustical Tile and Lay-in Panels.

ASTM E 84 Standard Test Method for Surface Burning Characteristics of Building Materials.

ASTM E 1414 Standard Test Method for Airborne Sound Attenuation Between Rooms Sharing a Common Ceiling Plenum.

ASTM E 1111 Standard Test Method for Measuring the Interzone Attenuation of Ceilings Systems.

ASTM E 1264 Classification for Acoustical Ceiling Products.

ASTM E 1477 Standard Test Method for Luminous Reflectance Factor of Acoustical Materials by Use of Integrating-Sphere Reflectometers.

ASTM D 3273 Standard Test Method for Resistance to Growth of Mold on the Surface of Interior Coatings in an Environmental Chamber.

ASTM E 119 Standard Test Methods for Fire Tests of Building Construction and Material.

ASHRAE Standard 62.1-2004, "Ventilation for Acceptable Indoor Air Quality"

International Code Council-Evaluation Services - AC 156 Acceptance Criteria for Seismic Qualification Testing of Non-structural Components

International Code Council-Evaluation Services - Evaluation Report, ESR-1308, Fire- and Nonfire-Resistance-Rated Suspended Ceiling Framing Systems

ASCE 7 Standard - American Society of Civil Engineers, Minimum Design Loads for Buildings and Other Structures

SYSTEM DESCRIPTION

Seismic Loads: Provide all components to withstand seismic loads in accordance with the International Building Code, Section 1621 for Category D.

SUBMITTALS

Product Data: Submit manufacturer's technical data for each type of acoustical ceiling unit and suspension system required.

Samples: Minimum 6 inch x 6 inch samples of specified acoustical panel; 8 inch long samples of exposed wall molding and suspension system, including main runner and 4 foot cross tees.

Shop Drawings: Layout and details of acoustical ceilings. Show locations of items which are to be coordinated with, or supported by the ceilings.

Certifications: Manufacturer's certifications that products comply with specified requirements, including laboratory reports showing compliance with specified tests and standards. For acoustical performance, each carton of material must carry an approved independent laboratory classification of NRC, CAC, and AC.

If the material supplied by the acoustical subcontractor does not have an Underwriter's Laboratory classification of acoustical performance on every carton, subcontractor shall be required to send material from every production run appearing on the job to an independent or NVLAP approved laboratory for testing, at the architect's or owner's discretion. All products not conforming to manufacturer's current published values must be removed, disposed of and replaced with complying product at the expense of the Contractor performing the work.

QUALITY ASSURANCE

Single-Source Responsibility: Provide acoustical panel units and grid components by a single manufacturer.

Fire Performance Characteristics: Identify acoustical ceiling components with appropriate markings of applicable testing and inspecting organization.

Surface Burning Characteristics: As follows, tested per ASTM E 84 and complying with ASTM E 1264 for Class A products.

Flame Spread: 25 or less

Smoke Developed: 50 or less

Seismic Performance: Provide acoustical ceiling system that has been evaluated by an independent party and found to be compliant with the 2009 International Building Code, Seismic Category D.

Tested per International Code Council - Evaluation Services - AC 156 Acceptance Criteria for Seismic Qualification Testing of Non-structural Components as evidenced by International Code Council Evaluation Report, ESR-1308.

Handle acoustical ceiling units carefully to avoid chipping edges or damaged units in any way.

DELIVERY, STORAGE, AND HANDLING

Deliver acoustical ceiling units to project site in original, unopened packages and store them in a fully enclosed space where they will be protected against damage from moisture, direct sunlight, surface contamination, and other causes.

Before installing acoustical ceiling units, permit them to reach room temperature and a stabilized moisture content.

Handle acoustical ceiling units carefully to avoid chipping edges or damaged units in any way.

PROJECT CONDITIONS

Space Enclosure:

All ceiling products and suspension systems must be installed and maintained in accordance with Armstrong written installation instructions for that product in effect at the time of installation and best industry practice. Prior to installation, the ceiling product must be kept clean and dry, in an environment that is between 32°F (0°C) and 120°F (49°C) and not subject to Abnormal Conditions. Abnormal conditions include exposure to chemical fumes, vibrations, moisture from conditions such as building leaks or condensation, excessive humidity, or excessive dirt or dust buildup.

WARRANTY

Acoustical Panel: Submit a written warranty executed by the manufacturer, agreeing to repair or replace acoustical panels that fail within the warranty period. Failures include, but are not limited to:

Acoustical Panels: Sagging and warping as a result of defects in materials or factory workmanship.

Grid System: Rusting and manufacturer's defects

Acoustical Panels with BioBlock Plus or designated as inherently resistive to the growth of microorganisms installed with Armstrong suspension systems: Visible sag and will resist the growth of mold/mildew and gram positive and gram negative odor and stain causing bacteria.

Warranty Period Humiguard:

Acoustical and clean room panels: Ten (10) years from date of substantial completion.

Grid: Ten (10) years from date of substantial completion.

Acoustical panels and grid systems with HumiGuard Plus or HumiGuard Max performance supplied by one source manufacturer is thirty (30) years from date of substantial completion.

The Warranty shall not deprive the Owner of other rights the Owner may have under other provisions of the Contract Documents and will be in addition to and run concurrent with other warranties made by the Contractor under the requirements of the Contract Documents.

MAINTENANCE

Extra Materials: Deliver extra materials to Owner. Furnish extra materials described below that match products installed. Packaged with protective covering for storage and identified with appropriate labels.

Acoustical Ceiling Units: Furnish quality of full-size units equal to 5.0 percent of amount installed.

Exposed Suspension System Components: Furnish quantity of each exposed suspension component equal to 2.0 percent of amount installed.

PART 2-PRODUCTS

MANUFACTURERS

Ceiling Panels:

Armstrong World Industries, Inc.

ACOUSTICAL CEILING UNITS

Acoustical Panels Type ACT-1:

Surface Texture: Medium

Composition: Mineral Fiber

Color: White

Size: 24in X 24in X 3/4in

Edge Profile: Angled Tegular for interface with compatible Armstrong grid.

Noise Reduction Coefficient (NRC): ASTM C 423; Classified with UL label on product carton, 0.70.

Ceiling Attenuation Class (CAC): ASTM C 1414; Classified with UL label on product carton, 40

Emissions Testing: Section 01350 Protocol, < 13.5 ppb of formaldehyde when used under typical conditions required by ASHRAE Standard 62.1-2004, "Ventilation for Acceptable Indoor Air Quality"

Flame Spread: ASTM E 1264; Class A (UL)

Light Reflectance (LR): ASTM E 1477; White Panel: Light Reflectance: 0.85.

Antimicrobial Protection:

Acceptable Product: Fine Fissured, 1717 as manufactured by Armstrong World Industries.

Acoustical Panels Type ACT-2:

Surface Texture: Smooth

Composition: Mineral Fiber

Color: White

Size: 48in X 24in X 5/8in

Edge Profile: Square Lay-In.

Noise Reduction Coefficient (NRC): ASTM C 423; Classified with UL label on product carton, N/A.

Ceiling Attenuation Class (CAC): ASTM C 1414; Classified with UL label on product carton, 40

Emissions Testing: Section 01350 Protocol, < 13.5 ppb of formaldehyde when used under typical conditions required by ASHRAE Standard 62.1-2004, "Ventilation for Acceptable Indoor Air Quality"

Flame Spread: ASTM E 1264; Class A (UL)

Light Reflectance (LR): ASTM E 1477; White Panel: Light Reflectance: 0.80.

Dimensional Stability: HumiGuard Plus - Temperature is between 32°F (0° C) and 120°F (49° C). It is not necessary for the area to be enclosed or for HVAC systems to be functioning. All wet work (plastering, concrete, etc) must be complete and dry.

Antimicrobial Protection: BioBlock Plus - Resistance against the growth of mold/mildew and gram positive and gram negative odor and stain causing bacteria.

Acceptable Product: Clean Room VL, 870 as manufactured by Armstrong World Industries.

Install in existing grid system.

SUSPENSION SYSTEMS

Components: Main beams and cross tees In accordance with the International Building Code, Section 1621 for Category D as described in ESR-1308.

Structural Classification: ASTM C 635, Heavy Duty.

Color: White and match the actual color of the selected ceiling tile, unless noted otherwise.

Represented Systems: Prelude XL 15/16" Exposed Tee System as manufactured by Armstrong World Industries.

Attachment Devices: In accordance with the International Building Code, Section 1621 for Category D.

Wire for Hangers and Ties: In accordance with the International Building Code, Section 1621.

Wall Moldings: In accordance with the International Building Code, Section 1621 for Category D or method as described in ESR-1308.

Nominal 7/8 inch x 7/8 inch hemmed, pre-finished angle molding (7800) (7802) (7803) (780036) (HD7801)

Accessories:

BERC2 - 2 inch Beam End Retaining Clip, 0.034 inch thick, hot-dipped galvanized cold-rolled steel per ASTM A568 - used to join main beam or cross tee to wall molding.

PART 3 - EXECUTION

EXAMINATION

Do not proceed with installation until all wet work such as skim coating and painting has been completed and thoroughly dried out, unless expressly permitted by manufacturer's printed recommendations.

PREPARATION

Measure each ceiling area and establish layout of acoustical units to balance border widths at opposite edges of each ceiling. Avoid use of less than half width units at borders, and comply with reflected ceiling plans. Coordinate panel layout with mechanical and electrical fixtures.

Coordination: Furnish layouts for preset inserts, clips, and other ceiling anchors whose installation is specified in other sections.

INSTALLATION (CATEGORY D)

Install suspension system and panels in accordance with the International Building Code, Section 1621, except as noted in Section 4.4.3.1 of ESR-1308, and with the authorities having jurisdiction.

ESR-1308, Section 4.4.3.1, Alternate Seismic Design Category D,E and F Installation:

Under this installation, the runners must be rated heavy-duty and have a minimum simple span uniform load of 16.35 pounds per lineal foot (238 N/m); maximum ceiling weight permitted is 4.0 pounds per square foot (19.5 kg/m2).

The BERC-2 clip is used to secure the main runners and cross runners on two adjacent walls to the structure and the two opposite walls to the perimeter trim, as detailed below. A nominal 7/8-inch (22 mm) wall molding is used in lieu of the 2-inch (51 mm) perimeter supporting closure angle required by Section 9.6.2.6.2.2 (b) of ASCE-7 for Seismic Design Categories D, E and F. Except for the use of the BERC-2 clip and the 7/8-inch (22 mm) wall molding and elimination of spreader bars, installation of the ceiling system must be as prescribed by the applicable code.

The BERC-2 clip is attached to the wall molding by sliding the locking lances over the hem of the vertical leg of the wall molding. Clips installed on the walls where the runners are fixed are attached to the runner by a sheet metal screw through the horizontal slot in the clip into the web of the runner.

Clips installed on the walls where the runners are not fixed to the runner allow the terminal runner end to move 3/4 inch (19.1 mm) in both directions. BERC-2 clips installed in this manner are an acceptable means of preventing runners from spreading in lieu of spacer bars required in CISCA 3-4, which is referenced in ASCE 7, Section 9.6.2.6.2.2, which is referenced in IBC Section 1621.

For reveal edge panels: Cut and reveal or rabbet edges of ceiling panels at border areas and vertical surfaces.

Install acoustical panels in coordination with suspended system, with edges resting on flanges of main runner and cross tees. Cut and fit panels neatly against abutting surfaces without gaps. Support edges by wall moldings.

FIELD QUALITY CONTROL

Suspended ceiling shall be subject to the special inspection requirements in Section 01 45 33 (01450) - Code-Required Special Inspections and Procedures.

ADJUSTING AND CLEANING

Replace damaged and broken panels.

Clean exposed surfaces of acoustical ceilings, including trim, edge moldings, and suspension members. Comply with manufacturer's instructions for cleaning and touch up of minor finish damage.

Ceiling Touch-Up Paint, (Item #5760, 8oz. bottles) (Item #5761, quart size cans), "global white" latex paint should be used to hide minor scratches and nicks in the surface and to cover field tegularized edges that are exposed to view.

Remove and replace work that cannot be successfully cleaned and repaired to permanently eliminate evidence of damage

END OF SECTION 095113

THIS PAGE INTENTIONALLY BLANK

PART 1 - GENERAL

RELATED DOCUMENTS

Drawings and general provisions of the Contract, including General and Supplementary Conditions and Division 1 Specification Sections, apply to this Section.

SUMMARY

This Section includes surface preparation, painting, and finishing of exposed interior and exterior items and surfaces.

Paint all previously field painted exposed surfaces whether or not colors are designated in schedules, except where a surface or material is specifically indicated not to be painted or is to remain natural. Where an item or surface is not specifically mentioned, paint the same as similar adjacent materials or surfaces. If color or finish is not designated, the Architect will select from the complete line of custom colors or finishes available.

Painting is not required on prefinished items, finished metal surfaces, concealed surfaces, operating parts, and labels.

Prefinished items not to be painted include the following factory-finished components:

Naturally finished wood doors.

Light fixtures.

Concealed surfaces not to be painted include wall or ceiling surfaces in the following generally inaccessible areas:

Foundation spaces.

Furred areas.

Pipe spaces.

Finished metal surfaces not to be painted include:

Anodized aluminum.

Stainless steel.

Chromium plate.

Copper.

Bronze.

Brass.

Labels: Do not paint over Underwriters Laboratories, Factory Mutual or other code-required labels or equipment name, identification, performance rating, or nomenclature plates.

VOC Content: Provide materials that comply with VOC limits of authorities having jurisdiction.

autotroph
architecture.planning.sustainable design consulting
617 B Paulin St. Santa Fe, NM 87505

SUBMITTALS

General: Submit the following according to Conditions of the Contract and Division 1 Specification Sections.

Product data for each paint system specified.

Provide the manufacturer's technical information including label analysis and instructions for handling, storage, and application of each material proposed for use.

List each material and cross-reference the specific coating, finish system, and application. Identify each material by the manufacturer's catalog number and general classification.

Certification by the manufacturer that products supplied comply with local regulations controlling use of volatile organic compounds (VOCs).

Samples for Verification Purposes: Unless Owner's standard paint finish is provided submit samples of each color and material to be applied, with texture to simulate actual conditions, on representative samples of the actual substrate.

QUALITY ASSURANCE

Applicator Qualifications: Engage an experienced applicator who has completed painting system applications similar in material and extent to those indicated for the Project that have resulted in a construction record of successful in-service performance.

Single-Source Responsibility: Provide primers and undercoat paint produced by the same manufacturer as the finish coats.

DELIVERY, STORAGE, AND HANDLING

Deliver materials to the job site in the manufacturer's original, unopened packages and containers bearing manufacturer's name and label, and the following information:

Product name or title of material.
Product description (generic classification or binder type).
Manufacturer's stock number and date of manufacture.
Contents by volume, for pigment and vehicle constituents.
Thinning instructions.
Application instructions.
Color name and number.

Store materials not in use in tightly covered containers in a well-ventilated area at a minimum ambient temperature of 45 deg F (7 deg C). Maintain containers used in storage in a clean condition, free of foreign materials and residue.

Protect from freezing. Keep storage area neat and orderly. Remove oily rags and waste daily. Take necessary measures to ensure that workers and work areas are protected from fire and health hazards resulting from handling, mixing, and application.

JOB CONDITIONS

Apply water-based paints only when the temperature of surfaces to be painted and surrounding air temperatures are between 50 deg F (10 deg C) and 90 deg F (32 deg C).

Apply solvent-thinned paints only when the temperature of surfaces to be painted and surrounding air temperatures are between 45 deg F (7 deg C) and 95 deg F (35 deg C).

Do not apply paint in snow, rain, fog, or mist; or when the relative humidity exceeds 85 percent; or at temperatures less than 5 deg F (3 deg C) above the dew point; or to damp or wet surfaces.

EXTRA MATERIALS

Furnish extra paint materials from the same production run as the materials applied and in the quantities described below. Furnish paint with manufacturer's original identifying labels describing contents. Deliver extra paint to Owner after completion of work and obtain a receipt for each color.

Furnish one gallon of finish paint for each type, color and sheen of applied paint.

PART 2 - PRODUCTS

MANUFACTURERS

Basis-of-Design Product: Subject to compliance with requirements, provide Sherwin-Williams Company products indicated or comparable product from one of the following:

Benjamin Moore & Co.
Glidden Professional, Division of PPG Architectural Finishes, Inc.
M.A.B. Paints.
PPG Architectural Finishes, Inc.

PAINT MATERIALS, GENERAL

Material Compatibility: Provide, primers, finish coat materials, and related materials that are compatible with one another and the substrates indicated under conditions of service and application, as demonstrated by the manufacturer based on testing and field experience.

Material Quality: Provide the manufacturer's best-quality trade sale paint material of the various coating types specified. Paint material containers not displaying manufacturer's product identification will not be acceptable.

Proprietary Names: Use of manufacturer's proprietary product names to designate colors or materials is not intended to imply that products named are required to be used to the exclusion of equivalent products of other manufacturers. Furnish the manufacturer's material data and certificates of performance for proposed substitutions.

Colors: Provide color selections made by the Architect from the manufacturer's full range of custom mixed colors.

Accent colors indicated may be deep tones.

LATEX JOINT-SEALANT

Applications: Painter's caulk for interior joints.

Latex Sealant: Where joint sealants of this type are indicated or required to fill minor gaps, provide products complying with the following:

Products: Available products include the following:

Chem-Calk 600; Bostik Inc.
ALEX Painters Caulk; DAP Products Inc.
AC-20; Pecora Corporation.
PSI-701; Polymeric Systems, Inc.
Sonolac; Sonneborn Building Products Div., ChemRex, Inc.
Tremflex 834; Tremco.

PART 3 - EXECUTION

EXAMINATION

Examine substrates and conditions under which painting will be performed for compliance with paint application requirements. Surfaces receiving paint must be thoroughly dry before paint is applied.

Do not begin to apply paint until unsatisfactory conditions have been corrected.

Start of painting will be construed as the Applicator's acceptance of surfaces and conditions within a particular area.

Notify the Architect about anticipated problems using the materials specified over previously primed and finished substrates.

PREPARATION

General: Remove hardware, electrical device plates, equipment, light fixtures, signage, equipment and similar removable items that are not to be painted. Do not attempt to mask or paint around these items unless acceptable to Architect. Following completion of painting operations in each space or area, have items reinstalled by workers skilled in the trades involved.

Reinstall all items when paint is dry.

Cleaning: Before applying paint or other surface treatments, clean the substrates of substances that could impair the bond of the various coatings. Remove oil and grease prior to cleaning. Schedule cleaning and painting so dust and other contaminants from the cleaning process will not fall on wet, newly painted surfaces.

Surface Preparation: Clean and prepare surfaces to be painted according to the manufacturer's instructions for each particular substrate condition and as specified.

Provide barrier coats over incompatible existing coatings or remove and reprime. Notify Architect in writing about anticipated problems using the specified finish-coat material with previously painted substrates.

Concrete Substrates: Remove release agents, curing compounds, efflorescence, and chalk. Do not paint surfaces if moisture content or alkalinity of surfaces to be painted exceeds that permitted in manufacturer's written instructions.

Steel Substrates: Remove rust, loose mill scale, and shop primer if any. Clean using methods recommended in writing by paint manufacturer.

Shop-Primed Steel Substrates: Clean field welds, bolted connections, and abraded areas of shop paint, and paint exposed areas with the same material as used for shop priming to comply with SSPC-PA 1 for touching up shop-primed surfaces.

Galvanized-Metal Substrates: Remove grease and oil residue from galvanized sheet metal by mechanical methods to produce clean, lightly etched surfaces that promote adhesion of subsequently applied paints.

Aluminum Substrates: Remove loose surface oxidation.

Wood Substrates:

Scrape and clean knots. Before applying primer, apply coat of knot sealer recommended in writing by topcoat manufacturer for exterior use in paint system indicated.

Sand surfaces that will be exposed to view, and dust off.

Prime edges, ends, faces, undersides, and backsides of wood.

After priming, fill holes and imperfections in the finish surfaces with putty or plastic wood filler. Sand smooth when dried.

Plastic Trim Fabrication Substrates: Remove dust, dirt, and other foreign material that might impair bond of paints to substrates.

Previously Painted Surfaces: If in sound condition, clean the surface of all foreign material. Smooth, hard or glossy coatings and surfaces should be dulled by abrading the surface. Apply a test area, allowing paint to dry before testing adhesion. If adhesion is poor, additional abrasion of the surface and/or removal of the previous coating may be necessary. Retest surface for adhesion. If paint is peeling or badly weathered, sand and clean surface to sound substrate and treat as a new surface.

Ferrous Metals: Clean previously painted ferrous metal surfaces to remove oil, grease, dirt, and other foreign substances. Rust or other corrosion shall be removed to bare, shiny metal and immediately primed as specified. Use solvent or mechanical cleaning methods that comply with recommendations of the Steel Structures Painting Council (SSPC).

Touch up bare areas and shop-applied prime coats that have been damaged. Wire-brush, clean with solvents recommended by the paint manufacturer, and touch up with the same primer as the shop coat.

Repair holes, cracks, scuffed or marred surfaces and other existing damage in surfaces to be repainted. Sand repair smooth and spot prime so that no evidence of repair remains after painting. Use repair compounds and putties specifically formulated and recommended by the manufacturer for the specific repair.

Materials Preparation: Carefully mix and prepare paint materials according to manufacturer's directions.

Maintain containers used in mixing and applying paint in a clean condition, free of foreign materials and residue.

Stir material before application to produce a mixture of uniform density; stir as required during application. Do not stir surface film into material. Remove film and, if necessary, strain material before using.

Use only thinners approved by the paint manufacturer and only within recommended limits.

Tinting: Tint each undercoat a lighter shade to facilitate identification of each coat where multiple coats of the same material are applied. Tint undercoats to match the color of the finish coat, but provide sufficient differences in shade of undercoats to distinguish each separate coat.

autotroph
architecture.planning.sustainable design consulting
617 B Paulin St. Santa Fe, NM 87505

APPLICATION

General: Apply paint according to manufacturer's directions. Use applicators and techniques best suited for substrate and type of material being applied.

Do not paint over dirt, rust, scale, grease, moisture, scuffed surfaces, cracked surfaces or conditions detrimental to formation of a durable paint film. All loose existing paint shall be removed prior to beginning new painting.

Paint color locations, surface treatments, and finishes are indicated in the schedules.

Provide finish coats that are compatible with primers used.

The number of coats and the film thickness required are the same regardless of the application method. Do not apply succeeding coats until the previous coat has cured as recommended by the manufacturer. Sand between applications where sanding is required to produce a smooth even surface according to the manufacturer's directions.

Apply additional coats if undercoats, stains, or other conditions show through final coat of paint until paint film is of uniform finish, color, and appearance. Give special attention to ensure that surfaces, including edges, corners, crevices, welds, and exposed fasteners, receive a dry film thickness equivalent to that of flat surfaces.

The term exposed surfaces includes areas visible when permanent or built-in fixtures, convector covers, covers for finned tube radiation, grilles, and similar components are in place. Extend coatings in these areas, as required, to maintain the system integrity and provide desired protection.

Paint surfaces behind movable equipment and furniture the same as similar exposed surfaces.

Sand lightly between each succeeding enamel coat.

Omit primer on metal surfaces that have been shop-primed and touch-up painted.

Scheduling Painting: Apply first coat to surfaces that have been cleaned, pretreated, or otherwise prepared for painting as soon as practicable after preparation and before subsequent surface deterioration.

Allow sufficient time between successive coats to permit proper drying. Do not recoat until paint has dried to where it feels firm, does not deform or feel sticky under moderate thumb pressure, and where application of another coat of paint does not cause the undercoat to lift or lose adhesion.

Application Procedures: Apply paints and coatings by brush, roller, spray, or other applicators according to the manufacturer's directions.

Brushes: Use brushes best suited for the material applied.

Rollers: Use rollers of carpet, velvet back, or high-pile sheep's wool as recommended by the manufacturer for the material and texture required.

Minimum Coating Thickness: Apply materials no thinner than the manufacturers recommended spreading rate. Provide the total dry film thickness of the entire system as recommended by the manufacturer.

Mechanical and Electrical Work: Painting of mechanical and electrical work is limited to previously field painted items exposed in mechanical equipment rooms and in occupied spaces.

Electrical items to be painted include, but are not limited to, the following:

Raceway, conduit and fittings.

Prime Coats: Before applying finish coats, apply a prime coat of material, as recommended by the manufacturer, to material that is required to be painted or finished and that has not been prime-coated by others. Recoat primed and sealed surfaces where evidence of suction spots or unsealed areas in first coat appears, to ensure a finish coat with no burn-through or other defects due to insufficient sealing.

Stipple Enamel Finish: Roll and redistribute paint to an even and fine texture. Leave no evidence of rolling such as laps, irregularity in texture, skid marks, or other surface imperfections.

Pigmented (Opaque) Finishes: Completely cover to provide a smooth, opaque surface of uniform finish, color, appearance, and coverage. Cloudiness, spotting, holidays, laps, brush marks, runs, sags, ropiness, or other surface imperfections will not be acceptable.

Completed Work: Match approved samples for color, texture, and coverage. Remove, refinish, or repaint work not complying with specified requirements.

CLEANING

Cleanup: At the end of each work day, remove empty cans, rags, rubbish, and other discarded paint materials from the site.

After completing painting, clean glass and paint-spattered surfaces. Remove spattered paint by washing and scraping. Be careful not to scratch or damage adjacent finished surfaces.

The disposal of hazardous waste shall conform to applicable federal, state and local regulations.

PROTECTION

Protect work of other trades, whether being painted or not, against damage by painting. Correct damage by cleaning, repairing or replacing, and repainting, as acceptable to Architect.

Provide "Wet Paint" signs to protect newly painted finishes. Remove temporary protective wrappings provided by others to protect their work after completing painting operations.

At completion of construction activities of other trades, touch up and restore damaged or defaced painted surfaces.

INTERIOR PAINT SCHEDULE

General: Provide the following paint systems for the various substrates, as indicated.

Provide additional coats as required to achieve full coverage.

GYPSUM BOARD WALLS (EGGSHELL):

Low Luster (Eggshell) Enamel Emulsion Finish: Two (2) finish coats.

Primer: Interior latex primer at new walls or as a spot primer for repairs to existing walls.

S-W: Premium Wall & Wood Primer B28W8111: Applied at a dry film thickness of not less than 1.8 mils.

First and Second Finish Coats: Interior Low-Luster (Eggshell): Apply over manufacturer's recommended spot primer for existing substrate at unprimed surfaces.

S-W: ProMar 200 Interior Latex Egg-Shell Enamel B20W200 Series: Applied at a dry film thickness of not less than 1.6 mils.

EXISTING PAINTED GYPSUM BOARD CEILINGS (FLAT):

Flat Latex Finish: Two (2) finish coats.

First and Second Finish Coats: Flat Latex Finish. Apply over manufacturer's recommended spot primer for existing substrate at unprimed surfaces.

S-W: ProMar 200 Interior Latex Flat B30W200 Series: Applied at a dry film thickness of not less than 1.3 mils.

EXISTING PREVIOUSLY PAINTED WOODWORK:

Waterbased Acrylic-Alkyd Semi-Gloss: Primer and two (2) finish coats.

Primer: Interior latex spot primer on unprimed wood.

S-W: Premium Wall & Wood Primer B28W8111, at 4.0 mils wet, 1.8 mils dry.

First and Second Finish Coats: Water-based acrylic-alkyd, semi-gloss, interior: Apply over manufacturer's recommended spot primer at unprimed surfaces.

S-W: : S-W ProMar 200 Waterbased Acrylic-Alkyd Semi-Gloss, B35-8200 Series, at 4.0 mils wet, 1.7 mils dry, per coat.

EXISTING PREVIOUSLY PAINTED FERROUS METAL OR NEW SHOP PRIMED FERROUS METAL:

Waterbased Acrylic-Alkyd Semi-Gloss: Spot primer and two (2) finish coats.

Primer: Rust-inhibitive, water based, MPI #107.

S-W: S-W Pro Industrial Pro-Cryl Universal Primer, B66-310 Series, at 5.0 to 10.0 mils wet, 2.0 to 4.0 mils dry.

First and Second Finish Coats: Interior Waterbased Semi-Gloss Acrylic-Alkyd.

S-W: ProMar 200 Interior Waterbased Acrylic-Alkyd Semi-Gloss B35-8200 Series: Applied at a dry film thickness of not less than 1.7 mils per coat.

EXTERIOR PAINT SCHEDULE

General: Provide the following paint systems for the various substrates, as indicated.

Provide additional coats as required to achieve full coverage.

WOOD

Exterior Acrylic Opaque Stain. Self-priming.

First and Second Finish Coats: Factory-formulated full-gloss alkyd enamel for exterior application.

S-W: Sherwin-Williams; Woodscapes House Stain: Applied at a dry film thickness of not less than 2.0 mils (0.051 mm).

Note: Clean any galvanized metal hangers or brackets per manufacturer's written instruction prior to coating.

FERROUS METAL:

Gloss Finish, Water-Based Light Industrial Coating: Two (2) finish coats over shop primer.

Primer; Water-based, anti-corrosive for metal, MPI #107.

S-W Prime Coat: S-W Pro Industrial Pro-Cryl Universal Primer, B66-310 Series, 5.0 to 10.0 mils wet, 2.0 to 4.0 mils dry.

First and Second Finish Coats: Light industrial coating, exterior, water based. Gloss Level 6, MPI #164

S-W: Sherwin-Williams; Pro Industrial Acrylic Gloss Coating, B66-600 Series, at 2.5 to 4.0 mils dry, per coat.

END OF SECTION 099000

autotroph
architecture.planning.sustainable design consulting
617 B Paulin St. Santa Fe, NM 87505

THIS PAGE INTENTIONALLY BLANK

PART 1 - GENERAL

RELATED DOCUMENTS

Drawings and general provisions of the Contract, including General and Supplementary Conditions and Division 1 Specification Sections, apply to this Section.

SUMMARY

This Section includes the following types of signs:

Interior panel signs.

SUBMITTALS

General: Submit the following according to the Conditions of the Contract and Division 1 Specification Sections.

Product data for each type of sign specified, including details of construction relative to materials, dimensions of individual components, profiles, and finishes.

Shop drawings showing fabrication and erection of signs. Include plans, elevations, and large-scale sections of typical members and other components. Show anchors, grounds, layout, reinforcement, accessories, and installation details.

Provide message list for each sign required, including large-scale details of wording and lettering layout.

Samples: Provide the following samples of each sign component for initial selection of color, pattern and surface texture as required and for verification of compliance with requirements indicated.

Samples for initial selection of color, pattern, and texture:

Plastic Sheet Material: Manufacturer's color charts consisting of actual sections of material including the full range of colors available for each material required.

Samples for verification of color, pattern, and texture selected and compliance with requirements indicated:

Panel Sign: Provide a sample panel to include a representative sample of the graphic image process required, showing graphic style, and colors and finishes of letters, numbers, and other graphic devices.

QUALITY ASSURANCE

Sign Fabricator Qualifications: Firm experienced in producing signs similar to those indicated for this Project, with a record of successful in-service performance, and sufficient production capacity to produce sign units required without causing delay in the Work.

Single-Source Responsibility: For each separate sign type required, obtain signs from one source of a single manufacturer.

Regulatory Requirements: Comply with the Americans with Disabilities Act (ADA) and with code provisions as adopted by authorities having jurisdiction.

Interior Code Signage: Provide signage as required by accessibility regulations and requirements of authorities having jurisdiction. These include, but are not limited to, the following:

Tactile Exit Signs

Signs for Accessible Spaces:

Design Concept: The Drawings indicate sizes, profiles, and dimensional requirements of signs and are based on the specific types and models indicated. Sign units by other manufacturers may be considered provided deviations in dimensions and profiles do not change the design concept as judged by the Architect. The burden of proof of equality is on the proposer.

PROJECT CONDITIONS

Field Measurements: Take field measurements prior to preparation of shop drawings and fabrication to ensure proper fitting. Show recorded measurements on final shop drawings. Coordinate fabrication schedule with construction progress to avoid delay.

PART 2 - PRODUCTS

PANEL SIGNS

Panel Signs: Comply with requirements indicated for materials, thicknesses, finishes, colors, designs, shapes, sizes, and details of construction.

Produce smooth, even, level sign panel surfaces, constructed to remain flat under installed conditions within a tolerance of plus or minus 1/16 inch measured diagonally.

Unframed Panel Signs: Fabricate signs with one piece sign face permanently laminated to an acrylic backplate with etched tactile lettering and Braille characters:

Edge Condition: Square cut.

Corner Condition: Square corners.

Material: Plastic.

Graphic Content and Style: Provide sign copy that complies with the requirements indicated for size, style, spacing, content, position, material, finishes, and colors of letters, numbers, and other graphic devices.

Provide panel signage which comply with the Americans with Disabilities Act (ADA) and all local codes.

Include accurately translated Grade 2 Braille characters for all panel signs.

Raised Copy: Using manufacturer's photopolymer method produce a single piece sign face with precisely formed raised characters.

Raised Copy Thickness: Not less than 1/32 inch.

Colors: As indicated.

Letter Height: As indicated.

Letter Style: As indicated.

Tactile and Braille Copy: Manufacturer's standard process for producing copy complying with ADA Accessibility Guidelines and ICC/ANSI A117.1. Text shall be accompanied by Grade 2 braille. Produce precisely formed characters with square cut edges free from burrs and cut marks.

PART 3 - EXECUTION

EXAMINATION

Examine substrates, areas, and conditions, with Installer present, for compliance with requirements for installation tolerances and other conditions affecting performance of work.

Examine supporting members to ensure that surfaces are at elevations indicated or required to comply with authorities having jurisdiction and are free from dirt and other deleterious matter.

Proceed with installation only after unsatisfactory conditions have been corrected.

INSTALLATION

General: Locate signs and accessories where indicated, using mounting methods of types described and in compliance with manufacturer's written instructions.

Install signs level, plumb, and at heights indicated, with sign surfaces free from distortion and other defects in appearance.

Interior Wall Signs: Install signs on walls adjacent to latch side of door where applicable. Where not indicated or possible, such as double doors, install signs on nearest adjacent walls. Locate to allow approach within 3 inches of sign without encountering protruding objects or standing within swing of door.

Wall-Mounted Panel Signs: Attach panel signs to wall surfaces using methods indicated below:

Mechanical Fasteners: Attach panel signs to wall surfaces with a minimum of (4) four countersunk, tamperproof, stainless steel screws located in each corner of the sign. Holes in signage shall be predrilled by sign manufacturer. Attach signs with fasteners and anchors suitable for secure attachment to substrate as recommended in writing by sign manufacturer.

Where panel signs are scheduled or indicated to be mounted on glass, provide matching plate on opposite side of glass to conceal mounting materials. Use manufacturer’s recommended adhesive mounting method.

CLEANING AND PROTECTION

After installation, clean soiled sign surfaces according to the manufacturer's instructions. Protect units from damage until acceptance by the Owner.

END OF SECTION 101423

THIS PAGE INTENTIONALLY BLANK

PART 1 - GENERAL

RELATED DOCUMENTS

Drawings and general provisions of the Contract, including General and Supplementary Conditions and Division 1 Specification Sections, apply to this Section.

SUMMARY

This Section includes plastic-laminate units as follows:

Toilet Enclosures: Overhead braced, floor anchored.
Urinal Screens: Wall hung.

Related Sections include the following:

Division 6 Section "Miscellaneous Carpentry" for blocking.

Division 10 "Grab Bars" for grab bars.

1.2 REFERENCES

American National Standards Institute:

ANSI A208.1 - Mat-Formed Wood Particleboard.

APA-The Engineered Wood Association:

APA/EWA PS 1 - Voluntary Product Standard for Construction and Industrial Plywood.

ASTM International:

ASTM A666 - Standard Specification for Austenitic Stainless Steel Sheet, Strip, Plate, and Flat Bar.

Forest Stewardship Council:

FSC Guidelines - Forest Stewardship Council Guidelines.

National Electrical Manufacturers Association:

NEMA LD 3 - High Pressure Decorative Laminates.

Regulatory Requirements: Comply with provisions of the following:

Accessibility Requirements: Where indicated to comply with accessibility requirements, comply with the U.S. Architectural & Transportation Barriers Compliance Board's "Americans with Disabilities Act (ADA), Accessibility Guidelines for Buildings and Facilities (ADAAG)", ANSI A117.1 and FED-STD-795, "Uniform Federal Accessibility Standards" whichever is more restrictive.

SUBMITTALS

Product Data: For each type of product indicated. Include construction details, material descriptions, dimensions of individual components and profiles, and finishes.

Shop Drawings: Include plans, elevations, sections, details, and attachments to other work.

Show locations of cutouts for compartment-mounted toilet accessories.

Show locations of reinforcements for compartment-mounted grab bars.

Samples for Initial Selection: For each type of unit indicated.

Samples for Verification: Of each type of color and finish required for units, prepared on 6-inch- 150-mm-) square Samples of same thickness and material indicated for Work.

PROJECT CONDITIONS

Field Measurements: Verify actual locations of walls, columns, ceilings, and other construction contiguous with toilet compartments by field measurements before fabrication and indicate measurements on Shop Drawings.

Established Dimensions: Where field measurements cannot be made without delaying the Work, establish dimensions and proceed with fabricating toilet compartments without field measurements. Coordinate wall, floor, ceilings, and other contiguous construction to ensure that actual dimensions correspond to established dimensions.

COORDINATION

Coordinate Work with placement of support framing and anchors in wall.

WARRANTY

Manufacturer's Warranty (DesignerSeries): Manufacturer's standard 2 year warranty for materials and workmanship. Manufacturer's standard 1 year guarantee against defects in material and workmanship for stainless steel door hardware and mounting brackets

PART 2 - PRODUCTS

HIGH PRESSURE LAMINATE SUBSTRATE WITH STEEL CORE REINFORCED STILES

Basis-of-Design Products: Based on the quality and performance requirements of the project, specifications are based solely on the products of Bobrick Washroom Equipment, Inc.. www.bobrick.com

High Pressure Laminate Partitions with Steel Core Stiles: Bobrick DesignerSeries.

Color: As selected by Architect from manufacturer's standard DesignerSeries range.

Toilet Partitions:

Configuration: Floor-Anchored, Overhead-Braced partitions; satin finish, extruded anodized aluminum headrails, 0.065 inch (1.65 mm) thick with anti-grip profile.

Basis-of-Design: Bobrick 1042 DesignerSeries Toilet Partitions.

Hardware: Standard hardware.

Fire Resistance:

Flame Spread Index (ASTM E 84): 60 for panels, doors and stiles.

Smoke Developed Index (ASTM E 84): 195 for panels, doors and stiles.

National Fire Protection Association/International Building Code Interior Wall and Ceiling Finish: Class B.

Urinal Privacy Screens:

Basis-of-Design: Bobrick 1045 DesignerSeries Wall-Hung Urinal Privacy Screens.

Hardware: To match partition hardware.

Fire Resistance:

Flame Spread Index (ASTM E 84): 60 for panels and stiles.

Smoke Developed Index (ASTM E 84): 195 for panels and stiles.

National Fire Protection Association/International Building Code Interior Wall and Ceiling Finish: Class B.

Finished Thickness: 1 inch (25 mm) for stiles, doors, screens and panels. Finished thickness of doors and stiles to ensure flush front.

Materials: 3-ply, stiles, panels, doors, and screens.

Cores: 45 lb (20.4 kg) density, industrial grade, resin-impregnated, particle board.

Surfaces: High Pressure Laminate ANSI/NEMA LD3-2005 minimum thickness 0.035 inch (0.89 mm).

Reinforcement: Steel core stiles, 11-gauge (3.2mm) sheet steel reinforcement; leveling device welded to sheet-steel core of stiles.

Fabrication: High Pressure Laminate bonded to core material with adhesive specially formulated to prevent delamination. Edges bonded prior to bonding face sheets. Splices or joints in faces or edges are not acceptable except in the case of laminate material limitations.

Stiles: Floor-Anchored stiles furnished with expansion shields and threaded rods.

Leveling Devices: 3/8 inch x 7/8 inch (10 mm x 22 mm) steel bar welded to 11 gauge (3 mm) steel-reinforcing core; chromate-treated and double zinc-plated; welded to sheet-steel core of stiles.

Stile Shoes: One-piece, 22 gauge (0.8 mm), 18-8, Type 304 stainless steel, 4 inch (102 mm) height; tops with 90 degree return to stile. One-piece shoe capable of adapting to 3/4 inch (19 mm) or 1 inch (25 mm) stile thickness and capable of being fastened (by clip) to stiles starting at wall line.

Anchors: Expansion shields and threaded rods at floor connections as applicable.

Hardware:

Compliance: Meet all accessibility requirements at accessible stalls. Operable with one hand, without tight grasping, pinching, or twisting of the wrist, and force to operate does not exceed five pounds.

Emergency Access: Hinges, latch allow door to be lifted over keeper from outside compartment.

Materials: 18-8, Type-304 stainless steel with satin finish for latches, hinges, coat hooks and bumpers, U-channels and mounting brackets. Chrome-plated "Zamak", aluminum, or extruded plastic hardware not acceptable.

Fastening: Hardware secured to door and stile by stainless steel machine screws fastened into factory-installed, threaded inserts. Fasteners secured directly into core not acceptable.

Mounting: Hinges, keepers, latches, clothes hooks and their fasteners concealed inside compartment. Exposed hinges, keepers, latches, clothes hooks and their fasteners on exterior of compartment not acceptable with the exception of accessible compartments.

autotroph
architecture.planning.sustainable design consulting
617 B Paulin St. Santa Fe, NM 87505

Hardware Type: Standard, commercial hardware.

Door Pull: Manufacturer's standard unit at out-swinging doors that complies with accessibility requirements of authorities having jurisdiction. Provide pulls on both sides of doors at compartments indicated to be accessible to people with disabilities

Latching: Track of door latch prevents inswing doors from swinging out beyond stile; on outswing doors, door keeper prevents door from swinging in beyond stile; 14 gauge (2 mm) sliding door latch, 11 gauge (3.2 mm) keeper. Twist-style door latch operation not acceptable.

Hinges: Self-closing, balanced, with field-adjustable cam to permit door to be fully closed or partially open when compartment is unoccupied.

Locking: Door locked from inside by sliding door latch into keeper.

Coat Hook: Manufacturer's standard combination hook and rubber-tipped bumper, sized to prevent door from hitting compartment-mounted accessories. At accessible toilet stalls provide coat hooks at 48-iches above finished floor.

Mounting Brackets: Mounted inside compartment; exposed brackets on exterior of compartment not acceptable with the exception of outswing doors.

PART 3 - EXECUTION

EXAMINATION

Verify field measurements are as indicated on shop drawings.

Verify correct spacing of plumbing fixtures.

Verify correct location of built-in framing, anchorage, and bracing.

INSTALLATION

Install products in strict compliance with manufacturer's written instructions and recommendations, including the following:

Verify blocking and supports in walls and ceilings have been installed properly at points of attachment.

Verify location does not interfere with door swings or use of fixtures.

Use fasteners and anchors suitable for substrate and project conditions

Install units rigid, straight, plumb, and level.

Conceal evidence of drilling, cutting, and fitting to room finish.

Test for proper operation.

ADJUSTING

Hardware Adjustment: Adjust and lubricate hardware according to manufacturer's written instructions for proper operation. Set hinges on in-swinging doors to hold doors open approximately 30 degrees from closed position when unlatched. Set hinges on out-swinging doors to return doors to fully closed position.

Field touch-up of scratches or damaged finish will not be permitted. Replace damaged or scratched materials with new materials.

END OF SECTION 102113

PART 1 - GENERAL

RELATED DOCUMENTS

Drawings and general provisions of the Contract, including General and Supplementary Conditions and Division 1 Specification Sections, apply to this Section.

SUMMARY

This Section includes the following:

Grab bars.

Underlavatory guards.

SUBMITTALS

Product Data: Include construction details, material descriptions and thicknesses, dimensions, profiles, fastening and mounting methods, specified options, and finishes for each type of accessory specified.

QUALITY ASSURANCE

Product Options: Accessory requirements, including those for materials, finishes, dimensions, capacities, and performance, are established by the specific products indicated.

Products of other manufacturers with equal characteristics, as judged solely by Architect, may be provided.

COORDINATION

Coordinate accessory locations with other work to prevent interference with clearances required for access by disabled persons, proper installation, adjustment, operation, cleaning, and servicing of accessories. Install solid blocking where necessary for secure installation.

Deliver inserts and anchoring devices set into concrete or masonry as required to prevent delaying the Work.

PRODUCTS

MANUFACTURERS

Manufacturers: Subject to compliance with requirements, provide accessories by one of the following:

Public Toilet Room Accessories:
American Specialties, Inc.

Underlavatory Guards:
Brocar Products, Inc.
Truebro, Inc.

Products: Subject to compliance with requirements, provide one of the products indicated.

autotroph
architecture.planning.sustainable design consulting
617 B Paulin St. Santa Fe, NM 87505

MATERIALS

Stainless Steel: ASTM A 666, Type 304, with No. 4 finish (satin).

Galvanized Steel Mounting Devices: ASTM A 153/A 153M, hot-dip galvanized after fabrication.

Fasteners: Screws, bolts, and other devices of same material as accessory unit, tamper and theft resistant when exposed, and of galvanized steel when concealed.

EXECUTION

INSTALLATION

Install accessories according to manufacturers' written instructions, using fasteners appropriate to substrate indicated and recommended by unit manufacturer. Install units level, plumb, and firmly anchored in locations and at heights indicated.

Install grab bars to withstand a downward load of at least 250 lbf (1112 N), when tested according to method in ASTM F 446. Install solid blocking where necessary.

ADJUSTING AND CLEANING

Replace damaged or defective items.

Remove temporary labels and protective coatings.

Clean and polish exposed surfaces according to manufacturer's written recommendations.

PUBLIC TOILET ACCESSORY SCHEDULE

Grab Bar: ASI #3800 Series: Where this designation is indicated, provide stainless-steel grab bar complying with the following:

Grab Bar with Snap-On Flange Covers for concealed mounting shall be type 304 stainless steel alloy 18-8. Tubing shall be 1-1/2" diameter (Ø38) x 18 gauge [0.048"] (1.2). Snap-on cover shall be 22 gauge [0.03"] (0.8). Flange shall be 1/8" (3) thick and shall be Heliarc welded to tubing with a continuous concealed bead. End flanges shall have two (2) 3/8" diameter (Ø9.5) mounting holes. Center posts (if any) shall have (2) keyhole slots to ease installation access. All exposed surfaces shall have a satin finish and shall be protected during shipment with a plastic bag.

Grab Bars shall be designed to meet and exceed ADA requirements as published in CABO/ANSI A117.1 and 2010 ADA Accessibility Standards. Provide manufacturer's recommended fasteners.

Underlavatory Guard: Where this designation is indicated, provide under lavatory guard complying with the following:

Insulating Piping Coverings: White, antimicrobial, molded-vinyl covering for supply and drain piping assemblies intended for use at accessible lavatories to prevent direct contact with and burns from piping. Provide components as required for applications indicated with flip tops at valves that allow service access without removing coverings.

END OF SECTION 102800

PART 1 - GENERAL

RELATED DOCUMENTS

Drawings and general provisions of the Contract, including General and Supplementary Conditions and Division 1 Specification Sections, apply to this Section.

SUMMARY

This Section includes the following:

Range.
Range hood.
Refrigerator.
Hand dryers.

SUBMITTALS

Product Data: For each appliance type required indicating compliance with requirements. Include complete operating and maintenance instructions for each appliance.

QUALITY ASSURANCE

Electrical Appliances: Listed and labeled as defined in NFPA 70, Article 100, by a testing agency acceptable to authorities having jurisdiction.

UL and NEMA Compliance: Provide electrical components required as part of residential appliances that are listed and labeled by UL and that comply with applicable NEMA standards.

AHAM Standards: Provide appliances that comply with the following AHAM standards:

Refrigerators and Freezers: Total volume and shelf area ratings certified according to ANSI/AHAM HRF-1.

Regulatory Requirements, Accessibility: Where residential appliances are indicated to comply with accessibility requirements, comply with [the U.S. Architectural & Transportation Barriers Compliance Board's "Americans with Disabilities Act (ADA), Accessibility Guidelines for Buildings and Facilities (ADAAG)." ANSI A117.1., and FED-STD-795, "Uniform Federal Accessibility Standards."

Energy Ratings: Provide appliances that carry labels indicating energy-cost analysis (estimated annual operating costs) and efficiency information as required by the Federal Trade Commission.

Provide refrigerators that qualify for the EPA/DOE ENERGY STAR product labeling program.

DELIVERY

Deliver appliances only after utility rough-in is complete and construction in the spaces to receive appliances is substantially complete and ready for installation.

PART 2 - PRODUCTS

Available Manufacturers: Subject to compliance with requirements, manufacturers offering products that may be incorporated into the Work include, but are not limited to, the following:

Hand Dryer (Luisa Senior Center): TrimLine™ Surface-Mounted ADA Hand Dryer shall be B-7128 of Bobrick Washroom Equipment, Inc., Clifton Park, New York; Jackson, Tennessee; Los Angeles, California.

Surface-mounted hand dryer shall have either 22-gauge galvanized steel with exposed surface type-304 stainless steel with #4 satin-finish vertical grain (B-7128) covers with UL 94-5VA black plastic trim. Slim profile cover shall project no more than 4" from the finished face of wall to comply with accessible design guidelines. Unit shall be equipped with dual air outlets that provide a swirling circulation of air-flow for (less than 25 seconds) hand dry. Motor shall be 1/7 hp, universal type on resilient mounting with sealed ball bearing at drive-shaft end and self-lubricating sleeve bearing at nondrive end; equipped with automatic thermal-overload switch. Heating elements shall be located on outlet side of fan, shall heat air without hot spots, be inaccessible to vandals, and protected by an automatic thermal-overload switch. Electronic sensor shall automatically turn dryer on when hands are held under air-outlet opening and across path of sensor. Dryer shall turn off automatically when hands are removed. Sensor shall automatically shut dryer off approximately 1-1/2 minutes after dryer turns on if an inanimate object is placed across air-outlet opening. After inanimate object is removed, electronic sensor shall automatically reset itself and dryer shall operate normally. Unit shall be UL Listed. Unit shall be protected by a limited 10 -year warranty on all parts except motor brushes. Motor brushes shall be warranted for three years from date of purchase.

Electric Range (Villa Consuelo Senior Center): GE #JB450RFSS

Freestanding electric range
ADA compliant
All controls on front panel
Self - cleaning
5.0 cu. ft. oven capacity
Provide approved service cord
Color: Stainless Steel

Refrigerator/Freezer (Villa Consuelo Senior Center): GE #GTE18ISHSS

18.2 cu. ft.
Top Freezer
ADA Compliant
Energy Star compliant model
Color: Stainless Steel
Provide optional icemaker: IM4D

Exhaust Hood (Villa Consuelo Senior Center): Broan QP3 30" wide Undercabinet Range Hood.

Non-ducted: Provide CleanSense filters
Color: Stainless Steel
Switched at wall per electrical drawings and ADA requirements.

PART 3 - EXECUTION

EXAMINATION

Examine existing roughing-in for plumbing, and electrical services, with Installer present, to verify actual locations of services before appliance installation.

Proceed with installation only after unsatisfactory conditions have been corrected.

INSTALLATION

General: Comply with manufacturer's written instructions.

Utilities: Refer to Divisions 22 and 26 for plumbing and electrical requirements.

Built-in Equipment: Securely anchor units to supporting cabinets or countertops with concealed fasteners. Verify that clearances are adequate for proper functioning and rough openings are completely concealed.

Freestanding Equipment: Place units in final locations after finishes have been completed in each area. Verify that clearances are adequate to properly operate equipment. Provide and install anti-tip devices for freestanding ranges.

Install hand dryer per manufacturer's written instructions and at the height indicated for universal design.

ADJUSTING AND CLEANING

Test each item of the appliances to verify proper operation. Make necessary adjustments.

Verify that accessories required have been furnished and installed.

Remove packing material from appliances and leave units in clean condition, ready for operation.

END OF SECTION 113100

THIS PAGE INTENTIONALLY BLANK

PART 1 - GENERAL

RELATED DOCUMENTS

Drawings and general provisions of the Contract, including General and Supplementary Conditions and Division 1 Specification Sections, apply to this Section.

SUMMARY

This Section includes the following types of horizontal-fold shades and accessories:

Cellular shades.

Related Sections include the following:

Division 6 Section "Miscellaneous Carpentry" for wood blocking and grounds for mounting cellular shades and accessories.

DEFINITIONS

Cellular Shades: Pleated shades with more than one horizontally folded fabric layer forming accordion-folded fabric with enclosed air spaces or cells. Cellular shades may consist of two fabric layers forming a continuous accordion fold of enclosed air spaces or cells for a linear row of cells, one cell wide.

SUBMITTALS

Product Data: For each type of product indicated. Include styles, material descriptions, construction details, dimensions of individual components and profiles, features, finishes, and installation and operating instructions.

Samples for Initial Selection: For each colored component of each type of shade indicated.

Include similar Samples of accessories involving color selection.

Samples for Verification:

For the following products:

Shade Fabrics: Not less than 3 inches (80 mm) square, with specified treatments applied. Mark face of material.

Window Treatment Schedule: Include cellular shades in schedule using same room designations indicated on Drawings.

Product Certificates: For each type of cellular shade product, signed by product manufacturer.

Product Test Reports: For each type of cellular shade product.

Maintenance Data: For cellular shades to include in maintenance manuals. Include the following:

Methods for maintaining cellular shades and finishes.

Precautions about cleaning materials and methods that could be detrimental to fabrics, finishes, and performance.

Operating hardware.

QUALITY ASSURANCE

Source Limitations: Obtain cellular shades through one source from a single manufacturer.

Fire-Test-Response Characteristics: Provide cellular shades with the fire-test-response characteristics indicated, as determined by testing identical products per test method indicated below by UL or another testing and inspecting agency acceptable to authorities having jurisdiction. Identify materials with appropriate markings of applicable testing and inspecting agency:

Flame-Resistance Ratings: Passes NFPA 701.

Classified in accordance with ASTM E 84 as Class C: Flame spread index 76-200; smoke-developed index 0-450.

Corded Window Covering Product Standard: Provide cellular shades complying with WCMA A 100.1.

DELIVERY, STORAGE, AND HANDLING

Deliver shades in factory packages, marked with manufacturer and product name, fire-test-response characteristics, and location of installation using same room designations indicated on Drawings and in a window treatment schedule.

PROJECT CONDITIONS

Environmental Limitations: Do not install cellular shades until construction and wet and dirty finish work in spaces, including painting, is complete and ambient temperature and humidity conditions are maintained at the levels indicated for Project when occupied for its intended use.

Field Measurements: Where cellular shades are indicated to fit to other construction, verify dimensions of other construction by field measurements before fabrication and indicate measurements on Shop Drawings. Allow clearances for operable glazed units' operation hardware throughout the entire operating range. Notify Architect of discrepancies. Coordinate fabrication schedule with construction progress to avoid delaying the Work.

PART 2 - PRODUCTS

MANUFACTURERS

Basis-of-Design Product: Subject to compliance with requirements, provide Graber Graber CrystalPleat® Cellular Shades in semi-opaque fabric, or an approved comparable product by one of the following:

Comfortex Window Fashions.
Hunter Douglas Window Fashions.
Levolor Contract; a Newell Company; Levolor.
Springs Window Fashions Division, Inc.; Graber.
Verosol USA, Inc.

Cellular Shade Construction: Two-fabric thicknesses and one row of cells, one cell wide.

Nominal Cell Width 3/4”

Shade Fabric: Manufacturer's standard semi-opaque fabric. stain and fade resistant, width as wide as required for seamless shade.

Headrail: Formed steel or extruded aluminum; long edges returned or rolled; fully enclosing operating mechanisms on three sides and ends; capacity for one shade per headrail.

Bottom Rail: Formed-steel or extruded-aluminum tube, sealed with plastic or metal capped ends.

Mounting: Inset into window, head mounted.

Shade Operation: Manual; with lift cord, crash-proof cord lock, and cord joiner ball.

PART 3 - EXECUTION

EXAMINATION

Examine substrates, areas, and conditions, with Installer present, for compliance with requirements for installation tolerances, operational clearances, and other conditions affecting performance. Proceed with installation only after unsatisfactory conditions have been corrected.

CELLULAR SHADE INSTALLATION

Install shades level and plumb, according to manufacturer's written instructions, and located so pleat edges are not closer than 1½ inches to interior face of glass. Install intermediate support as required to prevent deflection in headrail. Allow clearances for window operation hardware.

Flush Mounted: Install shades with pleat edges flush with finish face of opening if shade is in fully lowered position.

ADJUSTING

Adjust cellular shades to operate smoothly, easily, safely, and free from binding or malfunction throughout entire operational range.

CLEANING AND PROTECTION

Clean shade surfaces after installation, according to manufacturer's written instructions.

Provide final protection and maintain conditions, in a manner acceptable to manufacturer and Installer that ensure that cellular shades are without damage or deterioration at time of Substantial Completion.

Replace damaged shades that cannot be repaired, in a manner approved by Architect, before time of Substantial Completion.

END OF SECTION 122416

THIS PAGE INTENTIONALLY BLANK

PART 1 - GENERAL

RELATED DOCUMENT S

Drawings and general provisions of the Contract, including General and Supplementary Conditions and Division 1 Specification Sections, apply to this Section.

SUMMARY

This Section includes the following:

Wood treatment with borate.

Related Sections include the following:

Division 6 Section "Miscellaneous Carpentry" for wood preservative treatment by pressure process.

REFERENCES

General: Standards listed by reference, including revisions by issuing authority, form a part of this specification section to the extent indicated. Standards listed are identified by issuing authority, authority abbreviation, designation number, title or other designation established by issuing authority. Standards subsequently referenced herein are referred to by issuing authority abbreviation and standard designation.

American Wood-Preservers' Association (AWPA); AWPA Standard M4-01: Standard for the Care of Preservative-Treated Wood Products; 2001.

Requires that a preservative be applied to any end cut to protect exposed wood not protected by pressure treatment (as in sill plates) to meet international building code requirements.

SUBMITTALS

Product Data: For borate.

Include the EPA-Registered Label for borate products.

Product Certificates: For termite control products, signed by product manufacturer.

Qualification Data: For Installer of termite control products.

Wood Treatment Application Report: After application of borate is completed, submit report for Owner's record information, including the following:

Date and time of application.
Brand name and manufacturer of borate.
Quantity of undiluted borate used.
Dilutions, methods, volumes, and rates of application used.
Areas of application.
Areas not accessible.

Warranty: Special warranty specified in this Section.

QUALITY ASSURANCE

Installer Qualifications: A specialist who is licensed according to regulations of authorities having jurisdiction to apply termite control treatment and products in jurisdiction where Project is located.

Regulatory Requirements: Formulate and apply termiticides according to the EPA-Registered Label.

Source Limitations: Obtain termite control products through one source from a single manufacturer for each product.

Pre-installation Conference: Conduct conference at Project site.

COORDINATION

Coordinate application of termiticide treatment of structure with access to all structural wood members and foundations. Install termiticide during the dried in phase after all structural framing and sheathing is in place and prior to installation of drywall, insulation, mechanical systems and electrical wiring.

WARRANTY

Special Warranty: Manufacturer's standard form, signed by Applicator and Contractor certifying that termite control work, consisting of applied soil termiticide treatment, will prevent infestation of subterranean termites. If subterranean termite activity or damage is discovered during warranty period, re-treat soil and repair or replace damage caused by termite infestation.

Warranty Period: Five years from date of Substantial Completion.

PART 2 - PRODUCTS

MANUFACTURERS

Available Manufacturers: Subject to compliance with requirements, manufacturers offering products that may be incorporated into the Work include, but are not limited to, the following:

Manufacturer: Nisus Corporation, 100 Nisus Drive, Rockford TN 37853, 1-800-264-0870

Proprietary Product/System: Bora-Care Termiticide, Insecticide and Fungicide

Termiticide requirements:

Bora-Care is an EPA-registered primary termiticide treatment that complies with requirements of authorities having jurisdiction over such an application.

Bora-Care will be provided in a concentrated formulation that dilutes with water or foaming agent.

Bora-Care is registered by label as a primary treatment to prevent termite infestation.

Provide quantity required for application at the label volume and rate for the maximum termiticide concentration allowed for each specific use according to the Bora-Care's EPA registered label.

PART 3 - EXECUTION

EXAMINATION

Examine substrates, areas, and conditions, with Applicator present, for compliance with requirements for moisture content of soil, interfaces with earthwork, slab and foundation work, landscaping, and other conditions affecting performance of termite control.

Proceed with application only after unsatisfactory conditions have been corrected.

PREPARATION

General: Comply with the most stringent requirements of authorities having jurisdiction and with manufacturer's written instructions for preparation before beginning application of termite control treatment. Remove all extraneous sources of wood cellulose and other edible materials such as wood debris, tree stumps and roots, stakes, formwork, and construction waste wood from soil within and around foundations.

APPLICATION, GENERAL

General: Comply with the most stringent requirements of authorities having jurisdiction and with manufacturer's EPA-Registered Label for products.

APPLYING BORATE TREATMENT

Application: Mix wood treatment borate solution to a uniform consistency. Provide quantity required for application at the label volume and rate for the maximum specified concentration of borate, according to manufacturer's EPA-Registered Label, so that wood framing, sheathing, siding, and structural members subject to infestation receive treatment.

Site Preparation: Remove foreign matter that could decrease thoroughness of treatment, such as sawdust, away from treatment surfaces. Move building materials that block or prevent product application to required treatment areas.

Application Rates: Apply Bora-Care treatment by label directions to include:

The treatment of all structural wood and sill plates within 36 inches of contact with the foundation. Apply a second application to wood within treated area when only one or two surfaces are exposed.

The treatment of all cellulosic sheathing within 36 inches of the foundation.

The treatment of the concrete slab a minimum of 2 inches out from the wooden sill plate.

The treatment of all pipe and plumbing penetrations with the treatment solution to a height of two feet and extending at least 6 inches out horizontally from the penetration onto slab surface.

Treat abutting slab areas and expansion joints to cover at least six inches of slab surface out from each side of joint or abutting slab connection.

END OF SECTION 313116

THIS PAGE INTENTIONALLY BLANK

PART 1 GENERAL

SUMMARY

Section Includes:

Plumbing Basic Requirements specifically applicable to Divisions 21, 22, and 23 in addition to the requirements of Division 1 - General Requirements and the General Conditions of the Contract.

Electric motors.

Plumbing Identification.

Sleeves

Plumbing sleeve seals.

Altitude rating.

RELATED SECTIONS

Work described in this section is related to other work described in Divisions 21, 22, 23, 27, and 28 and may be related to work in other Divisions concerning structure or appearances. Review and become familiar with work required in other Sections in this Division and with work required in the other Divisions. Coordinate with other subcontractor(s) to assure that all issues arising between related Sections are resolved.

Bring to the attention of the Engineer prior to the cutoff date for Addenda, any and all discrepancies in related work. Submission of a bid or proposal indicates that all costs for this work and related work are included in the bid for this work or within the bid or proposal for the related work.

SYSTEM DESCRIPTION

Provide complete and fully operational systems with facilities and services to meet requirements indicated and in accordance with applicable codes and ordinances.

REGULATORY REQUIREMENTS

All Plumbing work shall be performed in strict accordance with the New Mexico Building Codes, IBC, UPC, UMC, NFPA, National Gas Code, Model Energy Code, and all applicable provisions of the local authorities having jurisdiction. All materials and labor necessary to comply with rules, regulations, and ordinances shall be provided. Where the drawings and/or specifications indicate material or construction in excess of code requirements or visa-versa, the more stringent application shall govern.

SUBMITTALS

Submit all data as a single package, as the Engineer will commence review only when all data has been received.

Submittal form to identify project, contractor, sub-contractor, supplier, and pertinent contract document references.

Apply Contractor's stamp, signed or initialed, certifying that review, verification of products required, field dimensions, adjacent construction work, and coordination of information is in accordance with the requirements of the work and contract documents.

The Contractor shall determine and verify field measurements and field construction criteria for conformance with drawings and specifications and for conflicts with other items of construction, past or present. He shall coordinate each submittal with the requirements of the work and of the contract documents and notify the Engineer in writing, at the time of the submission, of any and all deviations in the submittals from requirements of the work and contract documents.

No fabrication or work, which requires submittals, shall begin until submittals are returned with the Engineer's approval.

Identify variations for contract documents and product or system limitations, which may be detrimental to successful performance of the completed work.

Engineer's review does not constitute acceptance or responsibility for accuracy or dimensions, nor shall it relieve the Contractor from meeting any requirements of the work and contract documents, nor shall it constitute approval for any deviation from the contract documents, unless such deviations are specifically stated as such on the submittal and specifically allowed by the Engineer by specific written notification for each such variation. The Engineer's review will not relieve the Contractor from responsibility for errors or omissions in the shop drawings.

Revise and resubmit submittals as required. Identify all changes made since previous submittal.

SUBSTITUTIONS

Prior approval of materials and equipment will not be considered. Contract documents indicate specified equipment and acceptable alternatives. Any other equipment/material proposed must meet or exceed that specified. Equipment/material will be reviewed for compliance during submittal review process per Paragraph 1.5.

Engineer will consider requests for substitutions only at submittal review. Clearly identify substitution.

Document each request with complete data substantiating compliance of proposed substitution with contract documents.

A request for substitution constitutes a representation that the Contractor:

- Has investigated the proposed product and determined that it meets or exceeds the quality level of the specified product.
- Will provide the same warranty for the substitution as for the specified product.
- Will coordinate installation and make changes to other work, which may be required for the work to be complete with no additional cost to Owner.
- Waives claims for additional costs or time extensions which may, subsequently, become apparent.
- Will reimburse Owner and Architect/Engineer for review or redesign services associated with re-approval by authorities.

DELIVERY, STORAGE, AND HANDLING

In accordance with the requirements of Division 1.

PART 2 PRODUCTS

ELECTRIC MOTORS

Motors shall be of sufficient size for the duty to be performed and shall not exceed their full-rated load when the driven equipment is operating at specified capacity under the most severe conditions likely to be encountered.

Each motor shall be of the horsepower specified and suitable for operation at the elevation of the job site as scheduled on the drawings.

Motors shall conform to NEMA standards, applicable to IEEE Standards and ASA C50 Standards, and shall be suitable for direct coupling mounting or V-belt mounting in accordance with the drawings.

Motors controlled by variable frequency drives/adjustable frequency drives, “VFD/AFD”, shall be rated for use on “VFD/AFD” controllers.

PLUMBING IDENTIFICATION

Equipment Nameplates: Laminated three-layer plastic with engraved black letters on light background color.

Valve Tags: Laminated three-layer plastic with engraved black letters on light background color, minimum 1-1/2 inches diameter.

Piping:

- Conform to ASME A13.1.
- Minimum information indicating flow direction arrow and identification of fluid being conveyed.

Plastic Pipe Markers: Factory fabricated, flexible, semi-rigid plastic, preformed to fit around pipe or pipe covering. Larger sizes may have maximum sheet size with spring fastener.

Plastic Tape Pipe Markers: Flexible, vinyl film tape with pressure sensitive adhesive backing and printed markings.

Plastic Underground Pipe Markers: Bright colored continuously printed plastic ribbon tape, minimum 6 inches wide by 4 mil thick, manufactured for direct burial service.

SLEEVES

Sleeves for pipes through non-fire rated floors: 18 gage thick galvanized steel.

Sleeves for pipes through non-fire rated beams, walls, footings, and potentially wet floors: steel pipe or 18 gage thick galvanized steel.

Sleeves for round ductwork: galvanized steel.

Sleeves for rectangular ductwork: galvanized steel or wood.

Sealant: acrylic.

PLUMBING SLEEVE SEALS

Modular Plumbing type, consisting of interlocking synthetic rubber links shaped to continuously fill annular space between object and sleeve, connected with bolts and pressure plates causing rubber sealing elements to expand when tightened, providing watertight seal and electrical insulation.

ALTITUDE RATINGS

Unless otherwise noted, all specified equipment capacities, air quantities, etc., are for the altitude of the job site, as scheduled on the drawings, and adjustments to manufacturer's ratings must be made accordingly.

ACCESS PANELS

Install wall and ceiling access panels for access to valves and water hammer arrestors in plumbing walls or above hard ceiling. Coordinate location with architect.

PART 3 EXECUTION

INSTALLATION - IDENTIFICATION

Install materials in accordance with manufacturer's instructions.

Degrease and clean surfaces to receive adhesive for identification materials.

Install plastic nameplates with adhesive.

Install plastic tags with corrosion-resistant metal chain.

Install underground plastic pipe markers 6 to 8 inches below finished grade, directly above buried pipe.

Label piping at all changes in direction and at a minimum of every 20 feet of straight runs of pipe.

Record actual location of valves on Project Record Documents.

INSTALLATION - CONDENSATE AND OVERFLOW DRAINS

Install condensate and overflow drain piping from all mechanical equipment drain points. Extend and terminate per UPC/UMC.

INSTALLATION - SLEEVES

Verify openings are ready to receive sleeves.

Exterior watertight entries: Seal with Plumbing sleeve seals.

Set sleeves in position in forms. Provide reinforcing around sleeves.

Size sleeves large enough to allow for movement due to expansion and contraction. Provide for continuous insulation wrapping.

Extend sleeves through floors 1 inch above finished floor level. Caulk sleeves.

Where piping or ductwork penetrates floor, ceiling, or wall, close off space between pipe or duct and adjacent work with firestopping insulation and caulk airtight. Provide close fitting metal collar or escutcheon covers at both sides of penetration.

Install chrome plated steel or, if allowed by the authority having jurisdiction, plastic escutcheons at finished surfaces.

EXISTING SERVICES

The Contractor shall carefully examine the drawings and specifications, visit the site of the work, be fully informed as to all existing conditions, dimensions, and limitations before starting work.

If existing active or non-active services, which are not shown on plans, are encountered which require relocation or disconnection, the Contractor shall notify the Engineer for a decision on proper handling of these services. The Contractor shall not proceed with the work until so authorized.

EXCAVATION AND BACKFILL OF TRENCHES

All excavation, trenching, and backfilling, as required for the Plumbing installation, shall be provided by the Contractor.

All piping laid in trenches shall be bedded evenly and firmly. The trench bed shall consist of undisturbed native soil or shall be compacted to an equally firm bedding. Recesses shall be formed below the trench bed to receive the flange or hub off each section of pipe or fitting.

Where firm bedding is not obtainable, sand or gravel fill, compacted with water or low strength concrete fill around the bottom half of the pipe, shall be used.

Backfill all trenches as soon as possible after inspection. Spread backfill in layers, not to exceed 8 inches, and compact each layer to ninety-five percent (95%) of maximum density based on Modified Proctor Density, in such areas as streets, driveways, alleys, or walks to prevent settling. Backfill shall be neither excessively wet or dry. Puddling or flooding shall not be used, except in sand or gravel-bearing soil, and as specifically approved. Street cuts shall be made 8 inches wider than required trenches and shall be repaired to match the finish surface of the street and be flush with existing grades.

Use plastic underground pipe markers for all buried piping.

PAINTING

Surfaces of all equipment and material shall be thoroughly cleaned and left ready for painting.

Painting shall be performed according to other specifications in these contract documents.

ELECTRICAL WIRING AND CONTROL EQUIPMENT

All motor starters, disconnects overload protection equipment, and low voltage control equipment and wiring specified under this Division will be the responsibility of this Contractor. Installation of line voltage components and wiring specified under this Division will be the responsibility of the electrical contractor. Purchase and installation of low voltage components and wiring specified under this Division will be this Contractor's responsibility.

The Plumbing contractor must coordinate with the electrical contractor on the division of responsibility pertaining to the purchase and installation of electrical control components. Any changes or additions required due to the specific nature of equipment furnished shall be the complete responsibility of the Contractor furnishing the equipment.

All electrical work performed under this Division will be in compliance with the NEC and all applicable city and state ordinances. All controllers furnished with Plumbing equipment shall have overload protection on all phases.

The Plumbing contractor must coordinate with the electrical contractor to ensure that all required components of control work are included and fully understood. No additional costs shall accrue to the Owner as a result of lack of such coordination.

SUBSTANTIAL COMPLETION AND FINAL INSPECTION REQUIREMENTS

Before substantial completion can be granted, the following items must be completed and submitted to the Owner/Engineer:

An approved Test and Balance Report.
Operation test demonstrating proper operation of all equipment.
Control diagrams, wiring diagrams, control sequences, and engineering data on components.

Prior to the final inspection or consideration of final payment, the Contractor shall:

Provide copies of permits, operating permits, and/or inspection certificates.
Provide a check-out report.

Provide operating and maintenance manual(s).

Provide record as-built drawings.
Return keys to the Owner.
Deliver all spare parts.
Touch up any damaged finishes.
Provide a copy of attendance roster for equipment training sessions.
Provide all warrantee certificates and documentation.

END OF SECTION

THIS PAGE INTENTIONALLY BLANK

PART 1 GENERAL

SECTION INCLUDES

Piping insulation.

Jackets and accessories.

REFERENCE STANDARDS

ASTM B209 - Standard Specification for Aluminum and Aluminum-Alloy Sheet and Plate.

ASTM B209M - Standard Specification for Aluminum and Aluminum-Alloy Sheet and Plate [Metric].

ASTM C177 - Standard Test Method for Steady-State Heat Flux Measurements and Thermal Transmission Properties by Means of the Guarded Hot Plate Apparatus.

ASTM C547 - Standard Specification for Mineral Fiber Pipe Insulation.

ASTM C795 - Standard Specification for Thermal Insulation for Use in Contact with Austenitic Stainless Steel.

ASTM E84 - Standard Test Method for Surface Burning Characteristics of Building Materials.

ASTM E96/E96M - Standard Test Methods for Water Vapor Transmission of Materials.

NFPA 255 - Standard Method of Test of Surface Burning Characteristics of Building Materials; National Fire Protection Association.

UL 723 - Standard for Test for Surface Burning Characteristics of Building Materials; Underwriters Laboratories Inc..

SUBMITTALS

See Section 22 05 00 - Basic Plumbing Materials and Methods, for submittal procedures.

Product Data: Provide product description, thermal characteristics, list of materials and thickness for each service, and locations.

Manufacturer's Instructions: Indicate installation procedures that ensure acceptable workmanship and installation standards will be achieved.

QUALITY ASSURANCE

Manufacturer Qualifications: Company specializing in manufacturing the Products specified in this section with not less than three years of documented experience.

DELIVERY, STORAGE, AND HANDLING

Accept materials on site, labeled with manufacturer's identification, product density, and thickness.

FIELD CONDITIONS

Maintain ambient conditions required by manufacturers of each product.

Maintain temperature before, during, and after installation for minimum of 24 hours.

PART 2 PRODUCTS

REQUIREMENTS FOR ALL PRODUCTS OF THIS SECTION

Surface Burning Characteristics: Flame spread/Smoke developed index of 25/50, maximum, when tested in accordance with ASTM E84, NFPA 255, or UL 723.

GLASS FIBER

Manufacturers:

- Knauf Insulation: www.knaufusa.com.
- Johns Manville Corporation: www.jm.com.

Owens Corning Corp: www.owenscorning.com.

Insulation: ASTM C547 and ASTM C795; rigid molded, noncombustible.

'K' value: ASTM C177, 0.24 at 75 degrees F.

Maximum service temperature: 850 degrees F.

Maximum moisture absorption: 0.2 percent by volume.

Insulation: ASTM C547 and ASTM C795; semi-rigid, noncombustible, end grain adhered to jacket.

'K' value: ASTM C177, 0.24 at 75 degrees F.

Maximum service temperature: 650 degrees F.

Maximum moisture absorption: 0.2 percent by volume.

Vapor Barrier Jacket: White Kraft paper with glass fiber yarn, bonded to aluminized film; moisture vapor transmission when tested in accordance with ASTM E96/E96M of 0.02 perm-inches.

Vapor Barrier Lap Adhesive:

Compatible with insulation.

JACKETS

PVC Plastic.

Jacket: One piece molded type fitting covers and sheet material, off-white color.

Minimum Service Temperature: 0 degrees F.

Maximum Service Temperature: 150 degrees F.

Moisture Vapor Permeability: 0.002 perm inch, maximum, when tested in accordance with ASTM E96/E96M.

Thickness: 10 mil.

Connections: Brush on welding adhesive.

Aluminum Jacket: ASTM B209 (ASTM B209M) formed aluminum sheet.

Thickness: 0.016 inch sheet.

Finish: Smooth.

Joining: Longitudinal slip joints and 2 inch laps.

Fittings: 0.016 inch thick die shaped fitting covers with factory attached protective liner.

PART 3 EXECUTION

EXAMINATION

Verify that piping has been tested before applying insulation materials.

Verify that surfaces are clean and dry, with foreign material removed.

INSTALLATION

Install in accordance with manufacturer's instructions.

Install in accordance with NAIMA National Insulation Standards.

Exposed Piping: Locate insulation and cover seams in least visible locations.

Insulated pipes conveying fluids below ambient temperature: Insulate entire system including fittings, valves, unions, flanges, strainers, flexible connections, pump bodies, and expansion joints.

Glass fiber insulated pipes conveying fluids below ambient temperature:

Provide vapor barrier jackets, factory-applied or field-applied. Secure with self-sealing longitudinal laps and butt strips with pressure sensitive adhesive. Secure with outward clinch expanding staples and vapor barrier mastic.

Insulate fittings, joints, and valves with molded insulation of like material and thickness as adjacent pipe. Finish with glass cloth and vapor barrier adhesive or PVC fitting covers.

For hot piping conveying fluids 140 degrees F or less, do not insulate flanges and unions at equipment, but bevel and seal ends of insulation.

Glass fiber insulated pipes conveying fluids above ambient temperature:

Provide standard jackets, with or without vapor barrier, factory-applied or field-applied. Secure with self-sealing longitudinal laps and butt strips with pressure sensitive adhesive. Secure with outward clinch expanding staples.

Insulate fittings, joints, and valves with insulation of like material and thickness as adjoining pipe. Finish with glass cloth and adhesive or PVC fitting covers.

Inserts and Shields:

Application: Piping 1-1/2 inches diameter or larger.

Shields: Galvanized steel between pipe hangers or pipe hanger rolls and inserts.

Insert location: Between support shield and piping and under the finish jacket.

Insert configuration: Minimum 6 inches long, of same thickness and contour as adjoining insulation; may be factory fabricated.

Insert material: Hydrous calcium silicate insulation or other heavy density insulating material suitable for the planned temperature range.

Pipe Exposed in Mechanical Equipment Rooms or Finished Spaces (less than 10 feet above finished floor): Finish with PVC jacket and fitting covers.

SCHEDULES

Plumbing Systems:

Domestic Hot Water Supply:

Glass Fiber Insulation:

Pipe Size Range: 1-3 inch.

Thickness: 1 inch.

Domestic Hot Water Recirculation:

Glass Fiber Insulation:

Pipe Size Range: All sizes.

Thickness: 1 inch.

END OF SECTION

THIS PAGE INTENTIONALLY BLANK

PART 1 GENERAL

SECTION INCLUDES

Pipe, pipe fittings, valves, and connections for piping systems.

Sanitary sewer.

Domestic water.

Gas.

REFERENCE STANDARDS

ANSI Z21.22 - American National Standard for Relief Valves and Automatic Gas Shutoff Devices for Hot Water Supply Systems.

ASME B16.3 - Malleable Iron Threaded Fittings: Classes 150 and 300; The American Society of Mechanical Engineers.

ASME B16.18 - Cast Copper Alloy Solder Joint Pressure Fittings; The American Society of Mechanical Engineers; 2012 (ANSI B16.18).

ASME B16.22 - Wrought Copper and Copper Alloy Solder Joint Pressure Fittings; The American Society of Mechanical Engineers.

ASME B31.1 - Power Piping; The American Society of Mechanical Engineers; 2012 (ANSI/ASME B31.1).

ASME B31.9 - Building Services Piping; The American Society of Mechanical Engineers; 2011 (ANSI/ASME B31.9).

ASME (BPV IV) - Boiler and Pressure Vessel Code, Section IV - Rules for Construction of Heating Boilers; The American Society of Mechanical Engineers.

ASME (BPV IX) - Boiler and Pressure Vessel Code, Section IX - Welding and Brazing Qualifications; The American Society of Mechanical Engineers.

ASTM A53/A53M - Standard Specification for Pipe, Steel, Black and Hot-Dipped, Zinc-Coated, Welded and Seamless.

ASTM A74 - Standard Specification for Cast Iron Soil Pipe and Fittings.

ASTM A123/A123M - Standard Specification for Zinc (Hot-Dip Galvanized) Coatings on Iron and Steel Products.

ASTM A234/A234M - Standard Specification for Piping Fittings of Wrought Carbon Steel and Alloy Steel for Moderate and High Temperature Service.

ASTM B32 - Standard Specification for Solder Metal.

ASTM B42 - Standard Specification for Seamless Copper Pipe, Standard Sizes.

ASTM B88 - Standard Specification for Seamless Copper Water Tube.

ASTM B88M - Standard Specification for Seamless Copper Water Tube (Metric).

ASTM C564 - Standard Specification for Rubber Gaskets for Cast Iron Soil Pipe and Fittings.

ASTM D2564 - Standard Specification for Solvent Cements for Poly(Vinyl Chloride) (PVC) Plastic Piping Systems.

ASTM D2665 - Standard Specification for Poly(Vinyl Chloride) (PVC) Plastic Drain, Waste, and Vent Pipe and Fittings.

ASTM D2729 - Standard Specification for Poly(Vinyl Chloride) (PVC) Sewer Pipe and Fittings.

ASTM D2855 - Standard Practice for Making Solvent-Cemented Joints with Poly(Vinyl Chloride) (PVC) Pipe and Fittings.

ASTM D3034 - Standard Specification for Type PSM Poly(Vinyl Chloride) (PVC) Sewer Pipe and Fittings.

ASTM F477 - Standard Specification for Elastomeric Seals (Gaskets) for Joining Plastic Pipe.

AWWA C105/A21.5 - Polyethylene Encasement for Ductile-Iron Pipe Systems; American Water Works Association; 2010 (ANSI/AWWA C105/A21.5).

AWWA C651 - Disinfecting Water Mains; American Water Works Association; 2005 (ANSI/AWWA C651).

CISPI 301 - Standard Specification for Hubless Cast Iron Soil Pipe and Fittings for Sanitary and Storm Drain, Waste and Vent Piping Applications; Cast Iron Soil Pipe Institute.

CISPI 310 - Specification for Coupling for Use in Connection with Hubless Cast Iron Soil Pipe and Fittings for Sanitary and Storm Drain, Waste, and Vent Piping Applications; Cast Iron Soil Pipe Institute

MSS SP-58 - Pipe Hangers and Supports - Materials, Design, Manufacture, Selection, Application, and Installation; Manufacturers Standardization Society of the Valve and Fittings Industry, Inc..

MSS SP-70 - Cast Iron Gate Valves, Flanged and Threaded Ends; Manufacturers Standardization Society of the Valve and Fittings Industry, Inc..

MSS SP-71 - Cast Iron Swing Check Valves, Flanged and Threaded Ends; Manufacturers Standardization Society of the Valve and Fittings Industry, Inc..

MSS SP-80 - Bronze Gate, Globe, Angle and Check Valves; Manufacturers Standardization Society of the Valve and Fittings Industry, Inc..

MSS SP-85 - Cast Iron Globe & Angle Valves, Flanged and Threaded Ends; Manufacturers Standardization Society of the Valve and Fittings Industry, Inc..

MSS SP-110 - Ball Valves Threaded, Socket-Welding, Solder Joint, Grooved and Flared Ends; Manufacturers Standardization Society of the Valve and Fittings Industry, Inc..

NFPA 58 - Liquefied Petroleum Gas Code; National Fire Protection Association.

NSF 61 - Drinking Water System Components - Health Effects.

NSF 372 - Drinking Water System Components - Lead Content.

SUBMITTALS

See Section 22 05 00 - Basic Plumbing Materials and Methods, for submittal procedures.

Product Data: Provide data on pipe materials, pipe fittings, valves, and accessories. Provide manufacturers catalog information. Indicate valve data and ratings.

Shop Drawings: For non-penetrating rooftop supports, submit detailed layout developed for this project, with design calculations for loadings and spacings.

Project Record Documents: Record actual locations of valves.

Maintenance Materials: Furnish the following for Owner's use in maintenance of project.

Valve Repacking Kits: One for each type and size of valve.

QUALITY ASSURANCE

Perform work in accordance with applicable codes.

Valves: Manufacturer's name and pressure rating marked on valve body.

Welding Materials and Procedures: Conform to ASME (BPV IX) and applicable state labor regulations.

Welder Qualifications: Certified in accordance with ASME (BPV IX).

Identify pipe with marking including size, ASTM material classification, ASTM specification, potable water certification, water pressure rating.

DELIVERY, STORAGE, AND HANDLING

Accept valves on site in shipping containers with labeling in place. Inspect for damage.

Provide temporary protective coating on cast iron and steel valves.

Provide temporary end caps and closures on piping and fittings. Maintain in place until installation.

Protect piping systems from entry of foreign materials by temporary covers, completing sections of the work, and isolating parts of completed system.

FIELD CONDITIONS

Do not install underground piping when bedding is wet or frozen.

PART 2 PRODUCTS

SANITARY SEWER PIPING, BURIED BEYOND 5 FEET OF BUILDING

PVC Pipe: ASTM D3034 SDR 35.

Fittings: PVC.

Joints: Push-on, using ASTM F477 elastomeric gaskets.

Trace Wire: Refer to Section 33 31 11.

SANITARY SEWER PIPING, BURIED WITHIN 5 FEET OF BUILDING

Cast Iron Pipe: ASTM A74 extra heavy weight.

Fittings: Cast iron.

Joints: Hub-and-spigot, CISPI HSN compression type with ASTM C564 neoprene gaskets or lead and oakum.

Cast Iron Pipe: CISPI 301, hubless.

Fittings: Cast iron.

Joints: CISPI 310, neoprene gasket and stainless steel clamp and shield assemblies.

PVC Pipe: ASTM D2665 or ASTM D3034.

Fittings: PVC.

Joints: Solvent welded, with ASTM D2564 solvent cement.

SANITARY SEWER PIPING, ABOVE GRADE

Cast Iron Pipe: ASTM A74, service weight.

Fittings: Cast iron.

Joint Seals: ASTM C564 neoprene gaskets, or lead and oakum.

Cast Iron Pipe: CISPI 301, hubless, service weight.

Fittings: Cast iron.

Joints: CISPI 310, neoprene gaskets and stainless steel clamp-and-shield assemblies.

PVC Pipe: ASTM D2729.

Fittings: PVC.

Joints: Solvent welded, with ASTM D2564 solvent cement.

WATER PIPING, BURIED BEYOND 5 FEET OF BUILDING

Copper Pipe: ASTM B42, hard drawn.

Fittings: ASME B16.18, cast copper alloy or ASME B16.22 wrought copper and bronze.

Joints: ASTM B 32, alloy Sn95 solder.

WATER PIPING, BURIED WITHIN 5 FEET OF BUILDING

Copper Pipe (Cold or Hot Domestic Water): ASTM B42, hard drawn.

Fittings: ASME B16.18, cast copper alloy or ASME B16.22 wrought copper and bronze.

Joints: ASTM B 32, alloy Sn95 solder.

WATER PIPING, ABOVE GRADE

Copper Tube: ASTM B88 (ASTM B88M), Type K (A), Drawn (H).

Fittings: ASME B16.18, cast copper alloy or ASME B16.22, wrought copper and bronze.

Joints: ASTM B32, alloy Sn95 solder.

Mechanical Press Sealed Fittings: Double pressed type, NSF 61 and NSF 372 approved or certified, utilizing EPDM, non toxic synthetic rubber sealing elements.

STORM WATER PIPING, BURIED BEYOND 5 FEET OF BUILDING

Cast Iron Pipe: ASTM A74 service weight.

Fittings: Cast iron.

Joint Seals: ASTM C564 neoprene gaskets, or lead and oakum.

STORM WATER PIPING, BURIED WITHIN 5 FEET OF BUILDING

Cast Iron Pipe: ASTM A74 service weight.

Fittings: Cast iron.

Joint Seals: ASTM C564 neoprene gaskets, or lead and oakum.

STORM WATER PIPING, ABOVE GRADE

Cast Iron Pipe: ASTM A74 service weight.

Fittings: Cast iron.

Joint Seals: ASTM C564 neoprene gaskets, or lead and oakum.

PROPANE GAS PIPING, BURIED BEYOND 5 FEET OF BUILDING

Steel Pipe: ASTM A53/A53M Schedule 40 black.

Fittings: ASTM A234/A234M, wrought steel welding type, with AWWA C105/A21.5 polyethylene jacket or double layer, half-lapped 10 mil polyethylene tape.

Joints: ASME B31.1, welded.

PROPANE GAS PIPING, BURIED WITHIN 5 FEET OF BUILDING

Steel Pipe: ASTM A53/A53M Schedule 40 black.

Fittings: ASTM A234/A234M, wrought steel welding type, with AWWA C105/A21.5 polyethylene jacket or double layer, half-lapped 10 mil polyethylene tape.

Joints: ASME B31.1, welded.

PROPANE GAS PIPING, ABOVE GRADE

Steel Pipe: ASTM A53/A53M Schedule 40 black.

Fittings: ASME B16.3, malleable iron, or ASTM A234/A234M, wrought steel welding type.

Joints: NFPA 58, threaded or welded to ASME B31.1.

FLANGES, UNIONS, AND COUPLINGS

Unions for Pipe Sizes 3 Inches and Under:

Ferrous pipe: Class 150 malleable iron threaded unions.

Copper tube and pipe: Class 150 bronze unions with soldered joints.

Flanges for Pipe Size Over 1 Inch:

Ferrous pipe: Class 150 malleable iron threaded or forged steel slip-on flanges; preformed neoprene gaskets.

Copper tube and pipe: Class 150 slip-on bronze flanges; preformed neoprene gaskets.

Mechanical Couplings for Grooved and Shouldered Joints: Two or more curved housing segments with continuous key to engage pipe groove, circular C-profile gasket, and bolts to secure and compress gasket.

Dimensions and Testing: In accordance with AWWA C606.

Housing Material: Malleable iron or ductile iron, galvanized.

Gasket Material: EPDM suitable for operating temperature range from -30 degrees F to 230 degrees F.

Bolts and Nuts: Hot dipped galvanized or zinc-electroplated steel.

When pipe is field grooved, provide coupling manufacturer's grooving tools.

Dielectric Connections: Union with galvanized or plated steel threaded end, copper solder end, water impervious isolation barrier.

PIPE HANGERS AND SUPPORTS

Provide hangers and supports that comply with MSS SP-58.

If type of hanger or support for a particular situation is not indicated, select appropriate type using MSS SP-58 recommendations.

Overhead Supports: Individual steel rod hangers attached to structure or to trapeze hangers.

Trapeze Hangers: Welded steel channel frames attached to structure.

Vertical Pipe Support: Steel riser clamp.

Floor Supports: Concrete pier or steel pedestal with floor flange; fixture attachment.

Rooftop Supports for Low-Slope Roofs: Steel pedestals with bases that rest on top of roofing membrane, not requiring any attachment to the roof structure and not penetrating the roofing assembly, with support fixtures as specified; and as follows:

Bases: High density polypropylene.

Base Sizes: As required to distribute load sufficiently to prevent indentation of roofing assembly.

Steel Components: Stainless steel, or carbon steel hot-dip galvanized after fabrication in accordance with ASTM A123/A123M.

Attachment/Support Fixtures: As recommended by manufacturer, same type as indicated for equivalent indoor hangers and supports; corrosion resistant material.

Height: Provide minimum clearance of 6 inches under pipe to top of roofing.

GATE VALVES

Up To and Including 3 Inches:

MSS SP-80, Class 125, bronze body, bronze trim, rising stem, handwheel, inside screw, solid wedge disc, solder or threaded ends.

2 Inches and Larger:

MSS SP-70, Class 125, iron body, bronze trim, outside screw and yoke, handwheel, solid wedge disc, flanged ends. Provide chain-wheel operators for valves 6 inches and larger mounted over 8 feet above floor.

BALL VALVES

Construction, 4 Inches and Smaller: MSS SP-110, Class 150, 400 psi CWP, bronze body, 304 stainless steel ball, full port, teflon seats and stuffing box ring, blow-out proof stem, lever handle, solder or threaded ends.

SWING CHECK VALVES

Up to 2 Inches:

MSS SP-80, Class 125, bronze body and cap, bronze swing disc with rubber seat, solder or threaded ends.

Over 2 Inches:

MSS SP-71, Class 125, iron body, bronze swing disc, renewable disc seal and seat, flanged ends.

SPRING LOADED CHECK VALVES

Class 125, iron body, bronze trim, stainless steel springs, bronze disc, Buna N seals, wafer style ends.

WATER PRESSURE REDUCING VALVES

Up to 2 Inches:

MSS SP-80, bronze body, stainless steel and thermoplastic internal parts, fabric reinforced diaphragm, strainer, threaded single union ends.

Over 2 Inches:

MSS SP-85, cast iron body, bronze fitted, elastomeric diaphragm and seat disc, flanged.

RELIEF VALVES

Pressure Relief:

AGA Z21.22 certified, bronze body, teflon seat, steel stem and springs, automatic, direct pressure actuated.

Temperature and Pressure Relief:

AGA Z21.22 certified, bronze body, teflon seat, stainless steel stem and springs, automatic, direct pressure actuated, temperature relief maximum 210 degrees F, capacity ASME (BPV IV) certified and labelled.

STRAINERS

Size 2 inch and Under:

Threaded brass body for 175 psi CWP, Y pattern with 1/32 inch stainless steel perforated screen.

Class 150, threaded bronze body 300 psi CWP, Y pattern with 1/32 inch stainless steel perforated screen.

Size 1-1/2 inch to 4 inch:

Class 125, flanged iron body, Y pattern with 1/16 inch stainless steel perforated screen.

Size 5 inch and Larger:

Class 125, flanged iron body, basket pattern with 1/8 inch stainless steel perforated screen.

PART 3 EXECUTION

EXAMINATION

Verify that excavations are to required grade, dry, and not over-excavated.

PREPARATION

Ream pipe and tube ends. Remove burrs. Bevel plain end ferrous pipe.

Remove scale and dirt, on inside and outside, before assembly.

Prepare piping connections to equipment with flanges or unions.

INSTALLATION

Install in accordance with manufacturer's instructions.

Provide non-conducting dielectric connections wherever jointing dissimilar metals.

Route piping in orderly manner and maintain gradient. Route parallel and perpendicular to walls.

Install piping to maintain headroom, conserve space, and not interfere with use of space.

Group piping whenever practical at common elevations.

Install piping to allow for expansion and contraction without stressing pipe, joints, or connected equipment. Refer to Section 22 05 16.

Provide clearance in hangers and from structure and other equipment for installation of insulation and access to valves and fittings. Refer to Section 22 07 19.

Provide access where valves and fittings are not exposed. Coordinate size and location of access doors with Section 08 31 00.

Install vent piping penetrating roofed areas to maintain integrity of roof assembly.

Where pipe support members are welded to structural building framing, scrape, brush clean, and apply one coat of zinc rich primer to welding.

Install valves with stems upright or horizontal, not inverted.

Pipe vents from gas pressure reducing valves to outdoors and terminate in weather proof hood.

Install water piping to ASME B31.9.

PVC Pipe: Make solvent-welded joints in accordance with ASTM D2855.

Sleeve pipes passing through partitions, walls and floors.

Inserts:

Provide inserts for placement in concrete formwork.

Provide inserts for suspending hangers from reinforced concrete slabs and sides of reinforced concrete beams.

Provide hooked rod to concrete reinforcement section for inserts carrying pipe over 4 inches.

Where concrete slabs form finished ceiling, locate inserts flush with slab surface.

Where inserts are omitted, drill through concrete slab from below and provide through-bolt with recessed square steel plate and nut above slab.

Pipe Hangers and Supports:

Install in accordance with ASME B31.9.

Support horizontal piping as scheduled.

Install hangers to provide minimum 1/2 inch space between finished covering and adjacent work.

Place hangers within 12 inches of each horizontal elbow.

Use hangers with 1-1/2 inch minimum vertical adjustment. Design hangers for pipe movement without disengagement of supported pipe.

Support vertical piping at every other floor. Support riser piping independently of connected horizontal piping.

Where several pipes can be installed in parallel and at same elevation, provide multiple or trapeze hangers.

Provide copper plated hangers and supports for copper piping.

Prime coat exposed steel hangers and supports. Hangers and supports located in crawl spaces, pipe shafts, and suspended ceiling spaces are not considered exposed.

Provide hangers adjacent to motor driven equipment with vibration isolation.

Support cast iron drainage piping at every joint.

APPLICATION

Use grooved mechanical couplings and fasteners only in accessible locations.

Install unions downstream of valves and at equipment or apparatus connections.

Install brass male adapters each side of valves in copper piped system. Solder adapters to pipe.

Install gate valves for shut-off and to isolate equipment, part of systems, or vertical risers.

Install globe valves for throttling, bypass, or manual flow control services.

Provide lug end butterfly valves adjacent to equipment when provided to isolate equipment.

Provide spring loaded check valves on discharge of water pumps.

Provide plug valves in natural gas systems for shut-off service.

Provide flow controls in water recirculating systems where indicated.

DISINFECTION OF DOMESTIC WATER PIPING SYSTEM

Disinfect water distribution system in accordance with Section 33 13 00.

Prior to starting work, verify system is complete, flushed and clean.

Ensure Ph of water to be treated is between 7.4 and 7.6 by adding alkali (caustic soda or soda ash) or acid (hydrochloric).

Inject disinfectant, free chlorine in liquid, powder, tablet or gas form, throughout system to obtain 50 to 80 mg/L residual.

Bleed water from outlets to ensure distribution and test for disinfectant residual at minimum 15 percent of outlets.

Maintain disinfectant in system for 24 hours.

If final disinfectant residual tests less than 25 mg/L, repeat treatment.

Flush disinfectant from system until residual equal to that of incoming water or 1.0 mg/L.

Take samples no sooner than 24 hours after flushing, from 10 percent of outlets and from water entry, and analyze in accordance with AWWA C651.

SERVICE CONNECTIONS

Provide new sanitary sewer services. Before commencing work check invert elevations required for sewer connections, confirm inverts and ensure that these can be properly connected with slope for drainage and cover to avoid freezing.

Provide new gas service complete with gas meter and regulators. Gas service distribution piping to have initial minimum pressure of 5 psi. Provide regulators on each line serving gravity type appliances, sized in accordance with equipment.

END OF SECTION

PART 1 GENERAL

SECTION INCLUDES

Water closets.
Urinals.
Lavatories.
Electric water coolers.
Drinking fountains.

REFERENCE STANDARDS

ASME A112.19.3 - Stainless Steel Plumbing Fixtures (Designed for Residential Use); The American Society of Mechanical Engineers.

SUBMITTALS

See Section 22 05 00 - Basic Plumbing Materials and Methods, for submittal procedures.

Product Data: Provide catalog illustrations of fixtures, sizes, rough-in dimensions, utility sizes, trim, and finishes.

Manufacturer's Instructions: Indicate installation methods and procedures.

Maintenance Data: Include fixture trim exploded view and replacement parts lists.

Warranty: Submit manufacturer warranty and ensure forms have been completed in Owner's name and registered with manufacturer.

Maintenance Materials: Furnish the following for FMD's use in maintenance of project.

- Extra Faucet Washers: One set of each type and size.
- Extra Lavatory Supply Fittings: One set of each type and size.
- Flush Valve Service Kits: 30 for each type and size.

QUALITY ASSURANCE

Manufacturer Qualifications: Company specializing in manufacturing the type of products specified in this section, with minimum three years of documented experience.

REGULATORY REQUIREMENTS

Products Requiring Electrical Connection: Listed and classified by Underwriters Laboratories Inc., as suitable for the purpose specified and indicated.

DELIVERY, STORAGE, AND HANDLING

Accept fixtures on site in factory packaging. Inspect for damage.

Protect installed fixtures from damage by securing areas and by leaving factory packaging in place to protect fixtures and prevent use.

WARRANTY

See Section 22 05 00 - Basic Plumbing Materials and Methods for additional warranty and closeout requirements.

PART 2 PRODUCTS

FIXTURES

Water closets, urinals, lavatories, showers, bathtubs, service sinks, other sinks, and fittings: See plans for specifications.

PART 3 EXECUTION

EXAMINATION

Verify that walls and floor finishes are prepared and ready for installation of fixtures.

Verify that electric power is available and of the correct characteristics.

Confirm that millwork is constructed with adequate provision for the installation of counter top lavatories and sinks.

PREPARATION

Rough-in fixture piping connections in accordance with minimum sizes indicated in fixture rough-in schedule for particular fixtures.

INSTALLATION

Install each fixture with trap, easily removable for servicing and cleaning.

Provide chrome plated rigid or flexible supplies to fixtures with loose key stops, reducers, and escutcheons.

Install components level and plumb.

Install and secure fixtures in place with wall supports and bolts.

Seal fixtures to wall and floor surfaces with sealant, color to match fixture.

INTERFACE WITH WORK OF OTHER SECTIONS

Review millwork shop drawings. Confirm location and size of fixtures and openings before rough-in and installation.

ADJUSTING

Adjust stops or valves for intended water flow rate to fixtures without splashing, noise, or overflow.

CLEANING

Clean plumbing fixtures and equipment.

PROTECTION

Protect installed products from damage due to subsequent construction operations.

Do not permit use of fixtures by construction personnel.

Repair or replace damaged products before Date of Substantial Completion.

END OF SECTION

PART 1 GENERAL

SUMMARY

Section Includes:

Mechanical Basic Requirements specifically applicable to Divisions 21, 22, and 23 in addition to the requirements of Division 1 - General Requirements and the General Conditions of the Contract.

Electric motors.

Mechanical Identification.

Sleeves

Mechanical sleeve seals.

Altitude rating.

RELATED SECTIONS

Work described in this section is related to other work described in Divisions 21, 22, 23, 27, and 28 and may be related to work in other Divisions concerning structure or appearances. Review and become familiar with work required in other Sections in this Division and with work required in the other Divisions. Coordinate with other subcontractor(s) to assure that all issues arising between related Sections are resolved.

Bring to the attention of the Engineer prior to the cutoff date for Addenda, any and all discrepancies in related work. Submission of a bid or proposal indicates that all costs for this work and related work are included in the bid for this work or within the bid or proposal for the related work.

SYSTEM DESCRIPTION

Provide complete and fully operational systems with facilities and services to meet requirements indicated and in accordance with applicable codes and ordinances.

REGULATORY REQUIREMENTS

All mechanical work shall be performed in strict accordance with the New Mexico Building Codes, IBC, UPC, UMC, NFPA, National Gas Code, Model Energy Code, and all applicable provisions of the local authorities having jurisdiction. All materials and labor necessary to comply with rules, regulations, and ordinances shall be provided. Where the drawings and/or specifications indicate material or construction in excess of code requirements or visa-versa, the more stringent application shall govern.

SUBMITTALS

Submit all data as a single package, as the Engineer will commence review only when all data has been received.

Submittal form to identify project, contractor, sub-contractor, supplier, and pertinent contract document references.

Apply Contractor's stamp, signed or initialed, certifying that review, verification of products required, field dimensions, adjacent construction work, and coordination of information is in accordance with the requirements of the work and contract documents.

The Contractor shall determine and verify field measurements and field construction criteria for conformance with drawings and specifications and for conflicts with other items of construction, past or present. He shall coordinate each submittal with the requirements of the work and of the contract documents and notify the Engineer in writing, at the time of the submission, of any and all deviations in the submittals from requirements of the work and contract documents.

No fabrication or work, which requires submittals, shall begin until submittals are returned with the Engineer's approval.

Identify variations for contract documents and product or system limitations, which may be detrimental to successful performance of the completed work.

Engineer's review does not constitute acceptance or responsibility for accuracy or dimensions, nor shall it relieve the Contractor from meeting any requirements of the work and contract documents, nor shall it constitute approval for any deviation from the contract documents, unless such deviations are specifically stated as such on the submittal and specifically allowed by the Engineer by specific written notification for each such variation. The Engineer's review will not relieve the Contractor from responsibility for errors or omissions in the shop drawings.

Revise and resubmit submittals as required. Identify all changes made since previous submittal.

SUBSTITUTIONS

Prior approval of materials and equipment will not be considered. Contract documents indicate specified equipment and acceptable alternatives. Any other equipment/material proposed must meet or exceed that specified. Equipment/material will be reviewed for compliance during submittal review process per Paragraph 1.5.

Engineer will consider requests for substitutions only at submittal review. Clearly identify substitution.

Document each request with complete data substantiating compliance of proposed substitution with contract documents.

A request for substitution constitutes a representation that the Contractor:

- Has investigated the proposed product and determined that it meets or exceeds the quality level of the specified product.
- Will provide the same warranty for the substitution as for the specified product.
- Will coordinate installation and make changes to other work, which may be required for the work to be complete with no additional cost to Owner.
- Waives claims for additional costs or time extensions which may, subsequently, become apparent.
- Will reimburse Owner and Architect/Engineer for review or redesign services associated with re-approval by authorities.

DELIVERY, STORAGE, AND HANDLING

In accordance with the requirements of Division 1.

PART 2 PRODUCTS

ELECTRIC MOTORS

Motors shall be of sufficient size for the duty to be performed and shall not exceed their full-rated load when the driven equipment is operating at specified capacity under the most severe conditions likely to be encountered.

Each motor shall be of the horsepower specified and suitable for operation at the elevation of the job site as scheduled on the drawings.

Motors shall conform to NEMA standards, applicable to IEEE Standards and ASA C50 Standards, and shall be suitable for direct coupling mounting or V-belt mounting in accordance with the drawings.

Motors controlled by variable frequency drives/adjustable frequency drives, “VFD/AFD”, shall be rated for use on “VFD/AFD” controllers.

MECHANICAL IDENTIFICATION

Equipment Nameplates: Laminated three-layer plastic with engraved black letters on light background color.

Valve Tags: Laminated three-layer plastic with engraved black letters on light background color, minimum 1-1/2 inches diameter.

Piping:

- Conform to ASME A13.1.
- Minimum information indicating flow direction arrow and identification of fluid being conveyed.

Plastic Pipe Markers: Factory fabricated, flexible, semi-rigid plastic, preformed to fit around pipe or pipe covering. Larger sizes may have maximum sheet size with spring fastener.

Plastic Tape Pipe Markers: Flexible, vinyl film tape with pressure sensitive adhesive backing and printed markings.

Plastic Underground Pipe Markers: Bright colored continuously printed plastic ribbon tape, minimum 6 inches wide by 4 mil thick, manufactured for direct burial service.

SLEEVES

Sleeves for pipes through non-fire rated floors: 18 gage thick galvanized steel.

Sleeves for pipes through non-fire rated beams, walls, footings, and potentially wet floors: steel pipe or 18 gage thick galvanized steel.

Sleeves for round ductwork: galvanized steel.

Sleeves for rectangular ductwork: galvanized steel or wood.

Sealant: acrylic

MECHANICAL SLEEVE SEALS

Modular mechanical type, consisting of interlocking synthetic rubber links shaped to continuously fill annular space between object and sleeve, connected with bolts and pressure plates causing rubber sealing elements to expand when tightened, providing watertight seal and electrical insulation.

ALTITUDE RATINGS

Unless otherwise noted, all specified equipment capacities, air quantities, etc., are for the altitude of the job site, as scheduled on the drawings, and adjustments to manufacturer's ratings must be made accordingly.

ACCESS PANELS

Install wall and ceiling access panels for access to hidden mechanical equipment in walls or above hard ceiling. Coordinate location with architect.

PART 3 EXECUTION

INSTALLATION - IDENTIFICATION

Install materials in accordance with manufacturer's instructions.

Degrease and clean surfaces to receive adhesive for identification materials.

Install plastic nameplates with adhesive.

Install plastic tags with corrosion-resistant metal chain.

Install underground plastic pipe markers 6 to 8 inches below finished grade, directly above buried pipe.

Label piping at all changes in direction and at a minimum of every 20 feet of straight runs of pipe.

Record actual location of valves on Project Record Documents.

INSTALLATION - CONDENSATE AND OVERFLOW DRAINS

Install condensate and overflow drain piping from all mechanical equipment drain points. Extend and terminate per UPC/UMC.

INSTALLATION - SLEEVES

Verify openings are ready to receive sleeves.

Exterior watertight entries: Seal with mechanical sleeve seals.

Set sleeves in position in forms. Provide reinforcing around sleeves.

Size sleeves large enough to allow for movement due to expansion and contraction. Provide for continuous insulation wrapping.

Extend sleeves through floors 1 inch above finished floor level. Caulk sleeves.

Where piping or ductwork penetrates floor, ceiling, or wall, close off space between pipe or duct and adjacent work with firestopping insulation and caulk airtight. Provide close fitting metal collar or escutcheon covers at both sides of penetration.

Install chrome plated steel or, if allowed by the authority having jurisdiction, plastic escutcheons at finished surfaces.

EXISTING SERVICES

The Contractor shall carefully examine the drawings and specifications, visit the site of the work, be fully informed as to all existing conditions, dimensions, and limitations before starting work.

If existing active or non-active services, which are not shown on plans, are encountered which require relocation or disconnection, the Contractor shall notify the Engineer for a decision on proper handling of these services. The Contractor shall not proceed with the work until so authorized.

EXCAVATION AND BACKFILL OF TRENCHES

All excavation, trenching, and backfilling, as required for the mechanical installation, shall be provided by the Contractor.

All piping laid in trenches shall be bedded evenly and firmly. The trench bed shall consist of undisturbed native soil or shall be compacted to an equally firm bedding. Recesses shall be formed below the trench bed to receive the flange or hub off each section of pipe or fitting.

Where firm bedding is not obtainable, sand or gravel fill, compacted with water or low strength concrete fill around the bottom half of the pipe, shall be used.

Backfill all trenches as soon as possible after inspection. Spread backfill in layers, not to exceed 8 inches, and compact each layer to ninety-five percent (95%) of maximum density based on Modified Proctor Density, in such areas as streets, driveways, alleys, or walks to prevent settling. Backfill shall be neither excessively wet or dry. Puddling or flooding shall not be used, except in sand or gravel-bearing soil, and as specifically approved. Street cuts shall be made 8 inches wider than required trenches and shall be repaired to match the finish surface of the street and be flush with existing grades.

Use plastic underground pipe markers for all buried piping.

PAINTING

Surfaces of all equipment and material shall be thoroughly cleaned and left ready for painting.

Painting shall be performed according to other specifications in these contract documents.

ELECTRICAL WIRING AND CONTROL EQUIPMENT

All motor starters, disconnects overload protection equipment, and low voltage control equipment and wiring specified under this Division will be the responsibility of this Contractor. Installation of line voltage components and wiring specified under this Division will be the responsibility of the electrical contractor. Purchase and installation of low voltage components and wiring specified under this Division will be this Contractor's responsibility.

The mechanical contractor must coordinate with the electrical contractor on the division of responsibility pertaining to the purchase and installation of electrical control components. Any changes or additions required due to the specific nature of equipment furnished shall be the complete responsibility of the Contractor furnishing the equipment.

All electrical work performed under this Division will be in compliance with the NEC and all applicable city and state ordinances. All controllers furnished with mechanical equipment shall have overload protection on all phases.

The mechanical contractor must coordinate with the electrical contractor to ensure that all required components of control work are included and fully understood. No additional costs shall accrue to the Owner as a result of lack of such coordination.

SUBSTANTIAL COMPLETION AND FINAL INSPECTION REQUIREMENTS

Before substantial completion can be granted, the following items must be completed and submitted to the Owner/Engineer:

An approved Test and Balance Report.
Operation test demonstrating proper operation of all equipment.
Control diagrams, wiring diagrams, control sequences, and engineering data on components.

Prior to the final inspection or consideration of final payment, the Contractor shall:

Provide copies of permits, operating permits, and/or inspection certificates.
Provide a check-out report.

Provide operating and maintenance manual(s).

Provide record as-built drawings.
Return keys to the Owner.
Deliver all spare parts.
Touch up any damaged finishes.
Provide a copy of attendance roster for equipment training sessions.
Provide all warrantee certificates and documentation.

END OF SECTION

THIS PAGE INTENTIONALLY BLANK

PART 1 GENERAL

SECTION INCLUDES

Testing, adjustment, and balancing of air systems.

Testing, adjustment, and balancing of refrigerating systems.

Measurement of final operating condition of HVAC systems.

SUBMITTALS

Qualifications: Submit name of adjusting and balancing agency and TAB supervisor for approval within 30 days after award of Contract.

TAB Plan: Submit a written plan indicating the testing, adjusting, and balancing standard to be followed and the specific approach for each system and component.

Include at least the following in the plan:

List of all air flow, water flow, sound level, system capacity and efficiency measurements to be performed and a description of specific test procedures, parameters, formulas to be used.

Copy of field checkout sheets and logs to be used, listing each piece of equipment to be tested, adjusted and balanced with the data cells to be gathered for each.

Discussion of what notations and markings will be made on the duct and piping drawings during the process.

Final test report forms to be used.

Procedures for formal deficiency reports, including scope, frequency and distribution.

Final Report: Indicate deficiencies in systems that would prevent proper testing, adjusting, and balancing of systems and equipment to achieve specified performance.

Submit to the Commissioning Authority within two weeks after completion of testing, adjusting, and balancing.

Revise TAB plan to reflect actual procedures and submit as part of final report.

Submit draft copies of report for review prior to final acceptance of Project. Provide final copies for Architect and for inclusion in operating and maintenance manuals.

Include actual instrument list, with manufacturer name, serial number, and date of calibration.

Form of Test Reports: Where the TAB standard being followed recommends a report format use that; otherwise, follow ASHRAE Std 111.

Units of Measure: Report data in both I-P (inch-pound) and SI (metric) units.

PART 2 PRODUCTS - NOT USED

PART 3 EXECUTION

GENERAL REQUIREMENTS

Perform total system balance in accordance with one of the following:

AABC MN-1, AABC National Standards for Total System Balance.

ASHRAE Std 111, Practices for Measurement, Testing, Adjusting and Balancing of Building Heating, Ventilation, Air-Conditioning, and Refrigeration Systems.

NEBB Procedural Standards for Testing Adjusting Balancing of Environmental Systems.

SMACNA HVAC Systems Testing, Adjusting, and Balancing.

Begin work after completion of systems to be tested, adjusted, or balanced and complete work prior to Substantial Completion of the project.

Where HVAC systems and/or components interface with life safety systems, including fire and smoke detection, alarm, and control, coordinate scheduling and testing and inspection procedures with the authorities having jurisdiction.

TAB Agency Qualifications:

Company specializing in the testing, adjusting, and balancing of systems specified in this section.

Having minimum of three years documented experience.

Certified by one of the following:

AABC, Associated Air Balance Council: www.aabchq.com; upon completion submit AABC National Performance Guaranty.

NEBB, National Environmental Balancing Bureau: www.nebb.org.

TABB, The Testing, Adjusting, and Balancing Bureau of National Energy Management Institute: www.tabbcertified.org.

TAB Supervisor and Technician Qualifications: Certified by same organization as TAB agency.

EXAMINATION

Verify that systems are complete and operable before commencing work. Ensure the following conditions:

Systems are started and operating in a safe and normal condition.

Temperature control systems are installed complete and operable.

Proper thermal overload protection is in place for electrical equipment.

Final filters are clean and in place. If required, install temporary media in addition to final filters.

Duct systems are clean of debris.

Fans are rotating correctly.

Fire and volume dampers are in place and open.

Air coil fins are cleaned and combed.

Access doors are closed and duct end caps are in place.

Air outlets are installed and connected.

Duct system leakage is minimized.

Submit field reports. Report defects and deficiencies that will or could prevent proper system balance.

Beginning of work means acceptance of existing conditions.

PREPARATION

Hold a pre-balancing meeting at least one week prior to starting TAB work.

Require attendance by all installers whose work will be tested, adjusted, or balanced.

Provide additional balancing devices as required.

ADJUSTMENT TOLERANCES

Air Handling Systems: Adjust to within plus or minus 5 percent of design for supply systems and plus or minus 10 percent of design for return and exhaust systems.

Air Outlets and Inlets: Adjust total to within plus 10 percent and minus 5 percent of design to space. Adjust outlets and inlets in space to within plus or minus 10 percent of design.

RECORDING AND ADJUSTING

Field Logs: Maintain written logs including:

Running log of events and issues.

Discrepancies, deficient or uncompleted work by others.

Contract interpretation requests.

Lists of completed tests.

Ensure recorded data represents actual measured or observed conditions.

Permanently mark settings of valves, dampers, and other adjustment devices allowing settings to be restored. Set and lock memory stops.

Mark on the drawings the locations where traverse and other critical measurements were taken and cross reference the location in the final report.

After adjustment, take measurements to verify balance has not been disrupted or that such disruption has been rectified.

Leave systems in proper working order, replacing belt guards, closing access doors, closing doors to electrical switch boxes, and restoring thermostats to specified settings.

AIR SYSTEM PROCEDURE

Adjust air handling and distribution systems to provide required or design supply, return, and exhaust air quantities at site altitude.

Make air quantity measurements in ducts by Pitot tube traverse of entire cross sectional area of duct.

Measure air quantities at air inlets and outlets.

Adjust distribution system to obtain uniform space temperatures free from objectionable drafts and noise.

Use volume control devices to regulate air quantities only to extend that adjustments do not create objectionable air motion or sound levels. Effect volume control by duct internal devices such as dampers and splitters.

Vary total system air quantities by adjustment of fan speeds. Provide drive changes required. Vary branch air quantities by damper regulation.

Provide system schematic with required and actual air quantities recorded at each outlet or inlet.

Measure static air pressure conditions on air supply units, including filter and coil pressure drops, and total pressure across the fan. Make allowances for 50 percent loading of filters.

Adjust outside air automatic dampers, outside air, return air, and exhaust dampers for design conditions.

Measure temperature conditions across outside air, return air, and exhaust dampers to check leakage.

Where modulating dampers are provided, take measurements and balance at extreme conditions. Balance variable volume systems at maximum air flow rate, full cooling, and at minimum air flow rate, full heating.

Measure building static pressure and adjust supply, return, and exhaust air systems to provide required relationship between each to maintain approximately 0.05 inches positive static pressure near the building entries.

Check multi-zone units for motorized damper leakage. Adjust air quantities with mixing dampers set first for cooling, then heating, then modulating.

For variable air volume system powered units set volume controller to air flow setting indicated. Confirm connections properly made and confirm proper operation for automatic variable air volume temperature control.

SCOPE

Test, adjust, and balance the following:

- Forced Air Furnaces
- Packaged Roof Top Heating/Cooling Units
- Packaged Terminal Air Conditioning Units
- Fans

MINIMUM DATA TO BE REPORTED

Electric Motors:

- Manufacturer
- Model/Frame

- HP/BHP
- Phase, voltage, amperage; nameplate, actual, no load
- RPM

V-Belt Drives:
- Identification/location
- Required driven RPM
- Driven sheave, diameter and RPM
- Belt, size and quantity

Air Cooled Condensers:
- Identification/number
- Location
- Manufacturer
- Model number
- Serial number
- Entering DB air temperature, design and actual
- Leaving DB air temperature, design and actual
- Number of compressors

Electric Duct Heaters:
- Manufacturer
- Identification/number
- Location
- Model number
- Design kW
- Number of stages
- Phase, voltage, amperage
- Test voltage (each phase)
- Test amperage (each phase)
- Air flow, specified and actual
- Temperature rise, specified and actual

Air Moving Equipment:
- Location
- Manufacturer
- Model number
- Serial number
- Arrangement/Class/Discharge
- Air flow, specified and actual
- Return air flow, specified and actual
- Outside air flow, specified and actual
- Total static pressure (total external), specified and actual
- Inlet pressure
- Discharge pressure

Exhaust Fans:
- Location
- Manufacturer
- Model number
- Serial number

Air flow, specified and actual
Total static pressure (total external), specified and actual
Inlet pressure

END OF SECTION

THIS PAGE INTENTIONALLY BLANK

PART 1 GENERAL

GENERAL

This specification section defines the minimum quality, labor and supervision, tools and equipment, methods and procedures, materials, and assemblies for furnishing, fabricating, assembling, and installing complete permanently-installed, commercial insulation systems as shown on the drawings, design data sheets, lists and schedules, and other instructions included in these technical specifications.

Modifications, alterations, exceptions, or additions to these specifications shall be as detailed on the mechanical drawing(s), in special instructions, or published in numbered addenda described in these specifications. Changes to the work shall be made only by change order procedure as described in these specifications.

By submission of bid, Contractor assures the Owner/Engineer that he/she fully understands the work and has included all items and costs for a complete system as described above.

DESIGN CRITERIA

The Contractor shall review and consider the project design criteria in the selection of materials and accessories in the insulation system.

DEFINITIONS

Insulation terminology within this specification shall be that included in the "Glossary" of MICA.

SUBMITTALS

Procedures for submittals: See Section 23 05 00.

Insulation Schedule: Product Data — Submit product description, list of materials and thickness for each service or equipment scheduled and locations.

Manufacturer’s Installation Instructions: Submit manufacturer’s installation instructions for each product type.

Samples: If insulation schedule submitted outlining the method of the installation and the material to be used is in compliance with this specification, submission of samples or data is not required. If the Contractor proposes material or methods not exactly as specified, but is intended to be of equal or higher quality and performance, then catalog data sheets, samples, and other supporting information shall be submitted.

CLARITY OF INFORMATION

It shall be noted that the drawings, specifications, and standards are complementary to each other, meaning that what is called for in one is called for in all. Where conflicts occur between drawings, specifications, and standards, specifications shall govern.

SCOPE OF WORK

Installation shall mean, but is not limited to, purchasing, receiving, transporting, storing, fabricating, applying, inspecting, and proving complete insulation systems in accordance with MICA national standards, addenda, and those technical specifications for the individual insulation systems under the contract.

EQUIPMENT

Contractor shall provide all tools, ladders, staging, platforms, scaffolding, and other devices required for a complete installation of the complete insulation systems, and shall maintain these items in a safe and operating condition.

ENVIRONMENTAL REQUIREMENTS

Maintain ambient temperatures and conditions required by manufacturers of adhesives, mastics, and insulation cements.

Maintain temperature during and after installation for minimum period of twenty-four (24) hours. Monitoring will be required at intervals and tolerances recommended by manufacturer. Materials exposed to conditions outside manufacturer's recommendations will be subject to reinstallation.

QUALIFICATIONS

Manufacturer: Company specializing in manufacturing products specified in this section with minimum three years documented experience and with service facilities within 100 miles of Project.

Installer: Company specializing in performing Work of this section with minimum three years documented experience, approved by manufacturer.

PART 2 PRODUCTS

GENERAL

Materials furnished under this specification shall be standard, cataloged products, new and commercially available, suitable for service, requiring high performance and reliability with low maintenance, and free of all defects.

Materials include, but are not limited to, insulation materials, accessories (staples, bands, mesh, wire, clips, pins, tape, anchors, corner angles, and similar recommended accessories), and compounds (cements, adhesives, coatings, sealers, protective finishes, and similar other recommended items for the systems).

All adhesives, sealants and sealant primers VOC limits shall comply with the South Coast Air Quality Management District (SCAQMD) Rule #1168.

The Contractor, unless clearly stated otherwise, shall supply materials, which meet the Engineer's requirements with respect to the design criteria, thermal conductivity, and standards.

The Contractor shall warrant the materials in accordance with these specifications.

Specified components of the insulation system, including accessories and compounds as listed above, shall have a fire hazard rating not to exceed:

Flame spread:25

Smoke developed:50

All accessories and materials are to be shipped to the job site in marked, unopened containers as received from the manufacturer.

PART 3 EXECUTION

GENERAL

All insulation work shall be performed by skilled mechanics regularly engaged in the insulation trade.

The Contractor shall be responsible for coordination and cooperation with the Owner/Engineer and all other trades, so that the installation is performed with minimum interference and conflict. Verify that ductwork has been tested before applying insulation materials.

Final appearance: Neat, workmanlike, and attractive.

Progressive testing: Shall be completed and approved by Engineer or designate before insulation is applied.

Cleaning: Prior to applications of insulation, all surfaces shall be cleaned, dry, and free of dust, dirt, grease, frost, moisture, and other imperfections.

Applications temperature and conditions: Contractor shall assure that all conditions are met for the application of the insulation systems and that the recommended durations are met.

Moisture protection: All insulation shall be protected from moisture and weather during storage, installation, and until Owner/Engineer has taken beneficial occupancy of facility. Applied insulation which has become wet, shall be thoroughly dried before sealing or jacketing is applied.

Protection from damage: Insulation, fabric, jacketing, and all accessories and compounds shall be protected from damage by the Contractor. All damage shall be repaired prior to the final inspections of the project.

Storage: Contractor is responsible for proper material storage at site.

Work starting: No work shall commence until Contractor has received approved submittals for all insulation systems required in the project.

Clearances and accesses: The installation of insulation systems shall, in no way, reduce or interfere with the access and adequate clearances for control mechanisms, dampers, sleeves, columns, walls, vibrations isolation, flexibility components, and other job features. Maintain service clearances to strainers so that drain port is clear of all obstructions.

Finishing: All insulation at handholes, access doors, or other openings and adjacent to flanges and valves shall be neatly finished where exposed to view.

Sleeves: Where insulated pipes or ducts pass through sleeves or openings, the full specified thickness of insulation shall pass through the sleeve or openings.

Vapor barriers: Vapor barriers shall be continuous through sleeves, hangers, etc. If pierced, vapor barriers shall be covered and suitably resealed.

OWNER/ENGINEER ACCEPTANCE

All materials, accessories, compounds, and methods of installation and fabrication are subject to the Owner's/Engineer's inspections and approval at any phase of the work.

END OF SECTION

THIS PAGE INTENTIONALLY BLANK

PART 1 GENERAL

SECTION INCLUDES

Duct insulation.

Duct Liner.

Insulation jackets.

REFERENCE STANDARDS

ASTM B209 - Standard Specification for Aluminum and Aluminum-Alloy Sheet and Plate.

ASTM B209M - Standard Specification for Aluminum and Aluminum-Alloy Sheet and Plate [Metric].

ASTM C518 - Standard Test Method for Steady-State Thermal Transmission Properties by Means of the Heat Flow Meter Apparatus.

ASTM C553 - Specification for Mineral Fiber Blanket Thermal Insulation for Commercial and Industrial Applications.

ASTM C612 - Standard Specification for Mineral Fiber Block and Board Thermal Insulation.

ASTM C916 - Standard Specification for Adhesives for Duct Thermal Insulation.

ASTM C1338 - Standard Test Method for Determining Fungi Resistance of Insulation Materials and Facings.

ASTM E84 - Standard Test Method for Surface Burning Characteristics of Building Materials.

ASTM E96/E96M - Standard Test Methods for Water Vapor Transmission of Materials.

ASTM G21 - Standard Practice for Determining Resistance of Synthetic Polymeric Materials to Fungi.

NFPA 255 - Standard Method of Test of Surface Burning Characteristics of Building Materials; National Fire Protection Association.

SMACNA (DCS) - HVAC Duct Construction Standards; Sheet Metal and Air Conditioning Contractors' National Association.

UL 723 - Standard for Test for Surface Burning Characteristics of Building Materials; Underwriters Laboratories Inc..

SUBMITTALS

See Section 23 05 00 - Basic Mechanical Materials and Methods, for submittal procedures.

Product Data: Provide product description, thermal characteristics, list of materials and thickness for each service, and locations.

Manufacturer's Instructions: Indicate installation procedures necessary to ensure acceptable workmanship and that installation standards will be achieved.

Maintain one copy of each document on site.

QUALITY ASSURANCE

Manufacturer Qualifications: Company specializing in manufacturing products of the type specified in this section with not less than three years of documented experience.

Applicator Qualifications: Company specializing in performing the type of work specified in this section, with minimum 3 years of experience and approved by manufacturer.

DELIVERY, STORAGE, AND HANDLING

Accept materials on site in original factory packaging, labelled with manufacturer's identification, including product density and thickness.

Protect insulation from weather and construction traffic, dirt, water, chemical, and mechanical damage, by storing in original wrapping.

FIELD CONDITIONS

Maintain ambient temperatures and conditions required by manufacturers of adhesives, mastics, and insulation cements.

Maintain temperature during and after installation for minimum period of 24 hours.

PART 2 PRODUCTS

REQUIREMENTS FOR ALL PRODUCTS OF THIS SECTION

Surface Burning Characteristics: Flame spread/Smoke developed index of 25/50, maximum, when tested in accordance with ASTM E84, NFPA 255, or UL 723.

INSULATION SYSTEM DESCRIPTIONS

The thickness schedules and the following descriptions specify the type of insulation, accessories, etc., and the thicknesses of insulation and the method of installation to be employed for each insulation system.

Ductwork, indoor:

- Ductwork: Rectangular.
- Blanket insulation: Glass fiber, K factor 0.24 @ 40 degrees F. with factory-applied vapor barrier jacket.
- Securement: Factory lap, sealed with adhesive and/or staples.
- Mechanical fasteners: Use on underside to support insulation whenever duct width exceeds 24 inches. Install no closer than 3 inches from the joints.
- Vapor barrier tape: Install over all tears and penetrations of the vapor barrier.

Ductwork, outdoor:

- Ductwork: Rectangular.
- Fibrous board insulation: Glass fiber board, K factor 0.28 @ 200 degrees F. with factory-applied vapor barrier jacket.
- Securement: Factory lap, sealed with adhesive and/or staples.
- Mechanical fasteners: As required to support insulation wherever. Install no closer than 3 inches from the joints.
- Vapor barrier tape: Install over all tears and penetrations of the vapor barrier.
- Weather barrier: Mastic reinforced with mesh and thoroughly sealed for weather tightness.

GLASS FIBER, FLEXIBLE

Insulation: ASTM C553; flexible, noncombustible blanket.

- 'K' value: 0.36 at 75 degrees F, when tested in accordance with ASTM C518.
- Maximum Service Temperature: 1200 degrees F.
- Maximum Water Vapor Sorption: 5.0 percent by weight.

Vapor Barrier Jacket:

- Kraft paper with glass fiber yarn and bonded to aluminized film.
- Moisture Vapor Permeability: 0.02 perm inch, when tested in accordance with ASTM E96/E96M.
- Secure with pressure sensitive tape.

Vapor Barrier Tape:

- Kraft paper reinforced with glass fiber yarn and bonded to aluminized film, with pressure sensitive rubber based adhesive.

Tie Wire: Annealed steel, 16 gage.

GLASS FIBER, RIGID

Insulation: ASTM C612; rigid, noncombustible blanket.

- 'K' value: 0.24 at 75 degrees F, when tested in accordance with ASTM C518.

Maximum service temperature: 450 degrees F.
Maximum Water Vapor Sorption: 5.0 percent.
Maximum Density: 8.0 lb/cu ft.
Vapor Barrier Jacket:
Kraft paper with glass fiber yarn and bonded to aluminized film.
Moisture Vapor Permeability: 0.02 perm inch, when tested in accordance with ASTM E96/E96M.
Secure with pressure sensitive tape.
Vapor Barrier Tape:
Kraft paper reinforced with glass fiber yarn and bonded to aluminized film, with pressure sensitive rubber based adhesive.

JACKETS

Aluminum Jacket: ASTM B209 (ASTM B209M).
Thickness: 0.016 inch sheet.
Finish: Smooth.
Joining: Longitudinal slip joints and 2 inch laps.
Fittings: 0.016 inch thick die shaped fitting covers with factory attached protective liner.
Metal Jacket Bands: 3/8 inch wide; 0.015 inch thick aluminum.

DUCT LINER

Insulation: Non-corrosive, incombustible glass fiber complying with ASTM C1071; flexible blanket, rigid board, and preformed round liner board; impregnated surface and edges coated with poly vinyl acetate polymer, acrylic polymer, or black composite.
Fungi Resistance: ASTM G21.
Apparent Thermal Conductivity: Maximum of 0.31 at 75 degrees F.
Service Temperature: Up to 250 degrees F.
Rated Velocity on Coated Air Side for Air Erosion: 5,000 fpm, minimum.
Minimum Noise Reduction Coefficients:
1/2 inch Thickness: 0.30.
1 inch Thickness: 0.45.
1-1/2 inches Thickness: 0.60.
2 inch Thickness: 0.70.
Adhesive: Waterproof, fire-retardant type, ASTM C916.
Liner Fasteners: Galvanized steel, self-adhesive pad with integral head.

PART 3 EXECUTION

EXAMINATION

Verify that ducts have been tested before applying insulation materials.
Verify that surfaces are clean, foreign material removed, and dry.

INSTALLATION

Install in accordance with manufacturer's instructions.
Install in accordance with NAIMA National Insulation Standards.
Insulated ducts conveying air below ambient temperature:
Provide insulation with vapor barrier jackets.
Finish with tape and vapor barrier jacket.
Continue insulation through walls, sleeves, hangers, and other duct penetrations.

Insulate entire system including fittings, joints, flanges, fire dampers, flexible connections, and expansion joints.

Insulated ducts conveying air above ambient temperature:

Provide with or without standard vapor barrier jacket.

Insulate fittings and joints. Where service access is required, bevel and seal ends of insulation.

Ducts Exposed in Mechanical Equipment Rooms or Finished Spaces (below 10 feet above finished floor): Finish with aluminum jacket.

Exterior Applications: Provide insulation with vapor barrier jacket. Cover with with calked aluminum jacket with seams located on bottom side of horizontal duct section.

External Duct Insulation Application:

Secure insulation with vapor barrier with wires and seal jacket joints with vapor barrier adhesive or tape to match jacket.

Secure insulation without vapor barrier with staples, tape, or wires.

Install without sag on underside of duct. Use adhesive or mechanical fasteners where necessary to prevent sagging. Lift duct off trapeze hangers and insert spacers.

Seal vapor barrier penetrations by mechanical fasteners with vapor barrier adhesive.

Stop and point insulation around access doors and damper operators to allow operation without disturbing wrapping.

Duct and Plenum Liner Application:

Adhere insulation with adhesive for 90 percent coverage.

Secure insulation with mechanical liner fasteners. Refer to SMACNA HVAC Duct Construction Standards for spacing.

Seal and smooth joints. Seal and coat transverse joints.

Seal liner surface penetrations with adhesive.

Duct dimensions indicated are net inside dimensions required for air flow. Increase duct size to allow for insulation thickness.

SCHEDULES

Combustion Air Duct:

Rigid Glass Fiber Duct Insulation: 1 inch thick.

Exhaust Ducts Within 10 ft of Exterior Openings:

Flexible Glass Fiber Duct Insulation: 1 inches thick.

Ducts Within 10 ft of Exterior Openings:

Flexible Glass Fiber Duct Insulation: 1 inches thick.

Exhaust Ducts Exposed to Outdoor Air:

Flexible Glass Fiber Duct Insulation: 1 inches thick with aluminum jacket.

Outside Air Intake Ducts:

Rigid Glass Fiber Duct Insulation: 1 inch thick.

Plenums:

Rigid Glass Fiber Duct Insulation: 1 inch thick.

Plenums (Cooling System):

Rigid Glass Fiber Duct Insulation: 1 inch thick.

Ventilation Equipment Casings:

Rigid Glass Fiber Duct Insulation: 1 inch thick.

Supply Ducts:

Flexible Glass Fiber Duct Insulation: 1-1/2 inches thick.

Return Ducts in Unconditioned Spaces:

Flexible Glass Fiber Duct Insulation: 2 inches thick.

Return and Relief Ducts in Mechanical Rooms:

Rigid Glass Fiber Duct Insulation: 1 inch thick.

Ducts Exposed to Outdoors:

Rigid Glass Fiber Duct Insulation: 2 inch thick

END OF SECTION

THIS PAGE INTENTIONALLY BLANK

PART 1 GENERAL

SECTION INCLUDES

Metal ductwork.

Duct cleaning.

REFERENCE STANDARDS

ASTM A36/A36M - Standard Specification for Carbon Structural Steel.

ASTM A653/A653M - Standard Specification for Steel Sheet, Zinc-Coated (Galvanized) or Zinc-Iron Alloy-Coated (Galvannealed) by the Hot-Dip Process.

ASTM E84 - Standard Test Method for Surface Burning Characteristics of Building Materials.

ICC-ES AC01 - Acceptance Criteria for Expansion Anchors in Masonry Elements.

ICC-ES AC106 - Acceptance Criteria for Predrilled Fasteners (Screw Anchors) in Masonry Elements.

ICC-ES AC193 - Acceptance Criteria for Mechanical Anchors in Concrete Elements.

ICC-ES AC308 - Acceptance Criteria for Post-Installed Adhesive Anchors in Concrete Elements.

NFPA 90A - Standard for the Installation of Air-Conditioning and Ventilating Systems; National Fire Protection Association.

SMACNA (LEAK) - HVAC Air Duct Leakage Test Manual; Sheet Metal and Air Conditioning Contractors' National Association.

SMACNA (DCS) - HVAC Duct Construction Standards.

SUBMITTALS

See Section 23 05 00 - Basic Mechanical Materials and Methods, for submittal procedures.

Product Data: Provide data for duct materials.

Shop Drawings: Indicate duct fittings, particulars such as gages, sizes, welds, and configuration prior to start of work for 2 inch pressure class and higher systems.

Test Reports: Indicate pressure tests performed. Include date, section tested, test pressure, and leakage rate, following SMACNA (LEAK) - HVAC Air Duct Leakage Test Manual.

Manufacturer's Installation Instructions: Indicate special procedures for glass fiber ducts.

Manufacturer's Certificate: Certify that installation of glass fiber ductwork meet or exceed specified requirements.

Project Record Documents: Record actual locations of ducts and duct fittings. Record changes in fitting location and type. Show additional fittings used.

QUALITY ASSURANCE

Manufacturer Qualifications: Company specializing in manufacturing the type of products specified in this section, with minimum three years of documented experience.

Installer Qualifications: Company specializing in performing the type of work specified in this section, with minimum 3 years of documented experience.

REGULATORY REQUIREMENTS

Construct ductwork to NFPA 90A standards.

FIELD CONDITIONS

Do not install duct sealants when temperatures are less than those recommended by sealant manufacturers.

Maintain temperatures within acceptable range during and after installation of duct sealants.

PART 2 PRODUCTS

DUCT ASSEMBLIES

All Ducts: Galvanized steel, unless otherwise indicated.

MATERIALS

Galvanized Steel for Ducts: Hot-dipped galvanized steel sheet, ASTM A653/A653M FS Type B, with G60/Z180 coating.

Joint Sealers and Sealants: Non-hardening, water resistant, mildew and mold resistant.

Type: Heavy mastic or liquid used alone or with tape, suitable for joint configuration and compatible with substrates, and recommended by manufacturer for pressure class of ducts.

VOC Content: Not more than 250 g/L, excluding water.

Surface Burning Characteristics: Flame spread of zero, smoke developed of zero, when tested in accordance with ASTM E84.

Hanger Rod: ASTM A36/A36M; steel, galvanized; threaded both ends, threaded one end, or continuously threaded.

Hanger Fasteners: Attach hangers to structure using appropriate fasteners, as follows:

Concrete Wedge Expansion Anchors: Complying with ICC-ES AC193.

Masonry Wedge Expansion Anchors: Complying with ICC-ES AC01.

Concrete Screw Type Anchors: Complying with ICC-ES AC193.

Masonry Screw Type Anchors: Complying with ICC-ES AC106.

Concrete Adhesive Type Anchors: Complying with ICC-ES AC308.

Other Types: As required.

DUCTWORK FABRICATION

Fabricate and support in accordance with SMACNA HVAC Duct Construction Standards and as indicated.

Provide duct material, gages, reinforcing, and sealing for operating pressures indicated.

Construct T's, bends, and elbows with radius of not less than 1-1/2 times width of duct on centerline. Where not possible and where rectangular elbows must be used, provide air foil turning vanes of perforated metal with glass fiber insulation.

Provide turning vanes of perforated metal with glass fiber insulation when acoustical lining is indicated.

Increase duct sizes gradually, not exceeding 15 degrees divergence wherever possible; maximum 30 degrees divergence upstream of equipment and 45 degrees convergence downstream.

Fabricate continuously welded round and oval duct fittings in accordance with SMACNA HVAC Duct Construction Standards.

PART 3 EXECUTION

INSTALLATION

Install, support, and seal ducts in accordance with SMACNA HVAC Duct Construction Standards.

Install in accordance with manufacturer's instructions.

During construction provide temporary closures of metal or taped polyethylene on open ductwork to prevent construction dust from entering ductwork system.

Duct sizes indicated are inside clear dimensions. For lined ducts, maintain sizes inside lining.

Provide openings in ductwork where required to accommodate thermometers and controllers. Provide pilot tube openings where required for testing of systems, complete with metal can with spring device or screw to ensure against air leakage. Where openings are provided in insulated ductwork, install insulation material inside a metal ring.

Locate ducts with sufficient space around equipment to allow normal operating and maintenance activities.

CLEANING

Clean duct system and force air at high velocity through duct to remove accumulated dust. To obtain sufficient air, clean half the system at a time. Protect equipment that could be harmed by excessive dirt with temporary filters, or bypass during cleaning.

END OF SECTION

THIS PAGE INTENTIONALLY BLANK

PART 1 GENERAL

SECTION INCLUDES

Air turning devices/extractors.
Backdraft dampers - metal.
Duct access doors.
Duct test holes.
Flexible duct connections.
Smoke dampers.
Volume control dampers.

RELATED REQUIREMENTS

Section 23 05 00 - Basic Mechanical Materials and Methods.
Section 23 31 00 - HVAC Ducts and Casings.

REFERENCE STANDARDS

NFPA 90A - Standard for the Installation of Air-Conditioning and Ventilating Systems; National Fire Protection Association.
NFPA 92 - Standard for Smoke-Control Systems.
SMACNA (DCS) - HVAC Duct Construction Standards.
UL 555S - Standard for Leakage Rated Dampers for Use in Smoke Control Systems; Underwriters Laboratories Inc..

SUBMITTALS

See Section 23 05 00 - Basic Mechanical Materials and Methods, for submittal procedures.
Product Data: Provide for shop fabricated assemblies including volume control dampers. Include electrical characteristics and connection requirements.
Shop Drawings: Indicate for shop fabricated assemblies including volume control dampers.
Manufacturer's Installation Instructions: Provide instructions for fire dampers.
Project Record Drawings: Record actual locations of access doors and test holes.
Maintenance Materials: Furnish the following for Owner's use in maintenance of project.
  See Section 23 05 00 - Basic Mechanical Materials and Methods, for additional provisions.
  Extra Fusible Links: One of each type and size.
Maintain one copy of each document on site.

QUALITY ASSURANCE

Manufacturer Qualifications: Company specializing in manufacturing the type of products specified in this section, with minimum three years of documented experience.
Installer Qualifications: Company specializing in performing Work of this section with minimum three years documented experience.

DELIVERY, STORAGE, AND HANDLING

Protect dampers from damage to operating linkages and blades.

PART 2 PRODUCTS

AIR TURNING DEVICES/EXTRACTORS

Manufacturers:

Carlisle HVAC Products; Dynair Hollow Vane and Rail (Double Wall Vane): www.carlislehvac.com.
Elgen Manufacturing: www.elgenmfg.com.
Krueger: www.krueger-hvac.com.
Ruskin Company: www.ruskin.com.
Titus: www.titus-hvac.com.
Ward Industries by Commercial Products Group of Hart & Cooley, Inc: www.wardind.com.
Or equal performance.

Multi-blade device with blades aligned in short dimension; steel or aluminum construction; with individually adjustable blades, mounting straps.

BACKDRAFT DAMPERS - METAL

Manufacturers:
Louvers & Dampers, Inc.: www.louvers-dampers.com.
Nailor Industries Inc.: www.nailor.com.
Ruskin Company: www.ruskin.com.
Or equal performance.

Gravity Backdraft Dampers, Size 18 x 18 inches or Smaller, Furnished with Air Moving Equipment: Air moving equipment manufacturer's standard construction.

BACKDRAFT DAMPERS - FABRIC

Fabric Backdraft Dampers: Factory-fabricated, 18 gage, galvanized steel frame.
Blades: Neoprene coated fabric material.
Birdscreen: 1/2 inch nominal mesh of galvanized steel or aluminum.
Maximum Velocity: 1000 fpm (5 m/sec) face velocity.

DUCT ACCESS DOORS

Manufacturers:
Acudor Products Inc.: www.acudor.com.
Elgen Manufacturing: www.elgenmfg.com.
Nailor Industries Inc.: www.nailor.com.
Ruskin Company: www.ruskin.com.
SEMCO Incorporated: www.semcoinc.com.
Ward Industries by Commercial Products Group of Hart & Cooley, Inc: www.wardind.com.
Or equal performance.

Fabricate in accordance with SMACNA HVAC Duct Construction Standards and as indicated.

Access doors with sheet metal screw fasteners are not acceptable.

DUCT TEST HOLES

Temporary Test Holes: Cut or drill in ducts as required. Cap with neat patches, neoprene plugs, threaded plugs, or threaded or twist-on metal caps.

Permanent Test Holes: Factory fabricated, air tight flanged fittings with screw cap. Provide extended neck fittings to clear insulation.

FLEXIBLE DUCT CONNECTIONS

Fabricate in accordance with SMACNA HVAC Duct Construction Standards and as indicated.

Flexible Duct Connections: Fabric crimped into metal edging strip.

SMOKE DAMPERS

Manufacturers:
Louvers & Dampers, Inc.: www.louvers-dampers.com.

Nailor Industries Inc.: www.nailor.com.

Ruskin Company: www.ruskin.com.

Or equal performance.

Fabricate in accordance with NFPA 90A and UL 555S, and as indicated.

Dampers: UL Class 1 curtain type fire damper, normally open automatically operated by pneumatic actuator.

Electro Thermal Link: Fusible link melting at 165 degrees F; 120 volts, single phase, 60 Hz; UL listed and labeled.

VOLUME CONTROL DAMPERS

Manufacturers:

Louvers & Dampers, Inc.: www.louvers-dampers.com.

Nailor Industries Inc.: www.nailor.com.

Ruskin Company: www.ruskin.com.

Or equal performance.

Fabricate in accordance with SMACNA HVAC Duct Construction Standards and as indicated.

Splitter Dampers:

Material: Same gage as duct to 24 inches size in either direction, and two gages heavier for sizes over 24 inches.

Blade: Fabricate of single thickness sheet metal to streamline shape, secured with continuous hinge or rod.

Operator: Minimum 1/4 inch diameter rod in self aligning, universal joint action, flanged bushing with set screw.

Single Blade Dampers: Fabricate for duct sizes up to 6 x 30 inch.

Multi-Blade Damper: Fabricate of opposed blade pattern with maximum blade sizes 8 x 72 inch. Assemble center and edge crimped blades in prime coated or galvanized channel frame with suitable hardware.

Quadrants:

Provide locking, indicating quadrant regulators on single and multi-blade dampers.

On insulated ducts mount quadrant regulators on stand-off mounting brackets, bases, or adapters.

Where rod lengths exceed 30 inches provide regulator at both ends.

PART 3 EXECUTION

PREPARATION

Verify that electric power is available and of the correct characteristics.

INSTALLATION

Install accessories in accordance with manufacturer's instructions, NFPA 90A, and follow SMACNA HVAC Duct Construction Standards. Refer to Section 23 31 00 for duct construction and pressure class.

Provide backdraft dampers on exhaust fans or exhaust ducts nearest to outside and where indicated.

Provide duct test holes where indicated and required for testing and balancing purposes.

Provide fire dampers, combination fire and smoke dampers, and smoke dampers at locations indicated, where ducts and outlets pass through fire rated components, and where required by authorities having jurisdiction. Install with required perimeter mounting angles, sleeves, breakaway duct connections, corrosion resistant springs, bearings, bushings and hinges.

Install smoke dampers and combination smoke and fire dampers in accordance with NFPA 92.

Demonstrate re-setting of fire dampers to Owner's representative.

At fans and motorized equipment associated with ducts, provide flexible duct connections immediately adjacent to the equipment.

Provide balancing dampers at points on supply, return, and exhaust systems where branches are taken from larger ducts as required for air balancing. Install minimum 2 duct widths from duct take-off.

Use splitter dampers only where indicated.

END OF SECTION

PART 1 GENERAL

SECTION INCLUDES

Ceiling exhaust fans.

RELATED REQUIREMENTS

Section 23 05 00 - Basic Mechanical Materials and Methods.

Section 23 05 48 - Vibration and Seismic Controls for HVAC Piping and Equipment.

Section 23 33 00 - Air Duct Accessories: Backdraft dampers.

REFERENCE STANDARDS

AMCA 99 - Standards Handbook; Air Movement and Control Association International, Inc..

AMCA 204 - Balance Quality and Vibration Levels for Fans.

AMCA 210 - Laboratory Methods of Testing Fans for Aerodynamic Performance Rating; Air Movement and Control Association International, Inc.; 2007 (ANSI/AMCA 210, same as ANSI/ASHRAE 51).

AMCA (DIR) - [Directory of] Products Licensed Under AMCA International Certified Ratings Program; Air Movement and Control Association International, Inc..

AMCA 300 - Reverberant Room Method for Sound Testing of Fans; Air Movement and Control Association International, Inc..

AMCA 301 - Methods for Calculating Fan Sound Ratings from Laboratory Test Data; Air Movement and Control Association International, Inc..

SUBMITTALS

See Section 23 05 00 - Basic Mechanical Materials and Methods, for submittal procedures.

Product Data: Provide data on fans and accessories including fan curves with specified operating point clearly plotted, power, RPM, sound power levels at rated capacity, and electrical characteristics and connection requirements.

Manufacturer's Instructions: Indicate installation instructions.

Maintenance Data: Include instructions for lubrication, motor and drive replacement, spare parts list, and wiring diagrams.

Maintenance Materials: Furnish the following for Owner's use in maintenance of project.

- See Section 23 05 00 - Basic Mechanical Materials and Methods, for additional provisions.
- Extra Fan Belts: One set for each individual fan.

Maintain one copy of each document on site.

QUALITY ASSURANCE

Manufacturer Qualifications: Company specializing in manufacturing the type of products specified in this section, with minimum three years of documented experience.

Installer Qualifications:Company specializing in performing Work of this section with minimum three years documented experience.

FIELD CONDITIONS

Permanent ventilators may not be used for ventilation during construction.

PART 2 PRODUCTS

MANUFACTURERS

Greenheck: www.greenheck.com.

Loren Cook Company: www.lorencook.com.

PennBarry: www.pennbarry.com.

Or equal performance.

POWER VENTILATORS - GENERAL

Static and Dynamically Balanced: AMCA 204 - Balance Quality and Vibration Levels for Fans.

Performance Ratings: Determined in accordance with AMCA 210 and bearing the AMCA Certified Rating Seal.

Sound Ratings: AMCA 301, tested to AMCA 300, and bearing AMCA Certified Sound Rating Seal.

Fabrication: Conform to AMCA 99.

Electrical Components: Listed and classified by Underwriters Laboratories Inc. as suitable for the purpose specified and indicated.

CABINET AND CEILING EXHAUST FANS

Centrifugal Fan Unit: V-belt or direct driven with galvanized steel housing lined with acoustic insulation, resilient mounted motor, gravity backdraft damper in discharge.

Disconnect Switch: Cord and plug in housing for thermal overload protected motor and wall mounted switch.

Grille: Molded white plastic.

Sheaves: Cast iron or steel, dynamically balanced, bored to fit shafts and keyed; variable and adjustable pitch motor sheaves selected so required rpm is obtained with sheaves set at mid-position; fan shaft with self-aligning pre-lubricated ball bearings.

PART 3 EXECUTION

EXAMINATION

Field verify measurements prior to fabrication and installation.

Verify roof curbs are installed and dimensions are as instructed by manufacturer.

PREPARATION

Furnish roof curbs to Section 07 72 00 for installation.

INSTALLATION

Install in accordance with manufacturer's instructions.

Hung Cabinet Fans:

Install fans with resilient mountings and flexible electrical leads. Refer to Section 23 05 48.

Install flexible connections specified in Section 23 33 00 between fan and ductwork. Ensure metal bands of connectors are parallel with minimum one inch flex between ductwork and fan while running.

Provide sheaves required for final air balance.

Install backdraft dampers on inlet to roof and wall exhausters.

Install backdraft dampers on gravity ventilators used in relief applications.

Install safety screen where fan inlet or outlet is exposed.

Pipe scroll drains to nearest floor drain.

Install backdraft dampers on discharge of exhaust fans and as indicated on Drawings.

Provide sheaves required for final air balance.

Install fans with resilient mountings and flexible electrical leads. Install flexible connectors specified between fan inlet and discharge ductwork. Flexible connectors shall no be in tension while running.

Demonstrate fan operation and maintenance procedures.

Do not operate fans continuously until ductwork is clean, filters in place, bearings lubricated, and fan has been test run under observation.

END OF SECTION

PART 1 GENERAL

SECTION INCLUDES

Packaged roof top unit.

Unit controls.

Roof mounting curb and base.

REFERENCE STANDARDS

AHRI 210/240 - Standard for Performance Rating of Unitary Air Conditioning and Air-Source Heat Pump Equipment; Air-Conditioning, Heating, and Refrigeration Institute.

AHRI 270 - Sound Rating of Outdoor Unitary Equipment; Air-Conditioning, Heating, and Refrigeration Institute.

NFPA 90A - Standard for the Installation of Air-Conditioning and Ventilation Systems; National Fire Protection Association.

SUBMITTALS

See Section 23 05 00 - Basic Mechanical Materials and Methods, for submittal procedures.

Product Data: Provide capacity and dimensions of manufactured products and assemblies required for this project. Indicate electrical service with electrical characteristics and connection requirements, and duct connections.

Shop Drawings: Indicate capacity and dimensions of manufactured products and assemblies required for this project. Indicate electrical service with electrical characteristics and connection requirements, and duct connections.

Manufacturer's Instructions: Indicate assembly, support details, connection requirements, and include start-up instructions.

Operation and Maintenance Data: Include manufacturer's descriptive literature, operating instructions, installation instructions, maintenance and repair data, and parts listing.

Warranty: Submit manufacturer's warranty and ensure forms have been filled out in Owner's name and registered with manufacturer.

Maintenance Materials: Furnish the following for Owner's use in maintenance of project.

See Section 23 05 00 - Basic Mechanical Materials and Methods, for additional provisions.

Extra Filters: One set for each unit.

Maintain one copy of each document on site.

QUALITY ASSURANCE

Manufacturer Qualifications: Company specializing in manufacturing the type of products specified in this section, with minimum three years of documented experience.

Installer Qualifications: Company specializing in performing Work of this section with minimum

Products Requiring Electrical Connection: Listed and classified by Underwriters Laboratories Inc. as suitable for the purpose specified and indicated.

DELIVERY, STORAGE, AND HANDLING

Protect units from physical damage by storing off site until roof mounting curbs are in place, ready for immediate installation of units.

WARRANTY

Provide a one year warranty to include coverage for refrigeration compressors.

PART 2 PRODUCTS

MANUFACTURERS

Carrier Corporation: www.carrier.com

Trane, Inc.: www.trane.com.

York International Corporation/Johnson Controls: www.york.com.

Or approved substitution.

AIR CONDITIONING UNITS

General: Roof mounted units having gas burner and electric refrigeration.

Description: Self-contained, packaged, factory assembled and prewired, consisting of cabinet and frame, supply fan, heat exchanger and burner, controls, air filters, refrigerant cooling coil and compressor completely contained within cabinet, condenser coil, hail guards, and condenser fan.

Disconnect Switch: Factory mount disconnect switch on equipment under provisions of Section 26 27 17.

FABRICATION

Packaged Rooftop Units: To conform to NEMA 3-R, including protection against windblown dust/sand. Manufacturer shall include such provisions as industrial gasketing and compression latches on negatively pressurized compartments, particulate filtration of OSA penetrations (OSA intake and EA relief), and sealing of all exterior penetrations that would compromise the dust-tight integrity of the unit, in both positively and negatively pressurized cabinet sections.

Cabinet: Galvanized steel with baked enamel finish, including access doors with piano hinges and locking handle. Structural members shall be minimum 18 gage, with access doors or panels of minimum 20 gage.

Insulation: one inch thick neoprene coated glass fiber with edges protected from erosion.

Heat Exchangers: Aluminized steel, of welded construction.

Supply Fan: Forward curved centrifugal type, resiliently mounted with V-belt drive, adjustable variable pitch motor pulley, variable frequency drive, and rubber isolated hinge mounted high efficiency motor. Isolate complete fan assembly. Refer to Section 22 05 48.

Air Filters: 2 inch thick glass fiber disposable media in metal frames. Refer to Section 23 40 00.

Roof Mounting Curb: 14 inches high galvanized steel, channel frame with gaskets, nailer strips.

BURNER

Gas Burner: Induced draft type burner with adjustable combustion air supply, pressure regulator, gas valves, manual shut-off, intermittent spark or glow coil ignition, flame sensing device, and automatic 100 percent shut-off pilot.

Gas Burner Safety Controls: Energize ignition, limit time for establishment of flame, prevent opening of gas valve until pilot flame is proven, stop gas flow on ignition failure, energize blower motor, and after air flow proven and slight delay, allow gas valve to open.

High Limit Control: Temperature sensor with fixed stop at maximum permissible setting, de-energize burner on excessive bonnet temperature and energize burner when temperature drops to lower safe value.

Supply Fan Control: Temperature sensor sensing bonnet temperatures and independent of burner controls, with provisions for continuous fan operation.

EVAPORATOR COIL

Provide copper tube aluminum fin coil assembly with galvanized drain pan and connection.

Provide capillary tubes or thermostatic expansion valves for units of 6 tons capacity and less, and thermostatic expansion valves and alternate row circuiting for units 7.5 tons cooling capacity and larger.

COMPRESSOR

Provide hermetic compressors, 3600 rpm maximum, resiliently mounted with positive lubrication, crankcase heater, high and low pressure safety controls, motor overload protection, suction and discharge service valves and gage ports, and filter drier.

Outdoor thermostat to energize compressor above 35 degrees F ambient.

Provide step capacity control by cycling compressors.

CONDENSER COIL

Provide copper tube aluminum fin coil assembly with subcooling rows and coil guard.

Provide direct drive propeller fans, resiliently mounted with fan guard, motor overload protection, wired to operate with compressor. Provide high efficiency fan motors.

Provide refrigerant pressure switches to cycle condenser fans.

MIXED AIR CASING

Dampers: Provide outside, return, and relief dampers with damper operator and control package to automatically vary outside air quantity. Outside air damper to fall to closed position. Relief dampers may be gravity balanced.

Gaskets: Provide tight fitting dampers with edge gaskets.

Damper Operator: 24 volt with gear train sealed in oil.

Mixed Air Controls: Maintain selected supply air temperature and return dampers to minimum position on call for heating and above 75 degrees F ambient, or when ambient air temperature exceeds return air temperature.

OPERATING CONTROLS - SINGLE ZONE UNITS

Electric solid state microcomputer based room thermostat, located as indicated in service area with remote sensor located as indicated.

Room thermostat shall incorporate:

- Automatic switching from heating to cooling.
- Set-up for four separate temperatures per day.
- Instant override of set point for continuous or timed period from one hour to 31 days.
- Short cycle protection.
- Programming based on weekdays, Saturday and Sunday.

Room thermostat display shall include:

- Time of day.
- Actual room temperature.
- Programmed temperature.
- Programmed time.
- Duration of timed override.
- Day of week.
- System model indication: heating, cooling, auto, off, fan auto, fan on.

PART 3 EXECUTION

EXAMINATION

Verify that roof is ready to receive work and opening dimensions are as indicated on shop drawings.

Verify that proper power supply is available.

INSTALLATION

Install in accordance with manufacturer's instructions.

Mount units on factory built roof mounting curb providing watertight enclosure to protect ductwork and utility services. Install roof mounting curb level.

SYSTEM STARTUP

Prepare and start equipment. Adjust for proper operation.

CLOSEOUT ACTIVITIES

Demonstrate operation to Owner's maintenance personnel.

MAINTENANCE

Provide service and maintenance of packaged roof top units from building Substantial completion until commencement of warranty period. See Section 01 10 00, Paragraph 1.66 Warranty.

Provide routine maintenance service with a two month interval as maximum time period between calls.

Include maintenance items as outlined in manufacturer's operating and maintenance data, including minimum of six filter replacements, minimum of one fan belt replacement, and controls check-out, adjustments, and recalibration.

Provide 24-hour emergency service on breakdowns and malfunctions.

After each service call, submit copy of service call work order or report that includes description of work performed.

END OF SECTION

PART 1 GENERAL

SECTION INCLUDES

Forced air furnaces.

Air cooled condensing units.

Controls.

REFERENCE STANDARDS

AHRI 210/240 - Standard for Performance Rating of Unitary Air Conditioning and Air-Source Heat Pump Equipment; Air-Conditioning, Heating, and Refrigeration Institute.

AHRI 520 - Performance Rating of Positive Displacement Condensing Units; Air-Conditioning, Heating, and Refrigeration Institute.

ASHRAE Std 15 - Safety Standard for Refrigeration Systems; American Society of Heating, Refrigerating and Air-Conditioning Engineers, Inc.; 2010 (ANSI/ASHRAE Std 15).

ASHRAE Std 23.1 - Methods of Testing for Rating Positive Displacement Refrigerant Compressors and Condensing Units; American Society of Heating, Refrigerating and Air-Conditioning Engineers, Inc..

NFPA 90A - Standard for the Installation of Air-Conditioning and Ventilating Systems; National Fire Protection Association.

NFPA 90B - Standard for the Installation of Warm Air Heating and Air Conditioning Systems; National Fire Protection Association.

SUBMITTALS

See Section 23 05 00 - Basic Mechanical Materials and Methods, for submittal procedures.

Product Data: Provide rated capacities, weights, accessories, electrical nameplate data, and wiring diagrams.

Shop Drawings: Indicate assembly, required clearances, and location and size of field connections.

Design Data: Indicate refrigerant pipe sizing.

Manufacturer's Instructions: Indicate rigging, assembly, and installation instructions.

Project Record Documents: Record actual locations of components and connections.

Operation and Maintenance Data: Include manufacturer's descriptive literature, operating instructions, installation instructions, maintenance and repair data, and parts listing.

Warranty: Submit manufacturers warranty and ensure forms have been filled out in Owner s name and registered with manufacturer.

Maintenance Materials: Furnish the following for Owner's use in maintenance of project.

- Extra Filters: One for each unit.
- Extra Pilot Thermocouples: One for each unit.

QUALITY ASSURANCE

Manufacturer Qualifications: Company specializing in manufacturing the type of products specified in this section, with minimum three years of documented experience.

Installer Qualifications: Company specializing in performing the work of this section with minimum 3 years of experience and approved by manufacturer.

WARRANTY

Provide three year manufacturers warranty for solid state ignition modules.

Provide five year manufacturers warranty for heat exchangers.

PART 2 PRODUCTS

MANUFACTURERS

Carrier Corporation: www.carrier.com.

Trane Inc: www.trane.com.

York International Corporation / Johnson Controls: www.york.com.

Mitsubishi.

SYSTEM DESIGN

Split-System Heating and Cooling Units: Self-contained, packaged, matched factory-engineered and assembled, pre-wired indoor and outdoor units; UL listed.

Heating and Cooling: Air-source electric heat pump located in outdoor unit with evaporator.

Provide refrigerant lines internal to units and between indoor and outdoor units, factory cleaned, dried, pressurized and sealed, with insulated suction line.

Performance Requirements: See Schedule for all requirements.

INDOOR UNITS FOR DUCTED SYSTEMS

Indoor Units: Self-contained, packaged, factory assembled, pre-wired unit consisting of cabinet, supply fan, heating and cooling element(s), controls, and accessories; wired for single power connection with control transformer.

Air Flow Configuration: Horizontal.

Cabinet: Steel with baked enamel finish, easily removed and secured access doors with safety interlock switches, glass fiber insulation with reflective liner.

Supply Fan: Centrifugal type rubber mounted with direct or belt drive with adjustable variable pitch motor pulley.

Motor: NEMA MG 1; 1750 rpm single speed, permanently lubricated, hinge mounted.

Motor Electrical Characteristics:

Air Filters: 1 inch thick urethane, washable type arranged for easy replacement.

Evaporator Coils: Copper tube aluminum fin assembly, galvanized or polymer drain pan sloped in all directions to drain, drain connection, refrigerant piping connections, restricted distributor or thermostatic expansion valve.

Construction and Ratings: In accordance with AHRI 210/240 and UL listed.

Manufacturers: System manufacturer.

OUTDOOR UNITS

Outdoor Units: Self-contained, packaged, pre-wired unit consisting of cabinet, with compressor and condenser.

Comply with AHRI 210.

Refrigerant: R-410A.

Cabinet: Galvanized steel with baked enamel finish, easily removed and secured access doors with safety interlock switches, glass fiber insulation with reflective liner.

Construction and Ratings: In accordance with AHRI 210/240 with testing in accordance with ASHRAE Std 23 and UL listed.

Compressor: AHRI 520; hermetic, two speed 1800 and 3600 rpm, resiliently mounted integral with condenser, with positive lubrication, crankcase heater, high pressure control, motor overload protection, service valves and drier. Provide time delay control to prevent short cycling and rapid speed changes.

Air Cooled Condenser: ARI 520; Aluminum fin and copper tube coil, with direct drive axial propeller fan resiliently mounted, galvanized fan guard.

Accessories: Filter drier, high pressure switch (manual reset), low pressure switch (automatic reset), service valves and gage ports, thermometer well (in liquid line).

Provide thermostatic expansion valves.

Operating Controls:

Control by room thermostat to maintain room temperature setting.

GAS FURNACE COMPONENTS

Burner: Atmospheric type with adjustable combustion air supply,

Gas valve, two stage provides 100 percent safety gas shut-off; 24 volt combining pressure regulation, safety pilot, manual set (On-Off), pilot filtration, automatic electric valve.

Combustion air damper with synchronous spring return damper motor.

Non-corrosive combustion air blower with permanently lubricated motor.

Burner Safety Controls:

Thermocouple Sensor: Prevents opening of gas valve until pilot flame is proven and stops gas flow on ignition failure.

Flame Rollout Switch: Installed on burner box and prevents operation.

Vent Safety Shutoff Sensor: Temperature sensor installed on draft hood and prevents operation, manual reset.

Limit Control: Fixed stop at maximum permissible setting, de-energizes burner on excessive bonnet temperature, automatic resets.

Operating Controls:

Cycle burner by room thermostat to maintain room temperature setting.

Supply fan energized from bonnet temperature independent of burner controls, with adjustable timed off delay and fixed timed on delay, with manual switch for continuous fan operation.

ACCESSORY EQUIPMENT

Economizer Damper Units: Steel cabinet with baked enamel finish, easily removed and secured access doors, glass fiber insulation.

Dampers: Formed steel with nylon bearings and gaskets.

Damper Operator: 24 volt, three position spring return motor with adjustable minimum position switch.

Control Wiring: Provide wiring harness consisting of control board with relays, wiring harness, transformer, and hardware.

Controls: Discharge air thermostat, adjustable outdoor air "enthalpy" control, return air "enthalpy" sensor position dampers, and interface to room thermostat.

Room Thermostat: Wall-mounted, electric solid state microcomputer based room thermostat with remote sensor to maintain temperature setting; low-voltage; with following features:

Automatic switching from heating to cooling.

Preferential rate control to minimize overshoot and deviation from setpoint.

Thermostat display:

Time of day.

Actual room temperature.

Programmed temperature.

Day of week.

System mode indication: heating, cooling, fan auto, off, and on, auto or on, off.

PART 3 EXECUTION

EXAMINATION

Verify that substrates are ready for installation of units and openings are as indicated on shop drawings.

Verify that proper power supply is available and in correct location.

Verify that proper fuel supply is available for connection.

INSTALLATION

Install in accordance with manufacturer's instructions and requirements of local authorities having jurisdiction.

Install in accordance with NFPA 90A and NFPA 90B.

Install refrigeration systems in accordance with ASHRAE Std 15.

Pipe drain from [condensate drain] to nearest floor drain or piping drain connection.

MAINTENANCE

Provide service and maintenance of split system units from building Substantial completion until commencement of warranty period. See Section 01 10 00, Paragraph 1.66 Warranty.

Provide routine maintenance service with a two month interval as maximum time period between calls.

Include maintenance items as outlined in manufacturer's operating and maintenance data, including minimum of six filter replacements, minimum of one fan belt replacement, and controls check-out, adjustments, and recalibration.

Provide 24-hour emergency service on breakdowns and malfunctions.

After each service call, submit copy of service call work order or report that includes description of work performed.

END OF SECTION

PART GENERAL

SUMMARY

Section includes

Electrical Basic Requirements specifically applicable to Division 26, 27, and 28 in addition to the requirements of Division 01 - General Requirements and the General Conditions of the Contract.

Grounding electrodes and conductors

Bonding methods and materials

Conduit and equipment supports

Anchors and fasteners

Nameplates and wire markers.

RELATED SECTIONS

Work described in this section is related to other work described in Divisions 21, 22, 23, 26, 27, and 28 and may be related to work in other Divisions concerning structure or appearances. Review and become familiar with work required in other Sections in this Division and with work required in the other Divisions. Coordinate with other subcontractor(s) to assure that all issues arising between related Sections are resolved.

Bring to the attention of the Engineer prior to the cutoff date for Addenda any and all discrepancies in related work. Submission of a bid or proposal indicates that all costs for this work and related work are included in the bid for this work or within the bid or proposal for the related work.

SYSTEM DESCRIPTION

Grounding systems use metal frame of building and driven ground rod as grounding electrodes. Grounding system connections use mechanical fasteners.

Select materials, sizes, and types of anchors, fasteners, and supports to carry loads of equipment and raceway, including weight of wire and cable in raceway. Anchor and fasten electrical products to building elements and finishes as follows:

Identify Electrical components as follows:

Nameplate for each electrical distribution and control equipment enclosure.

Wire marker for each conductor at panelboard gutters, pull boxes, and outlet and junction boxes.

REGULATORY REQUIREMENTS

All electrical work shall be performed in strict accordance with the New Mexico Building codes, IBC, ANSI, NEC, NFPA, Model Energy Code, and all applicable provisions of the local authorities having jurisdiction. All materials and labor necessary to comply with rules, regulations, and ordinances shall be provided. Where the drawings and/or specifications indicate material or construction in excess of code requirements or visa-versa, the more stringent application shall govern.

Permits necessary for the performance of the work under this contract shall be secured and paid for by the Contractor. Final inspection by the Engineer will not be made, or certificate of final payment issued, until certificates of satisfactory inspection from the inspection authorities are delivered.

SUBMITTALS

Submit all data as a single package, as the Engineer will commence review only when all data has been received.

Submittal form to identify project, contractor, sub-contractor, supplier, and pertinent contract document references.

Apply Contractor's stamp, signed or initialed, certifying that review, verification of products required, field dimensions, adjacent construction work, and coordination of information is in accordance with the requirements of the work and contract documents.

The Contractor shall determine and verify field measurements and field construction criteria for conformance with drawings and specifications and for conflicts with other items of construction, past or present. He shall coordinate each submittal with the requirements of the work and of the contract documents and notify the Engineer in writing, at the time of the submission, of any and all deviations in the submittals from requirements of the work and contract documents.

No fabrication or work, which requires submittals, shall begin until submittals are returned with the Engineer's approval.

Identify variations for contract documents and product or system limitations, which may be detrimental to successful performance of the completed work.

Engineer's review does not constitute acceptance or responsibility for accuracy or dimensions, nor shall it relieve the Contractor from meeting any requirements of the work and contract documents, nor shall it constitute approval for any deviation from the contract documents, unless such deviations are specifically stated as such on the submittal and specifically allowed by the Engineer by specific written notification for each such variation. The Engineer's review will not relieve the Contractor from responsibility for errors or omissions in the shop drawings.

Revise and resubmit submittals as required. Identify all changes made since previous submittal.

The Engineer will review a submittal and, if necessary, a resubmittal of the same item. Subsequent resubmittals shall be accompanied by Contractor's purchase order to Engineer for all Engineer's review time and costs at Engineer's standard hourly billing rates. These reviews will be performed at the convenience of the Engineer.

SUBSTITUTIONS

Prior approval of materials and equipment will not be considered. Contract documents indicate specified equipment and acceptable alternatives. Any other equipment/material proposed must meet or exceed that specified. Equipment/material will be reviewed for compliance during submittal review process per Paragraph 1.5.

Engineer will consider requests for substitutions only at submittal review. Clearly identify substitution.

Document each request with complete data, substantiating compliance of proposed substitution with contract documents.

A request for substitution constitutes a representation that the Contractor:

Has investigated the proposed product and determined that it meets or exceeds the quality level of the specified product.

Will provide the same warranty for the substitution as for the specified product.

Will coordinate installation and make changes to other work, which may be required for the work to be complete with no additional cost to Owner.

Waives claims for additional costs or time extension which may, subsequently, become apparent.

Will reimburse Owner and Architect/Engineer for review or redesign services associated with re-approval by authorities.

PROJECT CONDITIONS

Existing project conditions indicated on Drawings are based on casual field observation.

Verify field measurements and circuiting arrangements are as shown on Drawings.

Verify removal of existing electric work.

Report discrepancies to Architect/Engineer before disturbing existing installation.

COORDINATION

Obtain and review shop drawings, product data, and manufacturer’s instructions for equipment furnished under other Sections to determine connection locations and requirements.

Sequence rough-in of electrical connections to coordinate with installation and start-up of equipment furnished under other Sections.

RECORD AS-BUILT DRAWINGS

Maintain on site one set of record documents exclusively for the purpose of record as-built drawings.

Record into Record Drawings, Project Manual and Product Data, the actual “as-built” Work including all revisions. Include actual location of all work.

Record information concurrent with the construction progress.

Ensure entries are complete and accurate, enabling future references by Owner.

Completion of record as-built drawings is a condition of final inspection and consideration of final payment.

CLOSEOUT PROCEDURES

See Paragraph 3.2 for Substantial Completion and Final Inspection Requirements.

PART 2 PRODUCTS

ROD ELECTRODES

Product Description: Copper or copper-clad steel, 1/2 inch diameter rod electrode, 10 feet in length.

WIRE MARKERS

Product Description: Cloth tape, split sleeve, or tubing type wire markers with circuit or control wire number permanently stamped or printed.

PART 3 EXECUTION

INSTALLATION

Install products in accordance with manufacturer's instructions.

Install rod electrodes at locations indicated. Install additional rod electrodes as required to meet Regulatory Requirements.

Provide grounding electrode conductor and connect to reinforcing steel in foundation footing where indicated. Bond steel together.

Provide bonding to meet Regulatory Requirements.

Make electrical connections to utilization equipment in accordance with equipment manufacturer's instructions.

- Verify that wiring and outlet rough-in work is complete and that utilization equipment is ready for electrical connection, wiring, and energization.
- Make wiring connections in control panel or in wiring compartment of pre-wired equipment. Provide interconnecting wiring where indicated.
- Install and connect disconnect switches, controllers, control stations, and control devices as indicated.
- Make conduit connections to equipment, using flexible conduit. Use liquid-tight flexible conduit in damp or wet locations.
- Install pre-fabricated cord set where connection with attachment plug is indicated or specified, or use attachment plug with suitable strain-relief clamps.
- Provide suitable strain-relief clamps for cord connections to outlet boxes and equipment connection boxes.

Install support systems sized and fastened to accommodate weight of equipment and conduit, including wiring, which they carry.

- Fasten hanger rods, conduit clamps, and outlet and junction boxes to building structure using expansion anchors.
- Use toggle bolts or hollow wall fasteners in hollow masonry, plaster, or gypsum board partitions and walls; expansion anchors or preset inserts in solid masonry walls; self-drilling anchors or expansion

anchor on concrete surfaces; sheet metal screws in sheet metal studs; and wood screws in wood construction.

Do not fasten supports to piping, ceiling support wires, ductwork, mechanical equipment, or conduit.

Do not use powder-actuated anchors.

Do not drill structural steel members.

Fabricate supports from structural steel or formed steel members.

Install free-standing electrical equipment on concrete pads.

Install surface-mounted cabinets and panelboards with minimum of four (4) anchors.

Install steel channel supports to stand cabinets 1 inch off wall in wet locations.

Install sheet metal channel to bridge studs above and below cabinets and panelboards recessed in hollow partitions.

Identify electrical distribution and control equipment and loads served to meet regulatory requirements.

Degrease and clean surfaces to receive nameplates and tape labels.

Install nameplate parallel to equipment lines. Secure nameplate to equipment front using screws or rivets. Secure nameplate to inside face of recessed pannelboard doors in finished locations.

Install wire markers on each conductor in panelboard gutters, pull boxes, outlet and junction boxes, and at load connections.

Use branch circuit or feeder number to identify power and lighting circuits.

Use control wire number as indicated on schematic and interconnection diagrams to identify control wiring.

SUBSTANTIAL COMPLETION AND FINAL INSPECTION REQUIREMENTS

Before substantial completion can be granted, the following items must be completed and/or submitted to the Owner/Engineer.

Test, adjust, and calibrate all systems.

Provide typed panel directories installed in each panelboard.

Label all electrical equipment properly.

Prior to the final inspection or consideration of final payment, the Contractor shall:

Provide copies of permits and/or inspection certificates.

Provide Record As-built Drawings.

Deliver all spare parts.

Touch up any damaged finishes.

END OF SECTION

PART 1 GENERAL

SUMMARY

Section includes:

- Building wire and cable.
- Conduit and tubing
- Surface raceway.
- Boxes
- Wiring devices
- Wiring connectors
- Connections.

RELATED SECTIONS

See Section 26 05 00 - Basic Electrical Materials and Methods.

SYSTEM DESCRIPTION

Wiring Products:

- Solid conductor for feeders and branch circuits 10 AWG and smaller.
- Stranded conductors for control circuits.
- Conductor not smaller than 12 AWG for power and lighting circuits.
- Conductor not smaller than 16 AWG for control circuits.
- 10 AWG conductors for 20 ampere, 120 volt branch circuits longer than 75 feet.

Wiring Methods:

- Concealed Dry Interior Locations: Building wire, Type THW THHN/THWN insulation, in raceway. Nonmetallic-sheathed cable. Armored cable. Metal clad cable.
- Exposed Dry Interior Locations: Building wire, Type THW THHN/THWN insulation, in raceway. Nonmetallic-sheathed cable. Armored cable. Metal clad cable.
- Above Accessible Ceilings: Building wire, Type THW THHN/THWN insulation, in raceway. Nonmetallic-sheathed cable. Armored cable. Metal clad cable.
- Wet or Damp Interior Locations: Building wire, Type THW THHN/THWN insulation, in raceway. direct burial cable. Armored cable with jacket. Metal clad cable.
- Exterior Locations: Building wire, Type THW THHN/THWN insulation, in raceway. direct burial cable. Armored cable with jacket. Metal clad cable. Service-entrance cable.
- Underground Locations: Building wire, Type THW THHN/THWN insulation, in raceway. direct burial cable. Armored cable with jacket. Metal clad cable. Service-entrance cable.
- Conductor sizes are based on copper unless indicated as aluminum or "AL". When aluminum conductor is substituted for copper conductor, size to match circuit requirements for conductor ampacity and voltage drop.
- Raceway and boxes are located as indicated on Drawings, and at other locations where required for splices, taps, wire pulling, equipment connections, and compliance with regulatory requirements.

Raceway Products:

- Underground More than 5 Feet outside Foundation Wall: Use rigid steel conduit and thickwall nonmetallic conduit. Use cast metal boxes or nonmetallic handhole.
- Underground Within 5 Feet outside Foundation Wall: Use rigid steel conduit and thickwall nonmetallic conduit. Use cast metal boxes.
- In or Under Slab on Grade: Use rigid steel conduit and thickwall nonmetallic conduit. Use cast metal boxes.
- Outdoor Locations, Above Grade: Use rigid steel conduit and electrical metallic tubing. Use cast metal outlet, pull, and junction boxes.

In Slab Above Grade: Use rigid steel conduit and thickwall nonmetallic conduit. Use cast sheet metal boxes.

Wet and Damp Locations: Use rigid steel conduit, electrical metallic tubing, thickwall nonmetallic conduit and, nonmetallic tubing. Use cast metal or nonmetallic outlet, junction, and pull boxes. Use flush mounting outlet box in finished areas.

Concealed Dry Locations: Use rigid steel and aluminum conduit, electrical metallic tubing, thickwall nonmetallic conduit and nonmetallic tubing. Use sheet-metal boxes. Use flush mounting outlet box in finished areas. Use hinged enclosure for large pull boxes.

Exposed Dry Locations: Use rigid steel and aluminum conduit, electrical metallic tubing and thickwall nonmetallic conduit. Use sheet-metal boxes. Use flush mounting outlet box in finished areas. Use hinged enclosure for large pull boxes.

Minimum Raceway Size: 3/4 inch unless otherwise specified.

CLOSEOUT SUBMITTALS

Project Record Documents: See Section 26 05 00.

Accurately record routing of conduits larger than 2 inches.

QUALITY ASSURANCE

Perform work in accordance with NECA Standard of Installation.

REGULATORY REQUIREMENTS

Conform to requirement of NFPA 70.

Furnish products listed by Underwriters Laboratories, Inc. or other testing firm acceptable to authority having jurisdiction.

PART 2 PRODUCTS

CONDUIT AND FITTINGS

Conduit:

Metal conduit and tubing: Galvanized steel.

Flexible conduit: Steel jacket only.

Liquid-tight flexible conduit: Flexible conduit with PCV jacket.

Plastic conduit and tubing: NEMA TC 2; PVC. Use Schedule 40 conduit.

RGS or IMC, 90 degree bends. PVC is not acceptable.

Conduit fittings:

Metal fittings and conduit bodies: NEMA FB 1.

Plastic fittings and conduit bodies: NEMA TC 3.

SURFACE METAL RACEWAY

Product Description: Sheet metal channel with fitted cover, suitable for use as surface metal raceway, with manufacturer’s standard enamel finish. Furnish manufacturer's standard accessories; match finish on raceway.

ELECTRICAL BOXES

Boxes:

Sheet Metal: NEMA OS 1; Galvanized steel.

Cast Metal: Aluminum, deep type, gasket cover, threaded hubs.

Non-metallic: NEMA OS 2.

Hinged Cover Enclosures: NEMA 250; Type 1, steel enclosure with manufacturer's standard enamel finish and continuous hinge cover, held closed by flush latch operable by screwdriver.

WIREWAY

Product Description: General purpose Raintight type wireway with hinged screw cover and manufacturer's standard enamel finish.

WALL SWITCHES

Single Pole Switch:
- Hubbell 1221-I
- Pass & Seymour 660 IG
- Or equal performance.

Double Pole Switch:
- Hubbell 1222-I
- Pass & Seymour
- Or equal performance.

Color: Selected by Owner/Architect.

RECEPTACLES

Single Convenience Receptacle:
- Leviton 5361-I
- Pass & Seymour 26261-I
- Or equal performance.

Duplex Convenience Receptacle:
- Hubbell 5362
- Pass & Seymour 885-I
- Or equal performance.

GFCI Receptacle:
- Hubbell GF5362
- Pass & Seymour 2091-I
- Or equal performance.

Color: Selected by Owner/Architect.

WALL PLATES

Manufacturers: to match device

Cover Plate: Nylon or Stainless Steel. Finish selection by architect.

Jumbo Cover Plate: Smooth plastic nylon. Smooth stainless steel. Finish selection by architect

Weatherproof Cover Plate: Gasketed cast metal Stainless steel plate with hinged threaded and gasketed device cover.

SERVICE FITTINGS

Receptacle service fitting:
- Walker S125R
- Or equal performance
- Housing: Zinc die cast material
- Device plate: Polycarbonate
- Configuration: One duplex

Communication outlet service fitting:
- Walker S126R
- Or equal performance
- Housing: Zinc die cast material
- Device plate: Polycarbonate

Configuration: Telephone/data combination
Combination fitting:
Walker S265
Or equal performance
Housing: Zinc die cast material
Device plate: Polycarbonate
Configuration: One duplex receptacle, telephone/data combination

PART 3 EXECUTION

EXAMINATION AND PREPARATION

Verify that supporting surfaces are ready to receive work.
Verify that interior of building is physically protected from weather.
Verify that mechanical work, which is likely to injure conductors, has been completed.
Completely and thoroughly swab raceway system before installing conductors.
Electrical boxes are shown on drawings in approximate locations unless dimensioned.
Obtain verification from Architect and/or Owner of floor box locations, and locations of outlets in offices and work areas prior to rough-in.

INSTALLATION

Route raceway and cable to meet Project conditions.
Set wall mounted boxes at elevations to accommodate mounting heights indicated.
Adjust box location up to 10 feet prior to rough-in when required to accommodate intended purpose.
Arrange conduit to maintain headroom and to present neat appearance.
Route exposed raceway parallel and perpendicular to walls and adjacent piping.
Maintain minimum 6 inch clearance to piping and 12 inch clearance to heat surfaces, such as flues, steam pipes, and heating appliances.
Maintain required fire, acoustic, and vapor barrier rating when penetrating walls, floors, and ceilings.
Route conduit through roof openings for piping and ductwork where possible. Otherwise, route through roof jack with pitch pocket.
Group in parallel runs where practical. Use rack constructed of steel channel. Maintain spacing between raceways or derate circuit ampacities to NFPA 70 requirements.
Use conduit hangers and clamps. Do not fasten with wire or perforated pipe straps.
Use conduit bodies to make sharp changes in direction.
Terminate conduit stubs with insulated bushings.
Use suitable caps to protect installed raceway against entrance of dirt and moisture.
Provide No. 12 AWG insulated conductor or suitable pull string in empty raceways, except sleeves and nipples.
Install expansion joints where raceway crosses building expansion joints.
Install plastic conduit and tubing in accordance with manufacturer's instructions.
Install auxiliary gutter and wireway in accordance with manufacturer's instructions.
Install electrical boxes as shown on the drawings and as required for splices, taps, wire pulling, equipment connections, and regulatory requirements.
Use cast outlet box in exterior locations exposed to weather and wet locations.
Use hinged cover enclosure for interior pull and junction box larger than 12 inches in any dimension.
Locate and install electrical boxes to allow access. Provide access panels if required.
Locate and install electrical boxes to maintain headroom and to present neat mechanical appearance.
Install pull boxes and junction boxes above accessible ceilings or in unfinished areas.

Provide knockout closures for unused openings.

Align wall-mounted outlet boxes for switches, thermostats, and similar devices.

Coordinate mounting heights and locations of outlets above counters, benches, and backsplashes.

Install lighting outlets to locate luminaries as shown on reflected ceiling plan.

Use recessed outlet boxes in finished areas and where indicated.

Secure boxes to interior wall and partition studs, accurately positioning to allow for surface finish thickness.

Use stamped steel stud bridges for flush outlets in hollow stud wall and adjustable steel channel fasteners for flush ceiling outlet boxes.

Locate boxes in masonry walls to require cutting corner only. Coordinate masonry cutting to achieve neat openings for boxes.

Do not install boxes back-to-back in walls; install boxes with minimum 24 inches separation.

Do not damage insulation.

Install service fittings in accordance with manufacturer's instructions.

Neatly train and secure wiring inside boxes, equipment, and panel boards.

Use wire-pulling lubricant for pulling 4 AWG and larger wires.

Support cables above accessible ceilings to keep them from resting on ceiling tiles.

Make splices, taps, and terminations to carry full ampacity of conductors without perceptible temperature rise.

Terminate spare conductors with electrical tape.

Install wiring devices in accordance with manufacturer's instructions.

Install wall switches 48 inches above floor, "OFF" position down.

Install wall dimmers 48 inches above floor. Derate ganged dimmers as instructed by manufacturer. Do not use common neutral.

Install convenience receptacles 18 inches above floor, 4 inches above counters, backsplash, grounding pole on bottom.

Install specific purpose receptacles at heights shown on drawings.

Install cord and attachment plug caps on equipment. Size cord for connected load and rating of branch circuit overcurrent protection.

Install wall plates flush and level.

Install decorative plates on switch, receptacle, and blank outlets in finished areas.

Install galvanized steel plates on outlet boxes and junction boxes in unfinished areas, above accessible ceilings, and on surface-mounted outlets.

END OF SECTION

THIS PAGE INTENTIONALLY BLANK

PART 1 GENERAL

SECTION INCLUDES

Grounding and bonding requirements.

Conductors for grounding and bonding.

Connectors for grounding and bonding.

Ground rod electrodes.

RELATED REQUIREMENTS

Section 26 05 53 - Identification for Electrical Systems: Identification products and requirements.

REFERENCE STANDARDS

IEEE 81 - Guide for Measuring Earth Resistivity, Ground Impedance, and Earth Surface Potentials of a Ground System.

NECA 1 - Standard for Good Workmanship in Electrical Construction; National Electrical Contractors Association.

NEMA GR 1 - Grounding Rod Electrodes and Grounding Rod Electrode Couplings; National Electrical Manufacturers Association.

NETA ATS - Acceptance Testing Specifications for Electrical Power Equipment and Systems; International Electrical Testing Association; 2013 (ANSI/NETA ATS).

NFPA 70 - National Electrical Code; National Fire Protection Association.

UL 467 - Grounding and Bonding Equipment.

ADMINISTRATIVE REQUIREMENTS

Coordination:

- Verify exact locations of underground metal water service pipe entrances to building.
- Coordinate the work with other trades to provide steel reinforcement complying with specified requirements for concrete-encased electrode.
- Notify Architect of any conflicts with or deviations from the contract documents. Obtain direction before proceeding with work.

Sequencing:

- Do not install ground rod electrodes until final backfill and compaction is complete.

SUBMITTALS

See Section 01 30 00 - Administrative Requirements for submittals procedures.

Field quality control test reports.

QUALITY ASSURANCE

Conform to requirements of NFPA 70.

Manufacturer Qualifications: Company specializing in manufacturing the products specified in this section with minimum three years documented experience.

Installer Qualifications for Signal Reference Grids: Company with minimum five years documented experience with high frequency grounding systems.

DELIVERY, STORAGE, AND HANDLING

Receive, inspect, handle, and store products in accordance with manufacturer's instructions.

PART 2 PRODUCTS

GROUNDING AND BONDING REQUIREMENTS

Do not use products for applications other than as permitted by NFPA 70 and product listing.

Unless specifically indicated to be excluded, provide all required components, conductors, connectors, conduit, boxes, fittings, supports, accessories, etc. as necessary for a complete grounding and bonding system.

Where conductor size is not indicated, size to comply with NFPA 70 but not less than applicable minimum size requirements specified.

Grounding System Resistance:

Achieve specified grounding system resistance under normally dry conditions unless otherwise approved by Architect. Precipitation within the previous 48 hours does not constitute normally dry conditions.

Grounding Electrode System: Not greater than 5 ohms to ground, when tested according to IEEE 81 using "fall-of-potential" method.

Between Grounding Electrode System and Major Electrical Equipment Frames, System Neutral, and Derived Neutral Points: Not greater than 0.5 ohms, when tested according to IEEE 81 using "point-to-point" methods.

Grounding Electrode System:

Provide connection to required and supplemental grounding electrodes indicated to form grounding electrode system.

Provide continuous grounding electrode conductors without splice or joint.

Install grounding electrode conductors in raceway where exposed to physical damage. Bond grounding electrode conductor to metallic raceways at each end with bonding jumper.

Metal Underground Water Pipe(s):

Provide connection to underground metal domestic and fire protection (where present) water service pipe(s) that are in direct contact with earth for at least 10 feet at an accessible location not more than 5 feet from the point of entrance to the building.

Provide bonding jumper(s) around insulating joints/pipes as required to make pipe electrically continuous.

Provide bonding jumper around water meter of sufficient length to permit removal of meter without disconnecting jumper.

Metal Building or Structure Frame:

Provide connection to metal building or structure frame effectively grounded in accordance with NFPA 70 at nearest accessible location.

Ground Rod Electrode(s):

Provide three electrodes in an equilateral triangle configuration unless otherwise indicated or required.

Space electrodes not less than 10 feet from each other and any other ground electrode.

Where location is not indicated, locate electrode(s) at least 5 feet outside building perimeter foundation as near as possible to electrical service entrance; where possible, locate in softscape (uncovered) area.

Provide additional ground electrode(s) as required to achieve specified grounding electrode system resistance.

Service-Supplied System Grounding:

For each service disconnect, provide grounding electrode conductor to connect neutral (grounded) service conductor to grounding electrode system. Unless otherwise indicated, make connection at neutral (grounded) bus in service disconnect enclosure.

For each service disconnect, provide main bonding jumper to connect neutral (grounded) bus to equipment ground bus where not factory-installed. Do not make any other connections between neutral (grounded) conductors and ground on load side of service disconnect.

Separately Derived System Grounding:

Separately derived systems include, but are not limited to:

Transformers (except autotransformers such as buck-boost transformers).

Provide grounding electrode conductor to connect derived system grounded conductor to nearest effectively grounded metal building frame. Unless otherwise indicated, make connection at neutral (grounded) bus in source enclosure.

Provide bonding jumper to connect derived system grounded conductor to nearest metal building frame and nearest metal water piping in the area served by the derived system, where not already used as a grounding electrode for the derived system. Make connection at same location as grounding electrode conductor connection.

Provide system bonding jumper to connect system grounded conductor to equipment ground bus. Make connection at same location as grounding electrode conductor connection. Do not make any other connections between neutral (grounded) conductors and ground on load side of separately derived system disconnect.

Where the source and first disconnecting means are in separate enclosures, provide supply-side bonding jumper between source and first disconnecting means.

Bonding and Equipment Grounding:

Provide bonding for equipment grounding conductors, equipment ground busses, metallic equipment enclosures, metallic raceways and boxes, device grounding terminals, and other normally non-current-carrying conductive materials enclosing electrical conductors/equipment or likely to become energized as indicated and in accordance with NFPA 70.

Provide insulated equipment grounding conductor in each feeder and branch circuit raceway. Do not use raceways as sole equipment grounding conductor.

Unless otherwise indicated, connect wiring device grounding terminal to branch circuit equipment grounding conductor and to outlet box with bonding jumper.

Terminate branch circuit equipment grounding conductors on solidly bonded equipment ground bus only. Do not terminate on neutral (grounded) or isolated/insulated ground bus.

Provide bonding jumper across expansion or expansion/deflection fittings provided to accommodate conduit movement.

Provide bonding for interior metal piping systems in accordance with NFPA 70. This includes, but is not limited to:

Metal water piping where not already effectively bonded to metal underground water pipe used as grounding electrode.

GROUNDING AND BONDING COMPONENTS

General Requirements:

Provide products listed, classified, and labeled by Underwriter's Laboratories Inc. (UL) or testing firm acceptable to authority having jurisdiction as suitable for the purpose indicated.

Provide products listed and labeled as complying with UL 467 where applicable.

Conductors for Grounding and Bonding, in addition to requirements of Section 26 05 19:

Use insulated copper conductors unless otherwise indicated.

Exceptions:

Use bare copper conductors where installed underground in direct contact with earth.

Use bare copper conductors where directly encased in concrete (not in raceway).

Connectors for Grounding and Bonding:

Description: Connectors appropriate for the application and suitable for the conductors and items to be connected; listed and labeled as complying with UL 467.

Unless otherwise indicated, use exothermic welded connections for underground, concealed and other inaccessible connections.

Unless otherwise indicated, use mechanical connectors, compression connectors, or exothermic welded connections for accessible connections.

Ground Rod Electrodes:

Comply with NEMA GR 1.

Material: Copper-bonded (copper-clad) steel.

Size: 3/4 inch diameter by 10 feet length, unless otherwise indicated.

PART 3 EXECUTION

EXAMINATION

Verify that work likely to damage grounding and bonding system components has been completed.

Verify that field measurements are as shown on the drawings.

Verify that conditions are satisfactory for installation prior to starting work.

INSTALLATION

Install products in accordance with manufacturer's instructions.

Install grounding and bonding system components in a neat and workmanlike manner in accordance with NECA 1.

Ground Rod Electrodes: Unless otherwise indicated, install ground rod electrodes vertically. Where encountered rock prohibits vertical installation, install at 45 degree angle or bury horizontally in trench at least 30 inches (750 mm) deep in accordance with NFPA 70 or provide ground plates.

Outdoor Installations: Unless otherwise indicated, install with top of rod 6 inches below finished grade.

Indoor Installations: Unless otherwise indicated, install with 4 inches of top of rod exposed.

Make grounding and bonding connections using specified connectors.

Remove appropriate amount of conductor insulation for making connections without cutting, nicking or damaging conductors. Do not remove conductor strands to facilitate insertion into connector.

Remove nonconductive paint, enamel, or similar coating at threads, contact points, and contact surfaces.

Exothermic Welds: Make connections using molds and weld material suitable for the items to be connected in accordance with manufacturer's recommendations.

Mechanical Connectors: Secure connections according to manufacturer's recommended torque settings.

Compression Connectors: Secure connections using manufacturer's recommended tools and dies.

Identify grounding and bonding system components in accordance with Section 26 05 53.

FIELD QUALITY CONTROL

Perform inspection, testing, and adjusting in accordance with Section 01 40 00.

Inspect and test in accordance with NETA ATS except Section 4.

Perform inspections and tests listed in NETA ATS, Section 7.13.

Perform ground electrode resistance tests under normally dry conditions. Precipitation within the previous 48 hours does not constitute normally dry conditions.

Investigate and correct deficiencies where measured ground resistances do not comply with specified requirements.

END OF SECTION

PART 1 GENERAL

SECTION INCLUDES

Galvanized steel rigid metal conduit (RMC).
Intermediate metal conduit (IMC).
PVC-coated galvanized steel rigid metal conduit (RMC).
Flexible metal conduit (FMC).
Liquidtight flexible metal conduit (LFMC).
Electrical metallic tubing (EMT).
Rigid polyvinyl chloride (PVC) conduit.
Conduit fittings.
Accessories.

RELATED REQUIREMENTS

Section 26 05 00 - Basic Electrical Materials and Methods.
Section 26 05 19 - Low-Voltage Electrical Power Conductors and Cables: Metal clad cable (Type MC), armored cable (Type AC), and manufactured wiring systems, including uses permitted.
Section 26 05 26 - Grounding and Bonding for Electrical Systems.
Includes additional requirements for fittings for grounding and bonding.
Section 26 05 29 - Hangers and Supports for Electrical Systems.
Section 26 05 37 - Boxes.
Section 26 05 53 - Identification for Electrical Systems: Identification products and requirements.

REFERENCE STANDARDS

ANSI C80.1 - American National Standard for Electrical Rigid Steel Conduit (ERSC).
ANSI C80.3 - American National Standard for Steel Electrical Metallic Tubing (EMT).
ANSI C80.6 - American National Standard for Electrical Intermediate Metal Conduit (EIMC).
NECA 1 - Standard for Good Workmanship in Electrical Construction; National Electrical Contractors Association.
NECA 101 - Standard for Installing Steel Conduits (Rigid, IMC, EMT); National Electrical Contractors Association.
NECA 111 - Standard for Installing Nonmetallic Raceways (RNC, ENT, LFNC); National Electrical Contractors Association.
NEMA FB 1 - Fittings, Cast Metal Boxes, and Conduit Bodies for Conduit, Electrical Metallic Tubing, and Cable; National Electrical Manufacturers Association; 2012 (ANSI/NEMA FB 1).
NEMA RN 1 - Polyvinyl-Chloride (PVC) Externally Coated Galvanized Rigid Steel Conduit and Intermediate Metal Conduit; National Electrical Manufacturers Association.
NEMA TC 2 - Electrical Polyvinyl Chloride (PVC) Conduit; National Electrical Manufacturers Association.
NEMA TC 3 - Polyvinyl Chloride (PVC) Fittings for Use with Rigid PVC Conduit and Tubing; National Electrical Manufacturers Association.
NFPA 70 - National Electrical Code; National Fire Protection Association.
UL 1 - Flexible Metal Conduit.
UL 6 - Electrical Rigid Metal Conduit-Steel.
UL 360 - Liquid-Tight Flexible Steel Conduit.
UL 514B - Conduit, Tubing, and Cable Fittings.
UL 651 - Schedule 40 and 80 Rigid PVC Conduit and Fittings.
UL 797 - Electrical Metallic Tubing-Steel.

UL 1242 - Electrical Intermediate Metal Conduit-Steel.

ADMINISTRATIVE REQUIREMENTS

Coordination:

Coordinate minimum sizes of conduits with the actual conductors to be installed, including adjustments for conductor sizes increased for voltage drop.

Coordinate the arrangement of conduits with structural members, ductwork, piping, equipment and other potential conflicts installed under other sections or by others.

Verify exact conduit termination locations required for boxes, enclosures, and equipment installed under other sections or by others.

Coordinate the work with other trades to provide roof penetrations that preserve the integrity of the roofing system and do not void the roof warranty.

Notify Architect of any conflicts with or deviations from the contract documents. Obtain direction before proceeding with work.

Sequencing:

Do not begin installation of conductors and cables until installation of conduit is complete between outlet, junction and splicing points.

SUBMITTALS

Product Data: Provide manufacturer's standard catalog pages and data sheets for conduits and fittings.

See Section 26 05 00 - Basic Electrical Materials and Methods for submittal procedures.

Maintain one copy of each document on site.

QUALITY ASSURANCE

Conform to requirements of NFPA 70.

Installer Qualifications: Company specializing in performing Work of this section with minimum three years documented experience.

DELIVERY, STORAGE, AND HANDLING

Receive, inspect, handle, and store conduit and fittings in accordance with manufacturer's instructions.

PROJECT CONDITIONS

Verify that field measurements are as shown on Drawings.

Verify routing and termination locations of conduit prior to rough-in.

Conduit routing is shown on Drawings in approximate locations unless dimensioned. Route as required to complete wiring system.

PART 2 PRODUCTS

CONDUIT APPLICATIONS

Do not use conduit and associated fittings for applications other than as permitted by NFPA 70 and product listing.

Unless otherwise indicated and where not otherwise restricted, use the conduit types indicated for the specified applications. Where more than one listed application applies, comply with the most restrictive requirements. Where conduit type for a particular application is not specified, use galvanized steel rigid metal conduit.

Underground:

Under Slab on Grade: Use galvanized steel rigid metal conduit, intermediate metal conduit (IMC), PVC-coated galvanized steel rigid metal conduit, or rigid PVC conduit.

Exterior, Direct-Buried: Use galvanized steel rigid metal conduit, intermediate metallic conduit (IMC), PVC-coated galvanized steel rigid metal conduit, or rigid PVC conduit.

Where rigid polyvinyl (PVC) conduit is provided, transition to galvanized steel rigid metal conduit where emerging from underground.

Where rigid polyvinyl (PVC) conduit larger than 2 inch (53 mm) trade size is provided, use galvanized steel rigid metal conduit elbows for bends.

Where steel conduit is installed in direct contact with earth where soil has a resistivity of less than 2000 ohm-centimeters or is characterized as severely corrosive based on soils report or local experience, use corrosion protection tape to provide supplementary corrosion protection or use PVC-coated galvanized steel rigid metal conduit.

Where steel conduit emerges from concrete into soil, use corrosion protection tape to provide supplementary corrosion protection for a minimum of 4 inches on either side of where conduit emerges or use PVC-coated galvanized steel rigid metal conduit.

Embedded Within Concrete:

Within Slab on Grade (within structural slabs only where approved by Structural Engineer): Use galvanized steel rigid metal conduit, intermediate metal conduit (IMC), PVC-coated galvanized steel rigid metal conduit, or rigid PVC conduit.

Within Slab Above Ground (within structural slabs only where approved by Structural Engineer): Use galvanized steel rigid metal conduit, intermediate metal conduit (IMC), PVC-coated galvanized steel rigid metal conduit, or rigid PVC conduit.

Within Concrete Walls Above Ground: Use galvanized steel rigid metal conduit, intermediate metal conduit (IMC), PVC-coated galvanized steel rigid metal conduit, or rigid PVC conduit.

Where rigid polyvinyl (PVC) conduit is provided, transition to galvanized steel rigid metal conduit where emerging from concrete.

Concealed Within Hollow Stud Walls: Use galvanized steel rigid metal conduit, intermediate metal conduit (IMC), or electrical metallic tubing (EMT).

Concealed Above Accessible Ceilings: Use galvanized steel rigid metal conduit, intermediate metal conduit (IMC), or electrical metallic tubing (EMT).

Interior, Damp or Wet Locations: Use galvanized steel rigid metal conduit or intermediate metal conduit (IMC).

Exposed, Interior, Not Subject to Physical Damage: Use galvanized steel rigid metal conduit, intermediate metal conduit (IMC), or electrical metallic tubing (EMT).

Exposed, Interior, Subject to Physical Damage: Use galvanized steel rigid metal conduit or intermediate metal conduit (IMC).

Exposed, Exterior: Use galvanized steel rigid metal conduit, intermediate metal conduit (IMC), or PVC-coated galvanized steel rigid metal conduit.

Concealed, Exterior, Not Embedded in Concrete or in Contact With Earth: Use galvanized steel rigid metal conduit or intermediate metal conduit (IMC).

Corrosive Locations Above Ground: Use PVC-coated galvanized steel rigid metal conduit or aluminum rigid metal conduit.

Connections to Vibrating Equipment:

Dry Locations: Use flexible metal conduit.

Damp, Wet, or Corrosive Locations: Use liquidtight flexible metal conduit.

Maximum Length: 6 feet unless otherwise indicated.

CONDUIT REQUIREMENTS

Fittings for Grounding and Bonding: Also comply with Section 26 05 26.

Provide all conduit, fittings, supports, and accessories required for a complete raceway system.

Provide products listed, classified, and labeled by Underwriter's Laboratories Inc. (UL) or testing firm acceptable to authority having jurisdiction as suitable for the purpose indicated.

Minimum Conduit Size, Unless Otherwise Indicated:

Branch Circuits: 3/4 inch (21 mm) trade size.

Branch Circuit Homeruns: 3/4 inch (21 mm) trade size.

Control Circuits: 1/2 inch (16 mm) trade size.

Flexible Connections to Luminaires: 1/2 inch (16 mm) trade size.

Underground, Interior: 3/4 inch (21 mm) trade size.

Underground, Exterior: 1 inch (27 mm) trade size.

Where conduit size is not indicated, size to comply with NFPA 70 but not less than applicable minimum size requirements specified.

GALVANIZED STEEL RIGID METAL CONDUIT (RMC)

Description: NFPA 70, Type RMC galvanized steel rigid metal conduit complying with ANSI C80.1 and listed and labeled as complying with UL 6.

Fittings:

Non-Hazardous Locations: Use fittings complying with NEMA FB 1 and listed and labeled as complying with UL 514B.

Material: Use steel or malleable iron.

Connectors and Couplings: Use threaded type fittings only. Threadless set screw and compression (gland) type fittings are not permitted.

INTERMEDIATE METAL CONDUIT (IMC)

Description: NFPA 70, Type IMC galvanized steel intermediate metal conduit complying with ANSI C80.6 and listed and labeled as complying with UL 1242.

Fittings:

Non-Hazardous Locations: Use fittings complying with NEMA FB 1 and listed and labeled as complying with UL 514B.

Material: Use steel or malleable iron.

Connectors and Couplings: Use threaded type fittings only. Threadless set screw and compression (gland) type fittings are not permitted.

Or equal performance.

PVC-COATED GALVANIZED STEEL RIGID METAL CONDUIT (RMC)

Description: NFPA 70, Type RMC galvanized steel rigid metal conduit with external polyvinyl chloride (PVC) coating complying with NEMA RN 1 and listed and labeled as complying with UL 6.

Exterior Coating: Polyvinyl chloride (PVC), nominal thickness of 40 mil.

PVC-Coated Fittings:

Manufacturer: Same as manufacturer of PVC-coated conduit to be installed.

Non-Hazardous Locations: Use fittings listed and labeled as complying with UL 514B.

Material: Use steel or malleable iron.

Exterior Coating: Polyvinyl chloride (PVC), minimum thickness of 40 mil.

PVC-Coated Supports: Furnish with exterior coating of polyvinyl chloride (PVC), minimum thickness of 15 mil.

FLEXIBLE METAL CONDUIT (FMC)

Description: NFPA 70, Type FMC standard wall steel flexible metal conduit listed and labeled as complying with UL 1, and listed for use in classified firestop systems to be used.

Fittings:

Description: Fittings complying with NEMA FB 1 and listed and labeled as complying with UL 514B.

Material: Use steel or malleable iron.

LIQUIDTIGHT FLEXIBLE METAL CONDUIT (LFMC)

Description: NFPA 70, Type LFMC polyvinyl chloride (PVC) jacketed steel flexible metal conduit listed and labeled as complying with UL 360.

Fittings:

Description: Fittings complying with NEMA FB 1 and listed and labeled as complying with UL 514B.
Material: Use steel or malleable iron.

ELECTRICAL METALLIC TUBING (EMT)

Description: NFPA 70, Type EMT steel electrical metallic tubing complying with ANSI C80.3 and listed and labeled as complying with UL 797.

Fittings:

Description: Fittings complying with NEMA FB 1 and listed and labeled as complying with UL 514B.

Material: Use steel or malleable iron.

Connectors and Couplings: Use compression (gland) or set-screw type.

Do not use indenter type connectors and couplings.

Or equal performance.

RIGID POLYVINYL CHLORIDE (PVC) CONDUIT

Description: NFPA 70, Type PVC rigid polyvinyl chloride conduit complying with NEMA TC 2 and listed and labeled as complying with UL 651; Schedule 40 unless otherwise indicated, Schedule 80 where subject to physical damage; rated for use with conductors rated 90 degrees C.

Fittings:

Manufacturer: Same as manufacturer of conduit to be connected.

Description: Fittings complying with NEMA TC 3 and listed and labeled as complying with UL 651; material to match conduit.

ACCESSORIES

Corrosion Protection Tape: PVC-based, minimum thickness of 20 mil.

Conduit Joint Compound: Corrosion-resistant, electrically conductive; suitable for use with the conduit to be installed.

Solvent Cement for PVC Conduit and Fittings: As recommended by manufacturer of conduit and fittings to be installed.

Pull Strings: Use nylon cord with average breaking strength of not less than 200 pound-force.

PART 3 EXECUTION

INSTALLATION

Install products in accordance with manufacturer's instructions.

Install conduit in a neat and workmanlike manner in accordance with NECA 1.

Install galvanized steel rigid metal conduit (RMC) in accordance with NECA 101.

Install intermediate metal conduit (IMC) in accordance with NECA 101.

Install PVC-coated galvanized steel rigid metal conduit (RMC) using only tools approved by the manufacturer.

Install rigid polyvinyl chloride (PVC) conduit in accordance with NECA 111.

Conduit Routing:

Unless dimensioned, conduit routing indicated is diagrammatic.

When conduit destination is indicated and routing is not shown, determine exact routing required.

Conceal all conduits unless specifically indicated to be exposed.

Conduits in the following areas may be exposed, unless otherwise indicated:

Electrical rooms.

Mechanical equipment rooms.

Unless otherwise approved, do not route conduits exposed:

Across floors.

Across top of parapet walls.

Across building exterior surfaces.

Conduits installed underground or embedded in concrete may be routed in the shortest possible manner unless otherwise indicated. Route all other conduits parallel or perpendicular to building structure and surfaces, following surface contours where practical.

Arrange conduit to maintain adequate headroom, clearances, and access.

Arrange conduit to provide no more than the equivalent of four 90 degree bends between pull points.

Route conduits above water and drain piping where possible.

Arrange conduit to prevent moisture traps. Provide drain fittings at low points and at sealing fittings where moisture may collect.

Maintain minimum clearance of 6 inches between conduits and piping for other systems.

Conduit Support:

Secure and support conduits in accordance with NFPA 70 and Section 26 05 29 using suitable supports and methods approved by the authority having jurisdiction.

Provide independent support from building structure. Do not provide support from piping, ductwork, or other systems.

Installation Above Suspended Ceilings: Do not provide support from ceiling support system. Do not provide support from ceiling grid or allow conduits to lay on ceiling tiles.

Connections and Terminations:

Use approved zinc-rich paint or conduit joint compound on field-cut threads of galvanized steel conduits prior to making connections.

Where two threaded conduits must be joined and neither can be rotated, use three-piece couplings or split couplings. Do not use running threads.

Use suitable adapters where required to transition from one type of conduit to another.

Provide drip loops for liquidtight flexible conduit connections to prevent drainage of liquid into connectors.

Terminate threaded conduits in boxes and enclosures using threaded hubs or double lock nuts for dry locations and raintight hubs for wet locations.

Provide insulating bushings or insulated throats at all conduit terminations to protect conductors.

Secure joints and connections to provide maximum mechanical strength and electrical continuity.

Penetrations:

Do not penetrate or otherwise notch or cut structural members, including footings and grade beams, without approval of Structural Engineer.

Make penetrations perpendicular to surfaces unless otherwise indicated.

Provide sleeves for penetrations as indicated or as required to facilitate installation. Set sleeves flush with exposed surfaces unless otherwise indicated or required.

Conceal bends for conduit risers emerging above ground.

Seal interior of conduits entering the building from underground at first accessible point to prevent entry of moisture and gases.

Where conduits penetrate waterproof membrane, seal as required to maintain integrity of membrane.

Make penetrations for roof-mounted equipment within associated equipment openings and curbs where possible to minimize roofing system penetrations. Where penetrations are necessary, seal as indicated or as required to preserve integrity of roofing system and maintain roof warranty. Include proposed locations of penetrations and methods for sealing with submittals.

Install firestopping to preserve fire resistance rating of partitions and other elements, using materials and methods specified in Section 07 84 00.

Conduit Movement Provisions: Where conduits are subject to movement, provide expansion and expansion/deflection fittings to prevent damage to enclosed conductors or connected equipment. This includes, but is not limited to:

Where conduits cross structural joints intended for expansion, contraction, or deflection.

Where conduits are subject to earth movement by settlement or frost.

Condensation Prevention: Where conduits cross barriers between areas of potential substantial temperature differential, provide sealing fitting or approved sealing compound at an accessible point near the penetration to prevent condensation. This includes, but is not limited to:

Where conduits pass from outdoors into conditioned interior spaces.

Where conduits pass from unconditioned interior spaces into conditioned interior spaces.

Provide grounding and bonding in accordance with Section 26 05 26.

PROTECTION

Immediately after installation of conduit, use suitable manufactured plugs to provide protection from entry of moisture and foreign material and do not remove until ready for installation of conductors.

END OF SECTION

THIS PAGE INTENTIONALLY BLANK

PART 1 GENERAL

SECTION INCLUDES

Outlet and device boxes up to 100 cubic inches, including those used as junction and pull boxes.

Cabinets and enclosures, including junction and pull boxes larger than 100 cubic inches.

Wall and ceiling outlet boxes.

Pull and junction boxes.

RELATED REQUIREMENTS

Section 26 05 00 - Basic Electrical Materials and Methods.

Section 07 84 00 - Firestopping.

Section 08 31 00 - Access Doors and Panels: Panels for maintaining access to concealed boxes.

Section 26 05 26 - Grounding and Bonding for Electrical Systems.

Section 26 05 29 - Hangers and Supports for Electrical Systems.

Section 26 05 34 - Conduit:

- Conduit bodies and other fittings.
- Additional requirements for locating boxes to limit conduit length and/or number of bends between pulling points.

Section 26 27 26 - Wiring Devices:

- Wall plates.
- Additional requirements for locating boxes for wiring devices.

Section 27 10 05 - Structured Cabling for Voice and Data - Inside-Plant: Additional requirements for communications systems outlet boxes.

Section 26 27 16 - Electrical Cabinets and Enclosures.

Section 26 27 26 - Wiring Devices: Wall plates in finished areas.

REFERENCE STANDARDS

NECA 1 - Standard for Good Workmanship in Electrical Construction; National Electrical Contractors Association.

NECA 130 - Standard for Installing and Maintaining Wiring Devices; National Electrical Contractors Association.

NEMA FB 1 - Fittings, Cast Metal Boxes, and Conduit Bodies for Conduit, Electrical Metallic Tubing, and Cable; National Electrical Manufacturers Association; 2012 (ANSI/NEMA FB 1).

NEMA OS 1 - Sheet-Steel Outlet Boxes, Device Boxes, Covers, and Box Supports; National Electrical Manufacturers Association; 2008 (Revised 2010) (ANSI/NEMA OS 1).

NEMA OS 2 - Nonmetallic Outlet Boxes, Device Boxes, Covers and Box Supports; National Electrical Manufacturers Association; 2008 (Revised 2010) (ANSI/NEMA OS 2).

NEMA 250 - Enclosures for Electrical Equipment (1000 Volts Maximum); National Electrical Manufacturers Association.

NFPA 70 - National Electrical Code; National Fire Protection Association.

UL 50 - Enclosures for Electrical Equipment, Non-Environmental Considerations.

UL 50E - Enclosures for Electrical Equipment, Environmental Considerations.

UL 508A - Industrial Control Panels.

UL 514A - Metallic Outlet Boxes.

UL 514C - Nonmetallic Outlet Boxes, Flush-Device Boxes, and Covers.

ADMINISTRATIVE REQUIREMENTS

Coordination:

Coordinate the work with other trades to avoid placement of ductwork, piping, equipment, or other potential obstructions within the dedicated equipment spaces and working clearances for electrical equipment required by NFPA 70.

Coordinate arrangement of electrical equipment with the dimensions and clearance requirements of the actual equipment to be installed.

Coordinate minimum sizes of boxes with the actual installed arrangement of conductors, clamps, support fittings, and devices, calculated according to NFPA 70.

Coordinate minimum sizes of pull boxes with the actual installed arrangement of connected conduits, calculated according to NFPA 70.

Coordinate the placement of boxes with millwork, furniture, devices, equipment, etc. installed under other sections or by others.

Coordinate the work with other trades to preserve insulation integrity.

Coordinate the work with other trades to provide walls suitable for installation of flush-mounted boxes where indicated.

Notify Architect of any conflicts with or deviations from the contract documents. Obtain direction before proceeding with work.

SUBMITTALS

Maintenance Materials: Furnish the following for Owner's use in maintenance of project.

See Section 01 60 00 - Product Requirements, for additional provisions.

Keys for Lockable Enclosures: Two of each different key.

See Section 26 05 00 - Basic Electrical Materials and Methods, for submittal procedures.

Maintain one copy of each document on site.

QUALITY ASSURANCE

Conform to requirements of NFPA 70.

DELIVERY, STORAGE, AND HANDLING

Receive, inspect, handle, and store products in accordance with manufacturer's instructions.

Installer Qualifications: Company specializing in performing Work of this section with minimum three years documented experience.

PART 2 PRODUCTS

BOXES

General Requirements:

Do not use boxes and associated accessories for applications other than as permitted by NFPA 70 and product listing.

Provide all boxes, fittings, supports, and accessories required for a complete raceway system and to accommodate devices and equipment to be installed.

Provide products listed, classified, and labeled by Underwriter's Laboratories Inc. (UL) or testing firm acceptable to authority having jurisdiction as suitable for the purpose indicated.

Where box size is not indicated, size to comply with NFPA 70 but not less than applicable minimum size requirements specified.

Provide grounding terminals within boxes where equipment grounding conductors terminate.

Outlet and Device Boxes Up to 100 cubic inches, Including Those Used as Junction and Pull Boxes:

Use sheet-steel boxes for dry locations unless otherwise indicated or required.

Use cast iron boxes or cast aluminum boxes for damp or wet locations unless otherwise indicated or required; furnish with compatible weatherproof gasketed covers.

Use suitable concrete type boxes where flush-mounted in concrete.

Use suitable masonry type boxes where flush-mounted in masonry walls.

Use raised covers suitable for the type of wall construction and device configuration where required.

Use shallow boxes where required by the type of wall construction.

Do not use "through-wall" boxes designed for access from both sides of wall.

Sheet-Steel Boxes: Comply with NEMA OS 1, and list and label as complying with UL 514A.

Cast Metal Boxes: Comply with NEMA FB 1, and list and label as complying with UL 514A; furnish with threaded hubs.

Boxes for Supporting Luminaires and Ceiling Fans: Listed as suitable for the type and weight of load to be supported; furnished with fixture stud to accommodate mounting of luminaire where required.

Boxes for Ganged Devices: Use multigang boxes of single-piece construction. Do not use field-connected gangable boxes.

Wall Plates: Comply with Section 26 27 26.

Cabinets and Enclosures, Including Junction and Pull Boxes Larger Than 100 cubic inches:

Comply with NEMA 250, and list and label as complying with UL 50 and UL 50E, or UL 508A.

NEMA 250 Environment Type, Unless Otherwise Indicated:

Junction and Pull Boxes Larger Than 100 cubic inches:

Provide screw-cover or hinged-cover enclosures unless otherwise indicated.

Cabinets and Hinged-Cover Enclosures, Other Than Junction and Pull Boxes:

Provide lockable hinged covers, all locks keyed alike unless otherwise indicated.

Finish for Painted Steel Enclosures: Manufacturer's standard grey unless otherwise indicated.

OUTLET BOXES

Sheet Metal Outlet Boxes: NEMA OS 1, galvanized steel.

Luminaire and Equipment Supporting Boxes: Rated for weight of equipment supported; include 1/2 inch male fixture studs where required.

Nonmetallic Outlet Boxes: NEMA OS 2.

Cast Boxes: NEMA FB 1, Type FD, aluminum. Provide gasketed cover by box manufacturer. Provide threaded hubs.

Wall Plates for Finished Areas: As specified in Section 26 27 26.

PULL AND JUNCTION BOXES

Sheet Metal Boxes: NEMA OS 1, galvanized steel.

Hinged Enclosures: As specified in Section 26 27 16.

Surface Mounted Cast Metal Box: NEMA 250, Type 4; flat-flanged, surface mounted junction box:

Material: Galvanized cast iron.

Cover: Furnish with ground flange, neoprene gasket, and stainless steel cover screws.

PART 3 EXECUTION

EXAMINATION

Verify that field measurements are as shown on drawings.

Verify that mounting surfaces are ready to receive boxes.

Verify that conditions are satisfactory for installation prior to starting work.

INSTALLATION

Install products in accordance with manufacturer's instructions.

Perform work in a neat and workmanlike manner in accordance with NECA 1 and, where applicable, NECA 130, including mounting heights specified in those standards where mounting heights are not indicated.

Arrange equipment to provide minimum clearances in accordance with manufacturer's instructions and NFPA 70.

Box Locations:

Locate boxes to be accessible. Provide access panels in accordance with Section 08 31 00 as required where approved by the Architect.

Unless dimensioned, box locations indicated are approximate.

Locate boxes as required for devices installed under other sections or by others.

Switches, Receptacles, and Other Wiring Devices: Comply with Section 26 27 26.

Communications Systems Outlets: Comply with Section 27 10 05.

Locate boxes so that wall plates do not span different building finishes.

Locate boxes so that wall plates do not cross masonry joints.

Unless otherwise indicated, where multiple outlet boxes are installed at the same location at different mounting heights, install along a common vertical center line.

Locate junction and pull boxes as indicated, as required to facilitate installation of conductors, and to limit conduit length and/or number of bends between pulling points in accordance with Section 26 05 34.

Box Supports:

Secure and support boxes in accordance with NFPA 70 and Section 26 05 29 using suitable supports and methods approved by the authority having jurisdiction.

Provide independent support from building structure except for cast metal boxes (other than boxes used for fixture support) supported by threaded conduit connections in accordance with NFPA 70. Do not provide support from piping, ductwork, or other systems.

Install boxes plumb and level.

Install boxes as required to preserve insulation integrity.

Install permanent barrier between ganged wiring devices when voltage between adjacent devices exceeds 300 V.

Install firestopping to preserve fire resistance rating of partitions and other elements, using materials and methods specified in Section 07 84 00.

Close unused box openings.

Install blank wall plates on junction boxes and on outlet boxes with no devices or equipment installed or designated for future use.

Provide grounding and bonding in accordance with Section 26 05 26.

Install boxes securely, in a neat and workmanlike manner, as specified in NECA 1.

Install in locations as shown on Drawings, and as required for splices, taps, wire pulling, equipment connections, and as required by NFPA 70.

Orient boxes to accommodate wiring devices oriented as specified in Section 26 27 26.

Support boxes independently of conduit, except cast box that is connected to two rigid metal conduits both supported within 12 inches of box.

ADJUSTING

Adjust flush-mounting outlets to make front flush with finished wall material.

Install knockout closures in unused box openings.

CLEANING

Clean interior of boxes to remove dirt, debris, plaster and other foreign material.

PROTECTION

Immediately after installation, protect boxes from entry of moisture and foreign material until ready for installation of conductors.

Clean exposed surfaces and restore finish.

END OF SECTION

THIS PAGE INTENTIONALLY BLANK

PART 1 GENERAL

SECTION INCLUDES

Electrical identification requirements.
Identification nameplates and labels.
Wire and cable markers.
Voltage markers.
Underground warning tape.
Warning signs and labels.

RELATED REQUIREMENTS

Section 26 05 00 - Basic Electrical Materials and Methods.
Section 26 05 19 - Low-Voltage Electrical Power Conductors and Cables: Color coding for power conductors and cables 600 V and less; vinyl color coding electrical tape.
Section 26 27 26 - Wiring Devices: Device and wallplate finishes; factory pre-marked wallplates.
Section 27 10 05 - Structured Cabling for Voice and Data: Identification for communications cabling and devices.

REFERENCE STANDARDS

ANSI Z535.2 - American National Standard for Environmental and Facility Safety Signs.
ANSI Z535.4 - American National Standard for Product Safety Signs and Labels.
NFPA 70 - National Electrical Code; National Fire Protection Association.
NFPA 70E - Standard for Electrical Safety in the Workplace.
UL 969 - Marking and Labeling Systems.

ADMINISTRATIVE REQUIREMENTS

Coordination:
- Verify final designations for equipment, systems, and components to be identified prior to fabrication of identification products.

Sequencing:
- Do not conceal items to be identified, in locations such as above suspended ceilings, until identification products have been installed.
- Do not install identification products until final surface finishes and painting are complete.

SUBMITTALS

Product Data: Provide manufacturer's standard catalog pages and data sheets for each product.
See Section 26 05 00 - Basic Electrical Materials and Methods for submittals procedures.

QUALITY ASSURANCE

Conform to requirements of NFPA 70.

FIELD CONDITIONS

Do not install adhesive products when ambient temperature is lower than recommended by manufacturer.

PART 2 PRODUCTS

IDENTIFICATION REQUIREMENTS

Identification for Equipment:

Use identification nameplate to identify each piece of electrical distribution and control equipment and associated sections, compartments, and components.

Panelboards:

Identify ampere rating.

Identify voltage and phase.

Identify power source and circuit number. Include location when not within sight of equipment.

Use typewritten circuit directory to identify load(s) served for panelboards with a door. Identify spares and spaces using pencil.

For power panelboards without a door, use identification nameplate to identify load(s) served for each branch device. Do not identify spares and spaces.

Service Equipment:

Use identification nameplate to identify each service disconnecting means.

Use identification nameplate at each piece of service equipment to identify the available fault current and the date calculations were performed.

Use voltage marker to identify highest voltage present for each piece of electrical equipment.

Use identification nameplate to identify equipment utilizing series ratings, where permitted, in accordance with NFPA 70.

Use identification nameplate to identify disconnect location for equipment with remote disconnecting means.

Use identification label or handwritten text using indelible marker on inside of door at each fused switch to identify required NEMA fuse class and size.

Use identification label to identify overcurrent protective devices for branch circuits serving fire alarm circuits. Identify with text "FIRE ALARM CIRCUIT".

Identification for Conductors and Cables:

Color Coding for Power Conductors 600 V and Less: Comply with Section 26 05 19.

Identification for Communications Conductors and Cables: Comply with Section 27 10 05.

Use identification nameplate or identification label to identify color code for ungrounded and grounded power conductors inside door or enclosure at each piece of feeder or branch-circuit distribution equipment when premises has feeders or branch circuits served by more than one nominal voltage system.

Use wire and cable markers to identify circuit number or other designation indicated for power, control, and instrumentation conductors and cables at the following locations:

At each source and load connection.

Within boxes when more than one circuit is present.

Use wire and cable markers to identify connected grounding electrode system components for grounding electrode conductors.

Use underground warning tape to identify direct buried cables.

Identification for Boxes:

Use voltage markers to identify highest voltage present.

Use identification labels or handwritten text using indelible marker to identify circuits enclosed.

Use warning labels to identify electrical hazards for boxes containing exposed live parts or exposed conductors operating at over 600 V nominal with the word message "DANGER; HIGH VOLTAGE; KEEP OUT".

Identification for Devices:

Identification for Communications Devices: Comply with Section 27 10 05.

Wiring Device and Wallplate Finishes: Comply with Section 26 27 26.

Use identification label to identify receptacles protected by upstream GFI protection, where permitted.

IDENTIFICATION NAMEPLATES AND LABELS

Identification Nameplates:

Materials:

Indoor Clean, Dry Locations: Use plastic nameplates.

Outdoor Locations: Use plastic, stainless steel, or aluminum nameplates suitable for exterior use.

Plastic Nameplates: Two-layer or three-layer laminated acrylic or electrically non-conductive phenolic with beveled edges; minimum thickness of 1/16 inch; engraved text.

Mounting Holes for Mechanical Fasteners: Two, centered on sides for sizes up to 1 inch high; Four, located at corners for larger sizes.

Identification Labels:

Materials: Use self-adhesive laminated plastic labels; UV, chemical, water, heat, and abrasion resistant.

Text: Use factory pre-printed or machine-printed text. Do not use handwritten text unless otherwise indicated.

Format for Equipment Identification:

Minimum Size: 1 inch by 2.5 inches.

Legend:

System designation where applicable:

Emergency Power System: Identify with text "EMERGENCY".

Equipment designation or other approved description.

Text: All capitalized unless otherwise indicated.

Minimum Text Height:

System Designation: 1 inch.

Equipment Designation: 1/2 inch.

Color:

Normal Power System: White text on black background.

Emergency Power System: White text on red background.

Fire Alarm System: White text on red background.

Format for General Information and Operating Instructions:

Minimum Size: 1 inch by 2.5 inches.

Legend: Include information or instructions indicated or as required for proper and safe operation and maintenance.

Text: All capitalized unless otherwise indicated.

Minimum Text Height: 1/4 inch.

Color: Black text on white background unless otherwise indicated.

WIRE AND CABLE MARKERS

Markers for Conductors and Cables: Use wrap-around self-adhesive vinyl cloth, wrap-around self-adhesive vinyl self-laminating, heat-shrink sleeve, plastic sleeve, plastic clip-on, or vinyl split sleeve type markers suitable for the conductor or cable to be identified.

Markers for Conductor and Cable Bundles: Use plastic marker tags secured by nylon cable ties.

Legend: Power source and circuit number or other designation indicated.

Text: Use factory pre-printed or machine-printed text, all capitalized unless otherwise indicated.

Minimum Text Height: 1/8 inch.

Color: Black text on white background unless otherwise indicated.

VOLTAGE MARKERS

Markers for Conduits: Use factory pre-printed self-adhesive vinyl, self-adhesive vinyl cloth, or vinyl snap-around type markers.

Markers for Boxes and Equipment Enclosures: Use factory pre-printed self-adhesive vinyl or self-adhesive vinyl cloth type markers.

Minimum Size:

Markers for Equipment: 1 1/8 by 4 1/2 inches.

Markers for Pull Boxes: 1 1/8 by 4 1/2 inches.

Markers for Junction Boxes: 1/2 by 2 1/4 inches.

Legend:

Markers for Voltage Identification: Highest voltage present.

Color: Black text on orange background unless otherwise indicated.

UNDERGROUND WARNING TAPE

Materials: Use non-detectable type polyethylene tape suitable for direct burial, unless otherwise indicated.

Exception: Use foil-backed detectable type tape where required by serving utility or where directed by Owner.

Non-detectable Type Tape: 6 inches wide, with minimum thickness of 4 mil.

Foil-backed Detectable Type Tape: 3 inches wide, with minimum thickness of 5 mil, unless otherwise required for proper detection.

Legend: Type of service, continuously repeated over full length of tape.

Color:

Tape for Buried Power Lines: Black text on red background.

Tape for Buried Communication, Alarm, and Signal Lines: Black text on orange background.

WARNING SIGNS AND LABELS

Comply with ANSI Z535.2 or ANSI Z535.4 as applicable.

Warning Signs:

Materials:

Indoor Dry, Clean Locations: Use factory pre-printed rigid plastic or self-adhesive vinyl signs.

Outdoor Locations: Use factory pre-printed rigid aluminum signs.

Rigid Signs: Provide four mounting holes at corners for mechanical fasteners.

Minimum Size: 7 by 10 inches unless otherwise indicated.

Warning Labels:

Materials: Use factory pre-printed or machine-printed self-adhesive polyester or self-adhesive vinyl labels; UV, chemical, water, heat, and abrasion resistant; produced using materials recognized to UL 969.

Machine-Printed Labels: Use thermal transfer process printing machines and accessories recommended by label manufacturer.

Minimum Size: 2 by 4 inches unless otherwise indicated.

PART 3 EXECUTION

PREPARATION

Clean surfaces to receive adhesive products according to manufacturer's instructions.

INSTALLATION

Install products in accordance with manufacturer's instructions.

Install identification products to be plainly visible for examination, adjustment, servicing, and maintenance. Unless otherwise indicated, locate products as follows:

Surface-Mounted Equipment: Enclosure front.

Flush-Mounted Equipment: Inside of equipment door.

Free-Standing Equipment: Enclosure front; also enclosure rear for equipment with rear access.

Elevated Equipment: Legible from the floor or working platform.

Branch Devices: Adjacent to device.

Interior Components: Legible from the point of access.

Boxes: Outside face of cover.

Conductors and Cables: Legible from the point of access.

Devices: Outside face of cover.

Install identification products centered, level, and parallel with lines of item being identified.

Secure nameplates to exterior surfaces of enclosures using stainless steel screws and to interior surfaces using self-adhesive backing or epoxy cement.

Install self-adhesive labels and markers to achieve maximum adhesion, with no bubbles or wrinkles and edges properly sealed.

Install underground warning tape above buried lines with one tape per trench at 3 inches below finished grade.

Secure rigid signs using stainless steel screws.

Mark all handwritten text, where permitted, to be neat and legible.

FIELD QUALITY CONTROL

See Section 01 40 00 - Quality Requirements, for additional requirements.

Replace self-adhesive labels and markers that exhibit bubbles, wrinkles, curling or other signs of improper adhesion.

END OF SECTION

THIS PAGE INTENTIONALLY BLANK

PART 1 GENERAL

SECTION INCLUDES

Power distribution panelboards.

Lighting and appliance panelboards.

Overcurrent protective devices for panelboards.

RELATED REQUIREMENTS

Section 26 05 26 - Grounding and Bonding for Electrical Systems.

Section 26 05 29 - Hangers and Supports for Electrical Systems.

Section 26 05 53 - Identification for Electrical Systems: Identification products and requirements.

REFERENCE STANDARDS

FS W-C-375 - Circuit Breakers, Molded Case; Branch Circuit and Service; Federal Specification.

NECA 1 - Standard for Good Workmanship in Electrical Construction; National Electrical Contractors Association.

NECA 407 - Standard for Installing and Maintaining Panelboards; National Electrical Contractors Association.

NEMA 250 - Enclosures for Electrical Equipment (1000 Volts Maximum).

NEMA PB 1 - Panelboards; National Electrical Manufacturers Association.

NEMA PB 1.1 - General Instructions for Proper Installation, Operation and Maintenance of Panelboards Rated 600 Volts or Less; National Electrical Manufacturers Association.

NETA ATS - Acceptance Testing Specifications for Electrical Power Equipment and Systems; International Electrical Testing Association; 2013 (ANSI/NETA ATS).

NFPA 70 - National Electrical Code; National Fire Protection Association.

UL 50 - Enclosures for Electrical Equipment, Non-Environmental Considerations.

UL 50E - Enclosures for Electrical Equipment, Environmental Considerations.

UL 67 - Panelboards.

UL 489 - Molded-Case Circuit Breakers, Molded-Case Switches and Circuit Breaker Enclosures.

UL 943 - Ground-Fault Circuit-Interrupters.

UL 1053 - Ground-Fault Sensing and Relaying Equipment.

ADMINISTRATIVE REQUIREMENTS

Coordination:

Coordinate the work with other trades to avoid placement of ductwork, piping, equipment, or other potential obstructions within the dedicated equipment spaces and working clearances for electrical equipment required by NFPA 70.

Coordinate arrangement of electrical equipment with the dimensions and clearance requirements of the actual equipment to be installed.

Coordinate the work with other trades to provide walls suitable for installation of flush-mounted panelboards where indicated.

Verify with manufacturer that conductor terminations are suitable for use with the conductors to be installed.

Notify Architect of any conflicts with or deviations from the contract documents. Obtain direction before proceeding with work.

SUBMITTALS

Product Data: Provide manufacturer's standard catalog pages and data sheets for panelboards, enclosures, overcurrent protective devices, and other installed components and accessories.

Project Record Documents: Record actual installed locations of panelboards and actual installed circuiting arrangements.

QUALITY ASSURANCE

Conform to requirements of NFPA 70.

DELIVERY, STORAGE, AND HANDLING

Receive, inspect, handle, and store panelboards in accordance with manufacturer's instructions and NECA 407.

Store in a clean, dry space. Maintain factory wrapping or provide an additional heavy canvas or heavy plastic cover to protect units from dirt, water, construction debris, and traffic.

Handle carefully in accordance with manufacturer's written instructions to avoid damage to panelboard internal components, enclosure, and finish.

FIELD CONDITIONS

Maintain ambient temperature within the following limits during and after installation of panelboards:

Panelboards Containing Circuit Breakers: Between 23 degrees F and 104 degrees F.

PART 2 PRODUCTS

MANUFACTURERS

Siemens Industry, Inc: www.usa.siemens.com.

Eaton Corporation; Cutler-Hammer Products: www.eaton.com.

General Electric Company: www.geindustrial.com.

Schneider Electric; Square D Products: www.schneider-electric.us.

ALL PANELBOARDS

Provide products listed and labeled by Underwriters Laboratories Inc. as suitable for the purpose indicated.

Unless otherwise indicated, provide products suitable for continuous operation under the following service conditions:

Altitude: Less than 6,600 feet.

Ambient Temperature:

Panelboards Containing Circuit Breakers: Between 23 degrees F and 104 degrees F.

Short Circuit Current Rating:

Provide panelboards with listed short circuit current rating not less than the available fault current at the installed location as indicated on the drawings.

Mains: Configure for top or bottom incoming feed as indicated or as required for the installation.

Branch Overcurrent Protective Devices: Replaceable without disturbing adjacent devices.

Bussing: Sized in accordance with UL 67 temperature rise requirements.

Provide solidly bonded equipment ground bus in each panelboard, with a suitable lug for each feeder and branch circuit equipment grounding conductor.

Conductor Terminations: Suitable for use with the conductors to be installed.

Enclosures: Comply with NEMA 250, and list and label as complying with UL 50 and UL 50E.

Environment Type per NEMA 250: Unless otherwise indicated, as specified for the following installation locations:

Boxes: Galvanized steel unless otherwise indicated.

Provide wiring gutters sized to accommodate the conductors to be installed.

Provide painted steel boxes for surface-mounted panelboards where indicated, finish to match fronts.

Fronts:

Fronts for Surface-Mounted Enclosures: Same dimensions as boxes.

Fronts for Flush-Mounted Enclosures: Overlap boxes on all sides to conceal rough opening.

Lockable Doors: All locks keyed alike unless otherwise indicated.

Future Provisions: Prepare all unused spaces for future installation of devices including bussing, connectors, mounting hardware and all other required provisions.

Ground Fault Protection: Where ground-fault protection is indicated, provide system listed and labeled as complying with UL 1053.

POWER DISTRIBUTION PANELBOARDS

Description: Panelboards complying with NEMA PB 1, power and feeder distribution type, circuit breaker type, and listed and labeled as complying with UL 67; ratings, configurations and features as indicated on the drawings.

Conductor Terminations:

Main and Neutral Lug Material: Aluminum, suitable for terminating aluminum or copper conductors.

Main and Neutral Lug Type: Mechanical.

Bussing:

Phase and Neutral Bus Material: Aluminum.

Ground Bus Material: Aluminum.

Circuit Breakers:

Provide bolt-on type or plug-in type secured with locking mechanical restraints.

Enclosures:

Provide surface-mounted enclosures unless otherwise indicated.

LIGHTING AND APPLIANCE PANELBOARDS

Description: Panelboards complying with NEMA PB 1, lighting and appliance branch circuit type, circuit breaker type, and listed and labeled as complying with UL 67; ratings, configurations and features as indicated on the drawings.

Conductor Terminations:

Main and Neutral Lug Material: Aluminum, suitable for terminating aluminum or copper conductors.

Main and Neutral Lug Type: Mechanical.

Bussing:

Phase Bus Connections: Arranged for sequential phasing of overcurrent protective devices.

Phase and Neutral Bus Material: Aluminum.

Ground Bus Material: Aluminum.

Circuit Breakers: Thermal magnetic bolt-on type unless otherwise indicated.

Enclosures:

Provide surface-mounted or flush-mounted enclosures as indicated.

Provide clear plastic circuit directory holder mounted on inside of door.

OVERCURRENT PROTECTIVE DEVICES

Molded Case Circuit Breakers:

Description: Quick-make, quick-break, over center toggle, trip-free, trip-indicating circuit breakers listed and labeled as complying with UL 489, and complying with FS W-C-375 where applicable; ratings, configurations, and features as indicated on the drawings.

Interrupting Capacity:

Provide circuit breakers with interrupting capacity as required to provide the short circuit current rating indicated, but not less than:

Fully Rated Systems: Provide circuit breakers with interrupting capacity not less than the short circuit current rating indicated.

Conductor Terminations:

Lug Material: Aluminum, suitable for terminating aluminum or copper conductors.

Thermal Magnetic Circuit Breakers: For each pole, furnish thermal inverse time tripping element for overload protection and magnetic instantaneous tripping element for short circuit protection.

Multi-Pole Circuit Breakers: Furnish with common trip for all poles.

Provide the following circuit breaker types where indicated:

Ground Fault Circuit Interrupter (GFCI) Circuit Breakers: Listed as complying with UL 943, class A for protection of personnel.

Ground Fault Equipment Protection Circuit Breakers: Designed to trip at 30 mA for protection of equipment.

Do not use tandem circuit breakers.

Do not use handle ties in lieu of multi-pole circuit breakers.

Provide multi-pole circuit breakers for multi-wire branch circuits as required by NFPA 70.

SOURCE QUALITY CONTROL

Factory test panelboards according to NEMA PB 1.

PART 3 EXECUTION

EXAMINATION

Verify that field measurements are as shown on the drawings.

Verify that the ratings and configurations of the panelboards and associated components are consistent with the indicated requirements.

Verify that mounting surfaces are ready to receive panelboards.

Verify that conditions are satisfactory for installation prior to starting work.

INSTALLATION

Install products in accordance with manufacturer's instructions.

Install panelboards securely, in a neat and workmanlike manner in accordance with NECA 1 (general workmanship), NECA 407 (panelboards), and NEMA PB 1.1.

Arrange equipment to provide minimum clearances in accordance with manufacturer's instructions and NFPA 70.

Provide required supports in accordance with Section 26 05 29.

Install panelboards plumb.

Install flush-mounted panelboards so that trims fit completely flush to wall with no gaps and rough opening completely covered.

Mount panelboards such that the highest position of any operating handle for circuit breakers or switches does not exceed 79 inches above the floor or working platform.

Provide minimum of six spare 1 inch trade size conduits out of each flush-mounted panelboard stubbed into accessible space above ceiling and below floor.

Provide grounding and bonding in accordance with Section 26 05 26.

Terminate branch circuit equipment grounding conductors on solidly bonded equipment ground bus only. Do not terminate on isolated/insulated ground bus.

Terminate branch circuit isolated grounding conductors on isolated/insulated ground bus only. Do not terminate on solidly bonded equipment ground bus.

Install all field-installed branch devices, components, and accessories.

Set field-adjustable ground fault protection pickup and time delay settings as indicated.

Provide filler plates to cover unused spaces in panelboards.

FIELD QUALITY CONTROL

Inspect and test in accordance with NETA ATS, except Section 4.

Molded Case Circuit Breakers: Perform inspections and tests listed in NETA ATS, Section 7.6.1.1 for all main circuit breakers and circuit breakers larger than _____ amperes. Tests listed as optional are not required.

Ground Fault Protection Systems: Test in accordance with manufacturer's instructions as required by NFPA 70.

Test GFCI circuit breakers to verify proper operation.

Correct deficiencies and replace damaged or defective panelboards or associated components.

ADJUSTING

Adjust tightness of mechanical and electrical connections to manufacturer's recommended torque settings.

Adjust alignment of panelboard fronts.

CLEANING

Clean dirt and debris from panelboard enclosures and components according to manufacturer's instructions.

Repair scratched or marred exterior surfaces to match original factory finish.

END OF SECTION

THIS PAGE INTENTIONALLY BLANK

PART 1 GENERAL

SECTION INCLUDES

Wall switches.

Receptacles.

Wall plates.

RELATED REQUIREMENTS

Section 26 05 26 - Grounding and Bonding for Electrical Systems.

Section 26 05 00 - Basic Electrical Materials and Methods.

Section 26 05 37 - Boxes.

Section 26 05 53 - Identification for Electrical Systems: Identification products and requirements.

Section 26 27 17 - Equipment Wiring: Cords and plugs for equipment.

REFERENCE STANDARDS

FS W-C-596 - Connector, Electrical, Power, General Specification for; Federal Specification.

FS W-S-896 - Switches, Toggle (Toggle and Lock), Flush-mounted (General Specification); Federal Specification.

NECA 1 - Standard for Good Workmanship in Electrical Construction; National Electrical Contractors Association.

NEMA WD 1 - General Color Requirements for Wiring Devices; National Electrical Manufacturers Association.

NEMA WD 6 - Wiring Device -- Dimensional Specifications; National Electrical Manufacturers Association.

NFPA 70 - National Electrical Code; National Fire Protection Association.

UL 20 - General-Use Snap Switches.

UL 498 - Attachment Plugs and Receptacles.

UL 514D - Cover Plates for Flush-Mounted Wiring Devices.

UL 943 - Ground-Fault Circuit-Interrupters.

ADMINISTRATIVE REQUIREMENTS

Coordination:

- Coordinate the placement of outlet boxes with millwork, furniture, equipment, etc. installed under other sections or by others.
- Coordinate wiring device ratings and configurations with the electrical requirements of actual equipment to be installed.
- Coordinate the placement of outlet boxes for wall switches with actual installed door swings.
- Coordinate the installation and preparation of uneven surfaces, such as split face block, to provide suitable surface for installation of wiring devices.
- Notify Architect of any conflicts or deviations from the contract documents to obtain direction prior to proceeding with work.

Sequencing:

- Do not install wiring devices until final surface finishes and painting are complete.

SUBMITTALS

See Section 26 05 00 - Basic Electrical Materials and Methods, for submittal procedures.

Product Data: Provide manufacturer's catalog information showing dimensions, colors, and configurations.

Maintain one copy of each document on site.

QUALITY ASSURANCE

Conform to requirements of NFPA 70.

Installer Qualifications: Company specializing in performing Work of this section with minimum three years documented experience.

DELIVERY, STORAGE, AND PROTECTION

Store in a clean, dry space in original manufacturer's packaging until ready for installation.

PART 2 PRODUCTS

MANUFACTURERS

Hubbell Incorporated: www.hubbell-wiring.com.

Leviton Manufacturing Company, Inc: www.leviton.com.

Lutron Electronics Company, Inc: www.lutron.com.

Pass & Seymour, a brand of Legrand North America, Inc: www.legrand.us

Or equal performance.

APPLICATIONS

Provide wiring devices suitable for intended use and with ratings adequate for load served.

For single receptacles installed on an individual branch circuit, provide receptacle with ampere rating not less than that of the branch circuit.

Provide weather resistant GFI receptacles with specified weatherproof covers for all receptacles installed outdoors or in damp or wet locations.

Provide GFI protection for all receptacles installed within 6 feet of sinks.

Provide GFI protection for all receptacles installed in kitchens.

Provide GFI protection for all receptacles serving electric drinking fountains.

Unless noted otherwise, do not use combination switch/receptacle devices.

ALL WIRING DEVICES

Provide products listed and classified by Underwriters Laboratories Inc. as suitable for the purpose specified and indicated.

Finishes:

- Wiring Devices Installed in Finished Spaces: White with white nylon wall plate unless otherwise indicated.
- Wiring Devices Installed in Unfinished Spaces: Gray with galvanized steel wall plate unless otherwise indicated.
- Wiring Devices Installed in Wet or Damp Locations: White with specified weatherproof cover unless otherwise indicated.

WALL SWITCHES

All Wall Switches: AC only, quiet operating, general-use snap switches with silver alloy contacts, complying with NEMA WD 1 and NEMA WD 6, and listed as complying with UL 20 and where applicable, FS W-S-896; types as indicated on the drawings.

- Wiring Provisions: Terminal screws for side wiring and screw actuated binding clamp for back wiring with separate ground terminal screw.

Standard Wall Switches: Industrial specification grade, 20 A, 120/277 V with standard toggle type switch actuator and maintained contacts; single pole single throw, double pole single throw, three way, or four way as indicated on the drawings.

RECEPTACLES

All Receptacles: Self-grounding, complying with NEMA WD 1 and NEMA WD 6, and listed as complying with UL 498, and where applicable, FS W-C-596; types as indicated on the drawings.

Wiring Provisions: Terminal screws for side wiring or screw actuated binding clamp for back wiring with separate ground terminal screw.

NEMA configurations specified are according to NEMA WD 6.

Convenience Receptacles:

Standard Convenience Receptacles: Industrial specification grade, 20A, 125V, NEMA 5-20R; single or duplex as indicated on the drawings.

Weather Resistant Convenience Receptacles: Industrial specification grade, 20A, 125V, NEMA 5-20R,, listed and labeled as weather resistant type complying with UL 498 Supplement SE suitable for installation in damp or wet locations; single or duplex as indicated on the drawings.

GFI Receptacles:

All GFI Receptacles: Provide with feed-through protection, light to indicate ground fault tripped condition and loss of protection, and list as complying with UL 943, class A.

Standard GFI Receptacles: Industrial specification grade, duplex, 20A, 125V, NEMA 5-20R, rectangular decorator style.

Weather Resistant GFI Receptacles: Industrial specification grade, duplex, 20A, 125V, NEMA 5-20R, rectangular decorator style, listed and labeled as weather resistant type complying with UL 498 Supplement SE suitable for installation in damp or wet locations.

Or equal performance.

WALL PLATES

All Wall Plates: Comply with UL 514D.

Configuration: One piece cover as required for quantity and types of corresponding wiring devices.

Screws: Metal with slotted heads finished to match wall plate finish.

Nylon Wall Plates: Smooth finish, high-impact thermoplastic.

Stainless Steel Wall Plates: Brushed satin finish, Type 302 stainless steel.

Brass Wall Plates: Brushed satin finish, factory-coated to inhibit oxidation.

Aluminum Wall Plates: Smooth satin finish, clear anodized, factory-coated to inhibit oxidation.

Chrome Wall Plates: Smooth finish, chrome plated steel.

Galvanized Steel Wall Plates: Rounded corners and edges, with corrosion resistant screws.

Weatherproof Covers for Damp Locations: Gasketed, cast aluminum, with self-closing hinged cover and corrosion-resistant screws; listed as suitable for use in wet locations with cover closed.

Weatherproof Covers for Wet or Damp Locations: Gasketed, cast aluminum, with hinged lockable cover and corrosion-resistant screws; listed as suitable for use in wet locations while in use with attachment plugs connected.

PART 3 EXECUTION

EXAMINATION

Verify that field measurements are as shown on the drawings.

Verify that outlet boxes are installed in proper locations and at proper mounting heights and are properly sized to accommodate devices and conductors in accordance with NFPA 70.

Verify that wall openings are neatly cut and will be completely covered by wall plates.

Verify that final surface finishes are complete, including painting.

Verify that branch circuit wiring installation is completed, tested, and ready for connection to wiring devices.

Verify that conditions are satisfactory for installation prior to starting work.

PREPARATION

Provide extension rings to bring outlet boxes flush with finished surface.

Clean dirt, debris, plaster, and other foreign materials from outlet boxes.

INSTALLATION

Perform work in a neat and workmanlike manner in accordance with NECA 1 and, where applicable, NECA 130, including mounting heights specified in those standards unless otherwise indicated.

Coordinate locations of outlet boxes provided under Section 26 05 37 as required for installation of wiring devices provided under this section.

Mounting Heights: Unless otherwise indicated, as follows:

Wall Switches: 48 inches above finished floor.

Receptacles: 18 inches above finished floor or 6 inches above counter.

Orient outlet boxes for vertical installation of wiring devices unless otherwise indicated.

Where multiple receptacles, wall switches, or wall dimmers are installed at the same location and at the same mounting height, gang devices together under a common wall plate.

Locate wall switches on strike side of door with edge of wall plate 3 inches from edge of door frame. Where locations are indicated otherwise, notify Architect to obtain direction prior to proceeding with work.

Install wiring devices in accordance with manufacturer's instructions.

Where required, connect wiring devices using pigtails not less than 6 inches long. Do not connect more than one conductor to wiring device terminals.

Connect wiring devices by wrapping conductor clockwise 3/4 turn around screw terminal and tightening to proper torque specified by the manufacturer. Where present, do not use push-in pressure terminals that do not rely on screw-actuated binding.

Unless otherwise indicated, connect wiring device grounding terminal to branch circuit equipment grounding conductor and to outlet box with bonding jumper.

Provide GFI receptacles with integral GFI protection at each location indicated. Do not use feed-through wiring to protect downstream devices.

Install wiring devices plumb and level with mounting yoke held rigidly in place.

Install wall switches with OFF position down.

Install vertically mounted receptacles with grounding pole on top and horizontally mounted receptacles with grounding pole on left.

Install wall plates to fit completely flush to wall with no gaps and rough opening completely covered without strain on wall plate. Repair or reinstall improperly installed outlet boxes or improperly sized rough openings. Do not use oversized wall plates in lieu of meeting this requirement.

Install blank wall plates on junction boxes and on outlet boxes with no wiring devices installed or designated for future use.

Identify wiring devices in accordance with Section 26 05 53.

FIELD QUALITY CONTROL

Inspect each wiring device for damage and defects.

Operate each wall switch, wall dimmer, and fan speed controller with circuit energized to verify proper operation.

Test each receptacle to verify operation and proper polarity.

Test each GFCI receptacle for proper tripping operation according to manufacturer's instructions.

Correct wiring deficiencies and replace damaged or defective wiring devices.

ADJUSTING

Adjust devices and wall plates to be flush and level.

CLEANING

Clean exposed surfaces to remove dirt, paint, or other foreign material and restore to match original factory finish.

END OF SECTION

THIS PAGE INTENTIONALLY BLANK

PART 1GENERAL

SUMMARY

Section includes:

Interior luminaires.

Lamps.

Ballasts

Accessories.

RELATED SECTIONS

See Section 26 05 00 - Basic Electrical Materials and Methods.

SUBMITTALS

Procedures for submittals: See Section 260500.

Product Data: Submit dimensions, ratings, and performance data for each luminaire and lighting unit.

CLOSEOUT SUBMITTALS

Operations and Maintenance Data: Submit manufacturer's descriptive literature, operating instructions, cleaning procedures, replacements parts list, and maintenance and repair data. Submit recommended maintenance schedule.

Project Record Documents: See Section 260500

Record actual location of fixtures.

REGULATORY REQUIREMENTS

Conform to requirements of NFPA 70.

Furnish products listed by Underwriters Laboratories, Inc. or other testing firm acceptable to authority having jurisdiction.

Conform to applicable code for exit and exitway lighting equipment. Certify inspection and approval from authority having jurisdiction.

SPARE PARTS

Furnish 5% extra lamps and ballasts of each type.

PART 2PRODUCTS

LUMINAIRES

Product Description: Complete luminaire assemblies, with features, options, and accessories as indicated on Drawings.

Accessories: Provide for mounting and operation of each luminaire.

Thermal Protection: Provide thermal protection devices to meet NFPA 70 requirements.

FLUORESCENT BALLASTS

Manufacturers:

Magnetek Inc.

Advance

Philips Electronic North America

Or equal performance.

Product Description: Electronic ballast, suitable for lamps specified, with voltage to match luminaire voltage.

FLUORESCENT LAMPS

Manufacturers:

General Electric Corp.

Philips Electronic North America

Sylvania-Osram

Or equal performance.

PART 3EXECUTION

INSTALLATION

Install suspended luminaires using pendants supported from swivel hangers.

Locate recessed ceiling luminaires as indicated on Drawings.

Install surface mounted ceiling luminaires plumb and adjust to align with building lines and with each other. Secure to prevent movement.

Install lamps in luminaires and lampholders.

Support surface-mounted luminaires directly from building structure. Provide auxiliary support from structural members. T-grid ceilings shall not be used for support of fixtures.

Install recessed luminaires to permit removal from below. Use plaster frames or grid clips.

Luminaire pole bases: Construct as indicated on Drawings or per manufacturer's recommendation. Install poles on bases plumb. Provide for adjustment.

ADJUSTING AND CLEANING

Aim and align luminaires and lampholders as indicated or directed.

Clean lenses and diffusers at completion of work.

Clean paint splatters, dirt, and debris from installed luminaires.

Touch up luminaire and pole finish at completion of work.

Relamp luminaires, lighting units, and exit signs with failed lamps at Substantial Completion.

END OF SECTION

Senior Center Improvements

LUISA SENIOR CENTER
1500 LUISA STREET
SANTA FE, NEW MEXICO 87505

VILLA CONSUELO SENIOR CENTER
1200 CAMINO CONSUELO STREET
SANTA FE, NEW MEXICO 87507

PASATIEMPO SENIOR CENTER
664 ALTA VISTA STREET
SANTA FE, NEW MEXICO 87505

CODE ANALYSIS

Relevent Codes:
2009 New Mexico Commercial Building Code (NMCBC) – Title 14 Chapter 7 Part 2
Adopted Model Code: 2009 International Building Code (IBC) (as amended by 14.7.2)
2009 New Mexico Energy Conservation Code (NMECC) – Title 14 Chapter 7 Part 6
Adopted Model Code: 2009 International Energy Conservation Code (IECC)(as amended by 14.7.6)
2009 New Mexico Existing Building Code (NMEBC) – Title 14 Chapter 7 Part 7
Adopted Model Code: 2009 International Existing Building Code (IEBC) (as amended by 14.7.7)
Work is being performed per Chapter 3 – PERSCRIPTIVE COMPLIANCE METHOD
Section 302 – Additions
Section 303 – Alterations
Section 304 – Repairs
2009 New Mexico Plumbing Code (NMPC) – Title 14 Chapter 8 Part 2
Adopted Model Code: 2009 Uniform Plumbing Code (UPC)(as amended by 14.8.2)
2009 New Mexico Mechanical Code (NMMC) – Title 14 Chapter 9 Part 2
Adopted Model Code: 2009 Uniform Mechanical Code (UMC)(as amended by 14.9.2)
2009 New Mexico Electrical Code (NMEC) – Title 14 Chapter 10 Part 4
Adopted Model Code: 2011 National Electrical Code (NEC)(as amended by 14.10.4)
New Mexico State Fire Marshall Office
Adopted Model Code: 2003 International Fire Code

LUISA SENIOR CENTER ADDITION ANALYSIS

Work is being performed per 2009 New Mexico Existing Building Code (NMEBC) – Title 14 Chapter 7 Part 7
Adopted Model Code: 2009 International Existing Building Code (IEBC) (as amended by 14.7.7)
Chapter 3 – PERSCRIPTIVE COMPLIANCE METHOD
Section 302 – Additions
Section 303 – Alterations
Section 304 – Repairs as applicable

OCCUPANCY GROUP: (see diagram)	B (non-separated)
CONSTRUCTION CLASSIFICATION:	TYPE VB
ALLOWABLE HEIGHT (TABLE 503; A-3 USE)	1 STORY (40 FT)
PROPOSED HEIGHT:	1 STORY (18 FT)
ALLOWABLE BLDG AREA (TABLE 503; A-3 USE):	6,000 SF
PROPOSED BLDG AREA:	4,820 SF
SEISMIC SITE CLASSIFICATION	D

FIRE RESISTANCE RATING OF BUILDING ELEMENTS (TABLE 601):

PRIMARY STRUCTURAL FRAME	0 HOUR
BEARING WALLS – EXTERIOR	0 HOUR
BEARING WALL – INTERIOR	0 HOUR
NONBEARING WALLS AND PARTITIONS – EXTERIOR (FIRE SEPARATION DISTANCE ≥ 30 FEET)	0 HOUR
NONBEARING WALLS AND PARTITIONS – INTERIOR	0 HOUR
FLOOR CONSTRUCTION AND SECONDARY MEMBERS	0 HOUR
ROOF CONSTRUCTION AND SECONDARY MEMBERS	0 HOUR

[F] 906.1 Existing portable fire exfinguishers are currently installed in the following locations.
[Minimum Rated Single 2-A 10-B C Extinguisher provided at kitchens

FIRESTOPPING

At the proposed addition firestopping shall be provided to cut off all concealed draft openings (both vertical and horizontal) and between a top story and the roof space. Firestoppping shall be provided in the following locations:

1. In concealed spaces of stud walls and partitions, including furred spaces, at the ceiling and floor level.
2. At all interconnections between concealed vertical and horizontal spaces such as occur at soffits, drop ceilings, cove ceilings, etc..
3. At openings around vents, pipes, ducts, chimneys at ceiling and floor level, with noncombustible materials. Provide USG Firecode Compound or approved equal per manufacturer's instructions.

Except as provided in item 3 above, firestopping shall consist of 2-inch nominal lumber, or two thicknesses of 1-inch nominal lumber with broken lap joints, or one thickness of, 23/32-inch wood structural panels with joints backed by 23/32-inch wood structural panels or one thickness of 3/4 inch particleboard, or 5/8 inch gypsum board.

11 – ACCESSIBILITY
ACCESSIBILITY
Either UFAS or NMCBC (IBC Chapter 11) or DOJ 2010 Standards for Accessible Design (ADA) applies – whichever is more restrictive

UFAS 4.1.1 (1) At least one accessible route from site boundary, public transportation stops, accessible parking spaces and streets/sidewalks.
UFAS 4.1.1 (2) At least one accessible route shall connect accessible buildings, facilities, elements and spaces on same site.
UFAS 4.1.1 (3) Accessible route – no protruding obstructions.

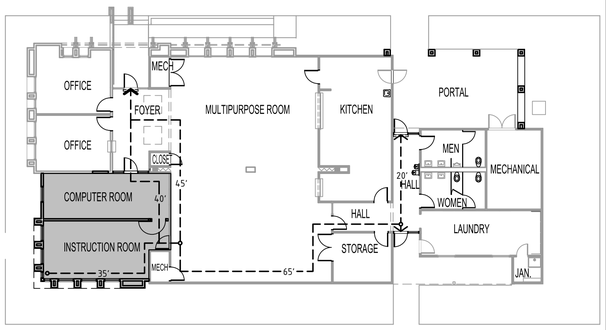

OCCUPANCY DIAGRAM LEGEND
- NEW ADDITION BUSINESS GROUP B 638sf / 100 = 7 OCCUPANTS
- EXISTING BUILDING NO CHANGE OF OCCUPANCY

EGRESS DIAGRAM LEGEND
- 65' EXIT ACCESS PATH WITH DISTANCE

EGRESS DIAGRAM NOTES
IBC TABLE 1016.1 EXIT ACCESS TRAVEL DISTANCE: A-2. B = 200 FEET

IBC TABLE 1021.1 MINIMUM NUMBER OF EXITS FOR OCCUPANT LOAD:
1-500 OCCUPANT LOAD = 2 EXITS

LEGEND

- 1A / A-A0.1 — ELEVATION INDICATES DRAWING 1A, SHEET A-A0.1
- 1A / A-A0.1 — SECTION INDICATES DRAWING 1A, SHEET A-A0.1
- 1A / A-A0.1 — SECTION DETAIL INDICATES DRAWING 1A, SHEET A-A0.1
- 1A / A-A0.1 — DETAIL INDICATES DRAWING 1A, SHEET A-A0.1
- H101 / A — WINDOW NUMBER INDICATES ROOM H101, DOOR A X = EXISTING WINDOW TO REMAIN
- H101 / A — DOOR NUMBER INDICATES ROOM H101, DOOR A X = EXISTING DOOR TO REMAIN
- SIDE OF HINGE — DOOR OR CABINET DOOR SWING
- FLOOR EL. 0'-0" — ELEVATION MARK
- 1 — PANEL SIGN TYPE INDICATED SIGN TYPE 1
- W1 — INTERIOR WALL TYPE INDICATES WALL TYPE W1
- BREAK LINE
- CENTER LINE
- LINE OF SOFFIT ABOVE
- OUTLINE OF HIDDEN CONSTRUCTION OR OBJECTS
- OUTLINE OF REMOVED ITEMS
- EXISTING CONSTRUCTION TO REMAIN (HALFTONE)
- EXISTING PARTITION TO BE REMOVED
- EXISTING PARTITION TO REMAIN (HALFTONE)
- NEW WALL TYPE VARIES PER PARTITION AND WALL TYPE LEGEND
- UNDISTURBED OR COMPACTED SUBGRADE
- TOP SOIL
- GRAVEL, DRAINAGE COURSE
- WOOD BLOCKING, FURRING, ROUGH DIMENSIONAL LUMBER
- METAL
- REINFORCED CONCRETE
- XPS RIGID INSULATION
- PLYWOOD
- FINISHED WOOD
- GYPSUM WALL BOARD

SITE LOCATION MAPS

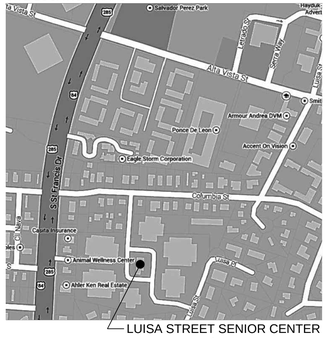

LUISA STREET SENIOR CENTER

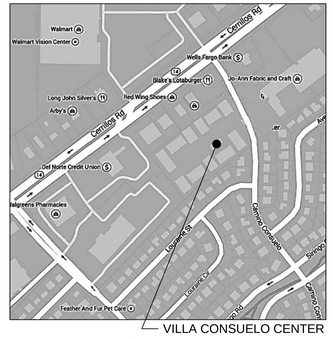

VILLA CONSUELO CENTER

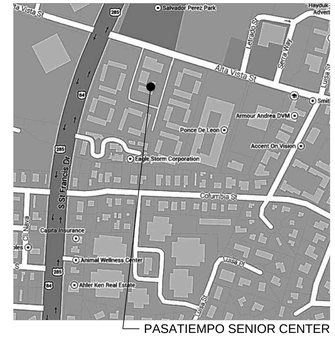

PASATIEMPO SENIOR CENTER

GENERAL NOTES

1. USE THESE DRAWING TOGETHER WITH THE SPECIFICATIONS PREPARED FOR THIS PROJECT.
2. ALL REFERENCES TO THE BUILDING CODE OR BUILDING DEPARTMENT SHALL BE CONSTRUED TO MEAN THE RULES AND REGULATIONS ADOPTED BY THE STATE OF NEW MEXICO.
3. ALL WORK AND MATERIALS SHALL BE IN ACCORDANCE WITH THE LATEST NEW MEXICO COMMERCIAL BUILDING CODE AND WITH THE LATEST RULES AND REGULATIONS OF ALL OTHER APPLICABLE STATE AND/OR LOCAL CODES, LAWS, ORDINANCES AND STATUTES. NOTHING IN THE DRAWINGS OR SPECIFICATIONS IS TO BE CONSTRUED AS REQUIRING OR PERMITTING WORK CONTRARY TO THESE RULES, REGULATIONS AND CODES. ALL WORK SHALL COMPLY WITH FIRE DEPARTMENT AND UTILITY COMPANY REQUIREMENTS. IN ALL CASES THE MOST RESTRICTIVE REQUIREMENTS SHALL APPLY.
4. IF THE CONTRACTOR ASCERTAINS AT ANY TIME THAT REQUIREMENTS OF THIS CONTRACT CONFLICT WITH, OR ARE IN VIOLATION OF APPLICABLE LAWS, CODES, REGULATIONS AND ORDINANCES, HE SHALL NOT PROCEED WITH WORK IN QUESTION EXCEPT AT HIS OWN RISK, UNTIL ARCHITECT HAS BEEN NOTIFIED IN WRITING AND WRITTEN DETERMINATION IN MADE BY THE ARCHITECT.
5. ADA COMPLIANCE: THE CONTRACTOR SHALL ENSURE ADA COMPLIANCE FOR CONSTRUCTION OF ADA FEATURES AND APPURTENANCES (INCLUDING, BUT NOT LIMITED TO, SIDEWALK & CURB RAMP CROSS SLOPES, RAMP SLOPES, LEVEL LANDINGS, ETC) AS DETAILED IN THE PLANS AND IN ACCORDANCE WITH REFERENCED STANDARD DRAWING, SPECIFICATIONS AND ESTABLISHED ADA GUIDELINES AND STANDARDS. THE CONTRACTOR IS RESPONSIBLE FOR FIELD CHECKING SLOPES AND DIMENSIONS OF ALL FORM WORK FOR COMPLIANCE PRIOR TO INSTALLATION OF CONCRETE. THE CITY RESERVES THE RIGHT TO INSPECT ANY ADA FEATURES AND APPURTENANCES AT ANY TIME BEFORE FINAL COMPLETION OF THE PROJECT AND MAY REQUIRE THE CONTRACTOR TO REMOVE, REPLACE, AND/OR CORRECT ANY WORK AT THE CONTRACTORS EXPENSE THAT IS NOT IN COMPLIANCE, AS DETERMINED BY THE PROJECT MANAGER.
6. PRIOR TO COMMENCEMENT OF WORK, THE CONTRACTOR SHALL REVIEW ALL CONTRACT DOCUMENTS, REPORTS AND RELATED INSTRUCTIONS. WHERE CONFLICTS/INCONSISTENCIES BETWEEN THE CONTRACT DRAWINGS, SPECIFICATIONS, FIELD CONDITIONS AND/OR THE BUILDING CODE ARE DISCOVERED, THE CONTRACTOR SHALL NOTIFY THE ARCHITECT IMMEDIATELY IN WRITING.
7. OBTAIN ALL REQUIRED PERMITS
8. THE CONTRACTOR SHALL VISIT THE PROJECT SITE TO FAMILIARIZE HIMSELF WITH EXISTING CONDITIONS AND TO VERIFY ALL ELEVATIONS, DIMENSIONS AND CONDITIONS OF EXISTING BUILDING(S) AND SITE. DISCREPANCIES BETWEEN THE CONTRACT DOCUMENTS AND THE ACTUAL FIELD CONDITIONS SHALL BE REPORTED TO THE ARCHITECT IN WRITING FOR CORRECTION PRIOR TO BIDDING.
9. IT IS THE RESPONSIBILITY OF THE CONTRACTOR TO SECURE THE WORK SITE TO RENDER IT ADEQUATELY PROTECTED AT ALL TIMES. THE CONTRACTOR SHALL BE RESPONSIBLE FOR DAMAGES RESULTING FROM FAILURE TO PROVIDE ADEQUATE PROTECTION.
10. THE WORK IS TO BE EXECUTED IN AND NEAR OCCUPIED BUILDING. TAKE PRECAUTIONS TO KEEP BUILDING WALKS, DRIVES, PARKING AREAS, COURTYARDS, ENTRIES, EXITS AND OTHER SIMILAR SPACES CLEAR OF MATERIALS, EQUIPMENT AND TOOLS AT ALL TIMES. PROVIDE BARRIERS, SIGNS AND TEMPORARY ENCLOSURES NECESSARY TO ASSURE SAFETY OF THE OCCUPANTS. TAKE PRECAUTIONS TO PROTECT THE BUILDINGS STRUCTURE, FINISHES, EQUIPMENT AND IMPROVEMENTS BY OTHERS FROM DAMAGE OR LOSS. BUILDINGS SHALL BE MADE WEATHERTIGHT AND SECURE AT THE END OF EACH WORK DAY.
11. PART OF THE WORK IS TO BE EXECUTED IN OCCUPIED BUILDINGS. AS THESE BUILDING PROVIDE ESSENTIAL PROGRAMS THE CONTRACTOR WILL NOT HAVE FREE ACCESS TO ALL BUILDINGS AT ALL TIMES. THE CITY OF SANTA FE WILL WORK CLOSELY WITH THE CONTRACTOR TO ESTABLISH A WORK SCHEDULE PRIOR TO BEGINNING THE WORK.
12. MOVE AND PROTECT ALL FURNISHINGS, FILING CABINETS, SHELVING, STORAGE ITEMS, EQUIPMENT, ARTWORK AND DECORATIONS IN THE AREAS TO BE PAINTED. UPON COMPLETION OF THE WORK REPLACE AND/OR REINSTALL ALL FURNISHINGS, FILING CABINETS, EQUIPMENT AND DECORATIONS AS THEY WERE PRIOR TO BEGINNING OF THE WORK.
13. ALL BUILDING EXITS NOT IN THE AREA OF THE WORK SHALL BE KEPT READILY ACCESSIBLE AND UNOBSTRUCTED AT ALL TIMES.
14. THE CONTRACTOR SHALL PERFORM HIS WORK SO THAT THERE IS A MINIMUM OF DISRUPTION CAUSED TO THOSE PORTIONS OF THE BUILDING(S) AND SITE WHERE THERE IS NO WORK TAKING PLACE.
15. ALL CONSTRUCTION REFUSE AND DEBRIS SHALL BE REMOVED FROM THE JOB SITE NOT LESS THAN ONCE A WEEK AND SHALL BE PROPERLY DISPOSED OF OFF THE PROPERTY.
16. DO NOT SCALE DRAWINGS. CONTRACTOR SHALL RELY ON WRITTEN DIMENSIONS AS GIVEN. THE CONTRACTOR SHALL NOTIFY THE ARCHITECT FOR CLARIFICATIONS. EXISTING CONDITIONS DIMENSIONS INDICATED ARE APPROXIMATE FINISH DIMENSIONS AND MAY VARY FROM ACTUAL DIMENSIONS ENCOUNTERED IN FIELD.
17. THERE WERE LIMITED EXISTING CONSTRUCTION DRAWINGS AVAILABLE TO THE ARCHITECT FOR THE PREPARATION OF THESE DOCUMENTS. IT IS THE CONTRACTOR'S RESPONSIBILITY TO VERIFY ALL NEW AND EXISTING JOB CONDITIONS, DIMENSIONS AND QUANTITY OF WORK. ANY DISCREPENCIES, INCONSISTANCIES OR OMISSIONS BETWEEN ACTUAL EXISTING CONDITIONS AND THE REPRESENTATIONS OF THOSE CONDITIONS SHOWN ON THE DRAWINGS SHALL BE BROUGHT TO THE ATTENTION OF THE ARCHITECT IN WRITING PRIOR TO PROCEEDING WITH THE WORK. THE COMMENCEMENT OF WORK IMPLIES ACCEPTANCE OF THE EXISTING CONDITIONS AS CONSISTENT WITH THE CONTRACT DOCUMENTS AND ACCEPTABLE FOR THE NEW WORK.
18. DIMENSIONS SHOWN ON FLOOR PLANS, SECTIONS, ELEVATIONS, AND DETAILS ARE TO ROUGH FRAMING UNLESS OTHERWISE NOTED. DIMENSIONS SHOWN IN EXISTING, FINISHED SPACES ARE TO FINISHED FACE OF WALL.
19. ALL WORK SHALL BE EXECUTED IN ACCORDANCE WITH THE BEST ACCEPTED TRADE PRACTICES. COMPLY WITH MANUFACTURERS PRINTED INSTRUCTIONS ALONG WITH THE SPECIFIED OR OTHERWISE RECOGNIZED STANDARDS OF AGENCIES AND ASSOCIATIONS FOR MATERIALS, INSTALLATION AND WORKMANSHIP.
20. THE CONTRACTOR SHALL ENSURE POSITIVE ROOF PITCH TO DRAIN OF ¼"-12" MINIMUM AT FLAT SINGLE MEMBRANE ROOFS.
21. POSITIVE DRAINAGE AWAY FROM THE BUILDING IS THE RESPONSIBILITY OF THE CONTRACTOR.
22. CONTRACTOR SHALL PROVIDE AND INSTALL ALL BLOCKING, STIFFENERS, BRACINGS, BACK-UP PLATES AND SUPPORTING BRACKETS REQUIRED FOR THE INSTALLATION OF WORK. BLOCKING IS REQUIRED FOR ALL WALL AND CEILING MOUNTED SPECIALTIES AND EQUIPMENT.
23. SECURE CONSTRUCTION MATERIALS AT ALL TIMES. THE OWNER CAN PROVIDE NO ON SITE STORAGE SPACE. THE OWNER SHALL NOT BE RESPONSIBLE FOR MATERIALS PRIOR TO FINAL ACCEPTANCE. ALL BUILDING MATERIALS STORED AT CONSTRUCTION AREAS ARE TO BE SECURED IN A LOCKED AREA. ACCESS TO SUCH AREAS IS TO BE CONTROLLED BY OWNER AND THE GENERAL CONTRACTOR. FLAMMABLE MATERIALS SHALL BE USED AND STORED IN AN ADEQUATELY VENTILATED SPACE. ALL FLAMMABLE MATERIALS SHALL BE KEPT SEALED IN THEIR MANUFACTURERS CONTAINERS AND KEPT AWAY FROM HEAT AND FLAME AND USED PER THE MANUFACTURER'S WRITTEN INSTRUCTIONS.
24. CONSTRUCTION OPERATIONS SHALL BE CONFINED TO NORMAL WORKING HOURS: 8:00 AM TO 5:00 PM MONDAY THRU FRIDAY EXCEPT LEGAL HOLIDAYS UNLESS THE CONTRACTOR RECEIVES PERMISSION IN WRITING FROM THE AUTHORITY.
25. CONSTRUCTION WORK WILL BE CONFINED TO THE AREAS SHOWN ON THE CONTRACT DOCUMENTS AND ANY ADDITIONAL AREAS THAT THE CONTRACTOR AND CITY OF SANTA FE MUTUALLY AGREE UPON. CONTRACTOR WILL LIMIT TO THE MINIMUM THE AMOUNT OF DUST, DIRT AND OTHER SUCH INCONVENIENCES CREATED TO ALL OTHER AREAS OF THE PROJECT SITE.
26. THE DRAWINGS INDICATE LOCATION, DIMENSION, AND TYPICAL DETAILS OF CONSTRUCTION, BUT DO NOT ILLUSTRATE EVERY CONDITION. WORK NOT PARTICULARLY DETAILED SHALL BE OF CONSTRUCTION SIMILAR TO PARTS DETAILED. MINOR DETAILS NOT USUALLY SHOWN OR SPECIFIED, BUT NECESSARY FOR PROPER CONSTRUCTION OF ANY PART OF THE WORK, SHALL BE INCLUDED AS IF THEY WERE INDICATED IN THE CONTRACT DOCUMENTS.
27. ABBREVIATIONS THROUGHOUT THE PLANS ARE THOSE IN COMMON USE. NOTIFY THE ARCHITECT OF ANY ABBREVIATIONS IN QUESTION.
28. IN THE CASE OF A CONFLICT BETWEEN THE DRAWINGS AND THE SPECIFICATIONS, THE MOST RESTRICTIVE SHALL TAKE PRECEDENCE. CONTRACTOR SHALL NOTIFY THE ARCHITECT TO RESOLVE ANY CONFLICT BEFORE PROCEEDING WITH THE WORK.
29. THE CONTRACTOR SHALL FURNISH ALL MATERIALS, LABOR, EQUIPMENT, TRANSPORTATION AND SERVICES NECESSARY FOR THE SATISFACTORY COMPLETION OF WORK UNLESS DESIGNATED (N.I.C.). ALL EQUIPMENT, WORK AND MATERIALS SHALL COMPLY WITH ALL CURRENT AND LOCAL APPLICABLE CODES AND GOVERNING REGULATIONS, AND THE CONTRACT DOCUMENTS. ONLY NEW MATERIALS AND EQUIPMENT OF RECENT MANUFACTURE, OF QUALITY SPECIFIED, FREE FROM DEFECTS, WILL BE PERMITTED ON THE WORK.
30. ALL WORK INDICATED ON DRAWINGS IS NEW WORK UNLESS SPECIFICALLY INDICATED AS EXISTING.
31. THE CONTRACTOR SHALL PROVIDE SUPERVISION FOR THE WORK AT ALL TIMES THAT CONSTRUCTION OPERATIONS ARE ONGOING. THE CONTRACTOR SHALL BE SOLELY RESPONSIBLE FOR AND HAVE CONTROL OVER CONSTRUCTION MEANS, METHODS, TECHNIQUES, SEQUENCES AND PROCEDURES AND FOR COORDINATING ALL PORTIONS OF THE WORK UNDER THE CONTRACT.
32. THE CONTRACTOR SHALL BE RESPONSIBLE FOR INITIATING, MAINTAINING AND SUPERVISING ALL SAFETY PRECAUTIONS AND PROGRAMS IN CONNECTION WITH THE PERFORMANCE OF THE WORK. ALL CONTRACTORS AND SUBCONTRACTORS PERFORMING WORK ON THE PREMISES SHALL BE RESPONSIBLE FOR INITIATING, MAINTAINING AND SUPERVISING A REASONABLE AND PRUDENT SAFETY PROGRAM INCLUDING BUT NOT LIMITED TO ISOLATION OF WORK AREAS AND THE PROMPT REMOVAL OF ANY DEBRIS OR TOOLS WHICH MIGHT ENDANGER THE PUBLIC, VISITORS AND STAFF OF THE OWNER OR ARCHITECT.
33. THE ARCHITECT SHALL BE CONSULTED IN ALL CASES WHERE CUTTING INTO AN EXISTING STRUCTURAL PORTION OF ANY BUILDING IS EITHER EXPEDIENT OR NECESSARY. PRIOR TO PROCEEDING WITH WORK, REINFORCEMENT AND/OR SUPPORT SATISFACTORY TO ARCHITECT AND STRUCTURAL ENGINEER SHALL BE PROVIDED BY CONTRACTOR PRIOR TO CUTTING INTO STRUCTURAL PORTIONS OF ANY BUILDING. CONTRACTOR TO PROVIDE ADEQUATE TEMPORARY BRACING AND SHORING WHENEVER STRUCTURAL WORK IS INVOLVED.
34. ALL DISSIMILAR METALLIC MATERIALS SHALL BE EFFECTIVELY ISOLATED FROM EACH OTHER TO PREVENT GALVANIC CORROSION.
35. ALL WOOD IN CONTACT WITH MASONRY OR CONCRETE SHALL BE PRESSURE TREATED WITH AN APPROVED PRESERVATIVE.
36. THE CONTRACTOR IS RESPONSIBLE FOR FINAL CLEAN UP AND DISPOSAL UPON COMPLETION OF WORK. REMOVE DEBRIS, RUBBISH AND WASTE MATERIAL FROM THE OWNER'S PROPERTY TO A LAWFUL DISPOSAL OR RECYCLING AREA AND PAY ALL HAULING AND DUMPING COSTS. CONFORM TO PERTAINING FEDERAL, STATE AND LOCAL LAWS, REGULATIONS, AND ORDERS. ALL CONSTRUCTION AREAS SHALL BE LEFT VACUUM OR WET MOP CLEAN AND FREE FROM DEBRIS. CLEAN ALL DUST, DIRT, STAINS, HAND MARKS, PAINT SPOTS, DROPPINGS, AND OTHER BLEMISHES.
37. TWO WORKING DAYS PRIOR TO ANY EXCAVATION, CONTRACTOR MUST CONTACT NEW MEXICO ONE CALL SYSTEM (505-260-1990, OR 811) AND DETERMINE LOCATION OF EXISTING UTILITIES.

PROJECT TEAM

Owner:
CITY OF SANTA FE
FACILITIES DIVISION
2651 Siringo Road, Building E
Santa Fe, NM 87504-0909

Architect of Record:
AUTOTROPH Inc.
422 Greg Avenue
Santa Fe, NM 87501
phone: (505) 216-7555

Structural Engineering:
CHAVEZ GRIEVES
4700 Lincoln Road NE
Albuquerque, NM 87109
phone: (505) 344-4080

Civil Engineering:
ANCHOR ENGINEERING
1035 S. Bosque Loop
Bosque Farms, NM 87068
phone: (505) 362-1530

Mechanical / Plumbing, Electrical Engineering:
M & E ENGINEERING, INC.
1222 Luisa Street
Santa Fe, NM 87505
phone: (505) 983-2389

CONSTRUCTION DRAWING INDEX

GENERAL
G0.0 COVER SHEET
G1.0 BID SCHEDULE

SUBSET L - LUISA SENIOR CENTER
ARCHITECTURAL
L-A1.0 EXISTING CONDITIONS AND REMOVALS PLAN
L-A1.1 FLOOR PLAN
L-A1.2 REFLECTED CEILING PLAN, RESTROOM PLANS
L-A1.3 ROOF PLAN
L-A2.0 EXISTING ELEVATIONS
L-A2.1 ELEVATIONS
L-A3.1 SECTIONS - ADDITION
L-A3.2 SECTIONS - PORTAL
L-A5.1 DOOR DETAILS, WINDOW DETAILS
L-A5.2 DETAILS

STRUCTURAL
L-S0.1 GENERAL STRUCTURAL NOTES
L-S1.1 FOUNDATION PLANS, FRAMING PLANS
L-S5.1 STRUCTURAL DETAILS

MECHANICAL - ELECTRICAL - PLUMBING
L-M0.0 MECHANICAL LEGEND AND GENERAL NOTES
L-M1.0 MECHANICAL DEMOLITION FLOOR PLAN
L-M1.1 MECHANICAL FLOOR PLAN
L-M5.0 MECHANICAL DETAILS
L-M6.0 MECHANICAL SCHEDULE
L-P0.0 PLUMBING LEGEND AND GENERAL NOTES
L-P1.0 PLUMBING DEMOLITION FLOOR PLAN
L-P1.1 PLUMBING FLOOR PLAN
L-E0.0 ELECTRICAL LEGEND AND GENERAL NOTES
L-E1.0 ELECTRICAL DEMOLITION FLOOR PLAN
L-E1.1 ELECTRICAL FLOOR PLAN LIGHTING
L-E1.2 ELECTRICAL FLOOR PLAN POWER
L-E6.0 ELECTRICAL RISER
L-E6.1 ELECTRICAL RISER

SUBSET P - PASATIEMPO SENIOR CENTER
ARCHITECTURAL
P-A1.1 FLOOR PLAN AND REFLECTED CEILING PLAN

SUBSET V - VILLA CONSULEO SENIOR CENTER
ARCHITECTURAL
V-A1.0 EXISTING CONDITION AND REMOVALS PLAN
V-A1.1 FLOOR PLAN
V-A1.2 REFLECTED CEILING PLAN, RESTROOM PLANS
V-A5.1 DETAILS

MECHANICAL - ELECTRICAL - PLUMBING
V-M0.0 MECHANICAL LEGEND AND GENERAL NOTES
V-M1.0 MECHANICAL DEMOLITION FLOOR PLAN
V-M1.1 MECHANICAL FLOOR PLAN
V-M5.0 MECHANICAL DETAILS
V-M6.0 MECHANICAL SCHEDULE
V-P0.0 PLUMBING LEGEND AND GENERAL NOTES
V-P1.0 PLUMBING DEMOLITION FLOOR PLAN
V-P1.1 PLUMBING FLOOR PLAN
V-E0.0 ELECTRICAL LEGEND AND GENERAL NOTES
V-E1.0 ELECTRICAL DEMOLITION FLOOR PLAN
V-E1.1 ELECTRICAL FLOOR PLAN LIGHTING
V-E1.2 ELECTRICAL FLOOR PLAN POWER
V-E6.0 ELECTRICAL RISER
V-E6.1 ELECTRICAL RISER

STATE OF NEW MEXICO
Alexander C. Dzurec
NO. 003942
11/4/14
REGISTERED ARCHITECT

autotroph
architecture.planning.sustainable design consulting

No.	Description	Date

SENIOR CENTER IMPROVEMENTS

LUISA	VILLA CONSUELO	PASATIEMPO
SENIOR CENTER	SENIOR CENTER	SENIOR CENTER
1500 LUISA STREET	1200 CAMINO CONSULO STREET	664 ALTA VISTA STREET
SANTA FE, NM 87504	SANTA FE, NM 87504	SANTA FE, NM 87504

GENERAL

COVER SHEET

Project number 1310
Date 1 OCTOBER 2014

G0.0

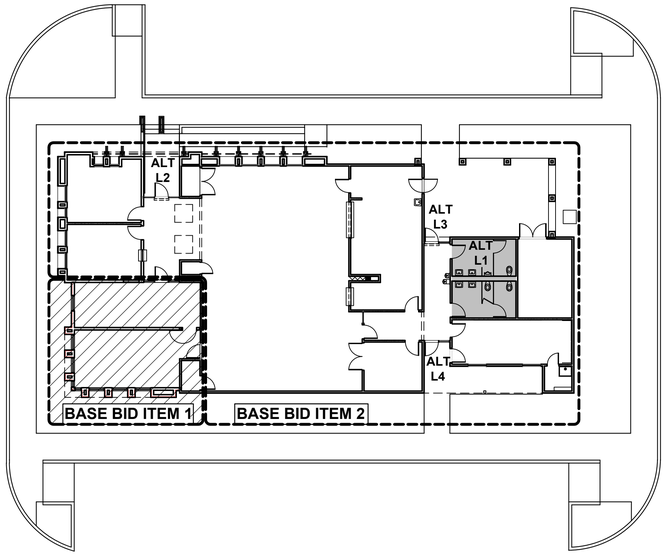

1D BASE BID ITEM 1 & 2 DIAGRAM - LUISA SENIOR CENTER
1/16"=1'-0"

BASE BID ITEM 1 - LUISA SENIOR CENTER ADDITION

ALL WORK DESCRIBED IN SUBSET L, PER THE DRAWING INDEX ON G0.0, RELATED TO THE PROPOSED ADDITION AT THE SOUTHEAST CORNER OF THE BUILDING

BASE BID ITEM 1 WORK SHALL INCLUDE ALL RELATED DEMOLITION, STRUCTURAL, MECHANICAL ELECTRICAL AND PLUMBING WORK EVEN IF IT OCCURS OUTSIDE OF THE DEMARCATED AREA.

BASE BID ITEM 2 - LUISA SENIOR CENTER IMPROVEMENTS

ALL WORK DESCRIBED IN SUBSET L, PER THE DRAWING INDEX ON G0.0, NOT INCLUDED IN BID ITEM 1 (ADDITION) AND NOT INCLUDED IN ATERNATE L1, L2, L3 AND L4

ALTERNATE L1 - LUISA RESTROOM IMPROVEMENTS

ALL WORK DESCRIBED IN SUBSET L, PER THE DRAWING INDEX ON G0.0, RELATED TO THE WORK INSIDE THE WOMENS ROOM 104 (SHADED ON DIAGRAM) AND MENS ROOM 105 (SHADED ON DIAGRAM)

ALTERNATE L1 DOES NOT INCLUDE THE ACOUSTICAL TILE CEILING REPLACEMENT, THE ROOM DOOR REPLACEMENT, PAINTING AND ALL HVAC WORK IN THE RESTROOM AREAS WHICH SHALL BE INCLUDED IN BASE BID ITEM 2

ALTERNATE L2 - LUISA DOOR 114A MODIFICATIONS

ALL WORK DESCRIBED IN SUBSET L, PER THE DRAWING INDEX ON G0.0, RELATED TO MODIFYING DOOR 114A INCLUDING INSTALLING THE AUTOMATIC OPERATOR

ALTERNATE L3 - LUISA DOOR 106A REPLACEMENT

ALL WORK DESCRIBED IN SUBSET L, PER THE DRAWING INDEX ON G0.0, RELATED TO REPLACING DOOR 106A INCLUDING REPLACING DOOR FRAME, GLAZING, HARDWARE AND INSTALLING THE AUTOMATIC OPERATOR

ALTERNATE L4 - LUISA DOOR 106B REPLACEMENT

ALL WORK DESCRIBED IN SUBSET L, PER THE DRAWING INDEX ON G0.0, RELATED TO REPLACING DOOR 106B INCLUDING REPLACING DOOR FRAME, GLAZING AND HARDWARE

BID NOTES:

APPLICABLE REQUIREMENTS INDICATED ON DRAWING G0.0 SHALL BE INCLUDED IN ALL BID ITEMS.

REFER TO APPLICABLE SPECIFICATION SECTIONS AND SCHEDULES FOR ADDITIONAL REQUIREMENTS FOR ALL BASE BID AND ALTERNATE WORK.

ALTERNATE WORK SHALL INCLUDE ALL RELATED SELECTIVE DEMOLITION, REMOVALS, ARCHITECTURAL, STRUCTURAL, MECHANICAL ELECTRICAL AND PLUMBING WORK EVEN IF IT OCCURS OUTSIDE OF THE DEMARCATED AREA.

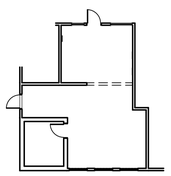

1C BASE BID ITEM 3 DIAGRAM - PASATIEMPO SENIOR CENTER
1/16"=1'-0"

BASE BID ITEM 3 - PASATIEMPO SENIOR CENTER IMPROVEMENTS

ALL WORK DESCRIBED IN SUBSET P, PER THE DRAWING INDEX ON G0.0, EXCEPT THE WORK INCLUDED IN ALTERNATE P1

ALTERNATE P1 - PASATIEMPO PAINTING

ALL WORK DESCRIBED IN SUBSET P, PER THE DRAWING INDEX ON G0.0, AND THE FINISH SCHEDULE (SPECIFICATION SECTION 090000) RELATED TO PAINTING WORK. ALL WALL FINISHING WORK PRIOR TO PAINTING SHALL BE INCLUDED IN BASE BID ITEM 3

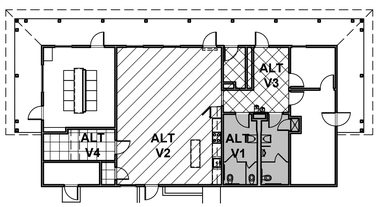

1A BASE BID ITEM 4 DIAGRAM - VILLA CONSUELO SENIOR CENTER
1/16"=1'-0"

BASE BID ITEM 4 - VILLA COMSUELO SENIOR CENTER IMPROVEMENTS

ALL WORK INCLUDED IN SUBSET V, PER THE DRAWING INDEX ON G0.0, EXCEPT THE WORK INCLUDED IN ALTERNATE V1, V2, V3, V4 AND V5.

ALTERNATE V1 - VILLA CONSUELO RESTROOM IMPROVEMENTS

ALL WORK DESCRIBED IN SUBSET V, PER THE DRAWING INDEX, RELATED TO THE WORK INSIDE THE WOMENS ROOM 107 (SHADED ON DIAGRAM) THE MENS ROOM 106 (SHADED ON DIAGRAM) AND THE JANITORS CLOSET 105

ALTERNATE V1 DOES NOT INCLUDE THE ACOUSTICAL TILE CEILING REPLACEMENT AND ALL HVAC WORK IN THE RESTROOM AREAS WHICH SHALL BE INCLUDED IN BASE BID ITEM 4

ALTERNATE V2 - VILLA CONSUELO CERAMIC TILE FLOORING

ALL WORK DESCRIBED IN SUBSET V, PER THE DRAWING INDEX, AND THE FINISH SCHEDULE (SPECIFICATION SECTION 090000) RELATED TO THE REPLACEMENT OF THE EXISTING CEMENTITIOUS AND RESILIENT FINISH FLOORING WITH CERAMIC TILE FLOORING AND BASE IN THE FOLLOWING ROOM:

COMMUNITY ROOM-109.

ALTERNATE V3 - VILLA CONSUELO CERAMIC TILE FLOORING

ALL WORK DESCRIBED IN SUBSET V, PER THE DRAWING INDEX, AND THE FINISH SCHEDULE (SPECIFICATION SECTION 090000) RELATED TO THE REPLACEMENT OF THE EXISTING CEMENTITIOUS AND RESILIENT FINISH FLOORING WITH CERAMIC TILE FLOORING AND BASE IN THE FOLLOWING ROOMS:

LOBBY-103
HALL-104
MAIL-108.

ALTERNATE V4 - VILLA CONSUELO CERAMIC TILE FLOORING

ALL WORK DESCRIBED IN SUBSET V, PER THE DRAWING INDEX, AND THE FINISH SCHEDULE (SPECIFICATION SECTION 090000) RELATED TO THE REPLACEMENT OF THE EXISTING CEMENTITIOUS AND RESILIENT FINISH FLOORING WITH CERAMIC TILE FLOORING AND BASE IN THE FOLLOWING ROOMS:

CRAFTS-111
CLOSET-113

ALTERNATE V5 - VILLA CONSUELO INTERIOR DOOR REPLACEMENT

ALL WORK DESCRIBED IN SUBSET V, PER THE DRAWING INDEX ON G0.0, THE SPECIFICATIONS AND SCHEDULES, RELATED TO REPLACING INTERIOR WOOD DOORS INCLUDING REPLACING DOORS, DOOR FRAMES AND HARDWARE

autotroph
architecture.planning.sustainable design consulting

No.	Description	Date

SENIOR CENTER IMPROVEMENTS

LUISA	VILLA CONSUELO	PASATIEMP0
SENIOR CENTER	SENIOR CENTER	SENIOR CENTER
1500 LUISA STREET	1200 CAMINO CONSUELO STREET	664 ALTA VISTA STREET
SANTA FE, NM 87504	SANTA FE, NM 87504	SANTA FE, NM 87504

GENERAL

BID SCHEDULE

Project number 1310

Date 1 OCTOBER 2014

G1.0

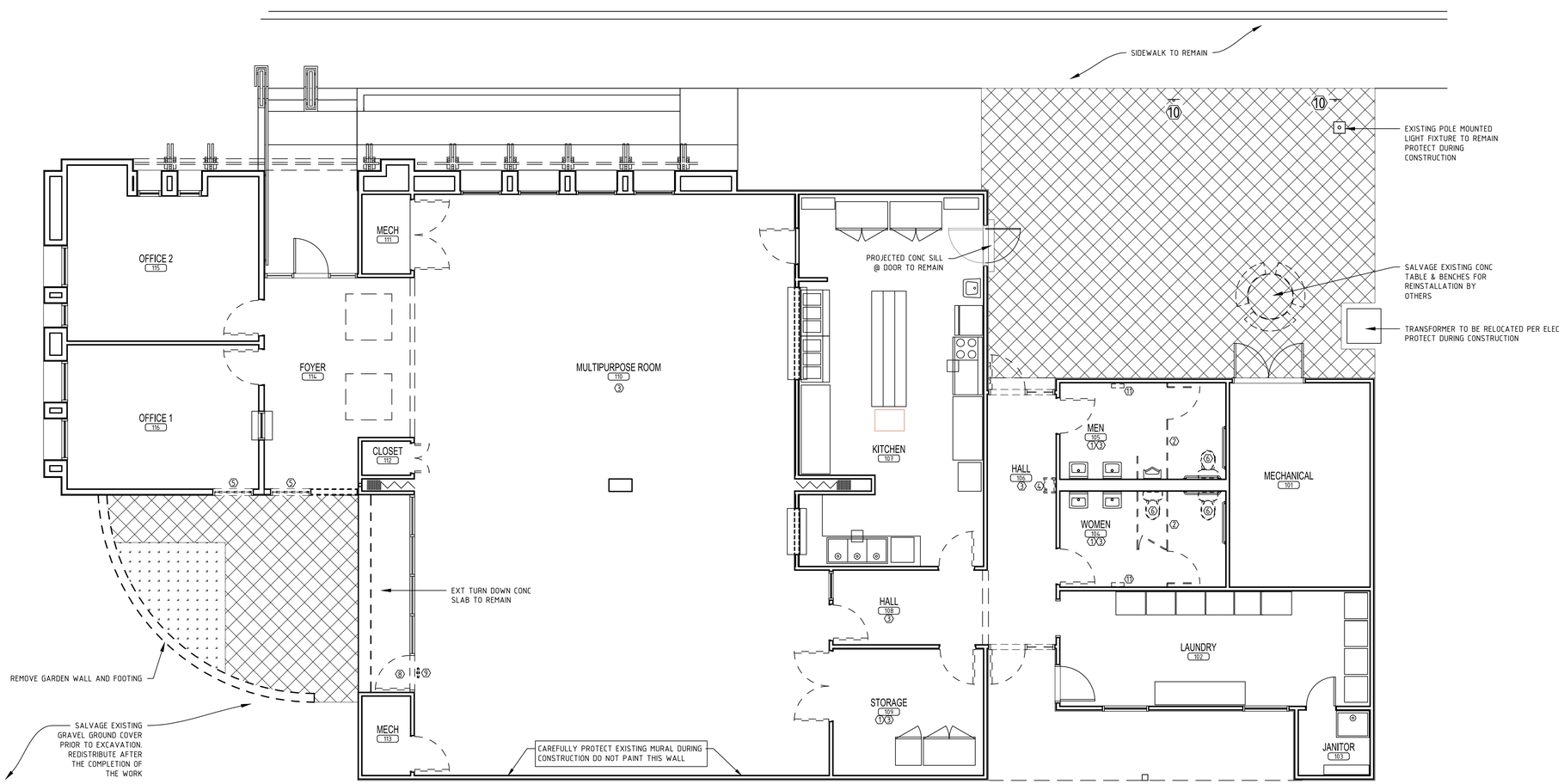

LEGEND - REMOVALS

- REMOVE WALL CONSTRUCTION
- REMOVE DOOR, DOOR FRAME, THRESHOLD AND ASSOCIATED HARDWARE
  NOTE: AT DOOR 106A AND 106B SALVAGE EXISTING ELECTRONIC LOCKSET AND DELIVER TO OWNER
- REMOVE CONCRETE PAVING
- REMOVE SHRUBS AND STUMP INCLUDING ROOTS WITHIN THE PROPOSED BUILDING LINE PER STRUCTURAL

GENERAL NOTES - REMOVALS

1. THE OWNER RESERVES THE RIGHT TO SALVAGE ANY EXISTING EQUIPMENT OR MATERIALS (EVEN IF INDICATED TO BE REMOVED) FROM THE PROJECT SITE AT ANY TIME PRIOR TO SELECTIVE DEMOLITION.
2. CONTRACTOR SHALL CAREFULLY RELOCATE AND PROTECT FROM DAMAGE ALL FURNITURE AND EQUIPMENT PRIOR TO BEGINNING WORK AND REINSTALL ON ORIGINAL LOCATION AT THE COMPLETION OF THE WORK.
3. COORDINATE REMOVAL OF EXISTING UTILITIES WITH THE ONGOING USE OF THE FACILITY BY THE OWNER. DO NOT INTERRUPT UTILITIES SERVICING SPACES USED BY THE OWNER AT ANY TIME DURING CONSTRUCTION WITHOUT WRITTEN APPROVAL OF THE OWNER.
4. AT ROOFING REMOVALS PROVIDE TEMPORARY WEATHER PROTECTION DURING THE INTERVAL BETWEEN REMOVAL OF THE EXISTING ROOFTOP EQUIPMENT AND THE INSTALLATION OF NEW EQUIPMENT TO INSURE THAT NO WATER INFILTRATION OR DAMAGE OCCURS TO STRUCTURE OR INTERIOR AREAS OF EXISTING BUILDING
5. SEE MECHANICAL, ELECTRICAL AND PLUMBING DRAWING FOR ADDITIONAL REMOVALS
6. SEE PROJECT MANUAL FOR ADDITIONAL REQUIREMENTS
7. PATCH ALL AREAS WHERE EXISTING CONSTRUCTION HAS BEEN REMOVED AND/OR NEW WORK ABUTS EXISTING. MATCH ALL SURFACES AS REQUIRED
8. DEBRIS SHALL BE CARTED AWAY FROM THE SITE AS A ROUTINE OPERATION AND LEGALLY DISPOSED OF.
9. REMOVE ANY BUILT-UP DIRT OR GRIME FROM ALL SURFACES TO RECEIVE PAINT PRIOR TO PAINTING.
10. CAP AN REMOVE EXISTING SUBGRADE IRRIGATION SYSTEM 2'-0" OUTSIDE OF THE PROPOSED ADDITION FOOTPRINT.

KEYED NOTES - REMOVALS

1. 1AYERS OF THE EXISTING VCT AND MASTIC CONTAIN HAZARDOUS MATERIALS AND WILL BE ABATED BY OTHERS PRIOR TO THE WORK.
2. REMOVE ALL TOILET PARTITIONS AND URINAL SCREEN. SALVAGE ALL PARTITION MOUNTED TOILET ACCESSORIES FOR REINSTALLATION.
3. REMOVE SUSPENDED CEILING TILES, GRID SYSTEMS AND LIGHT FIXTURES. REMOVE, THOROUGHLY CLEAN AND REINSTALL EXISTING, HVAC DIFFUSERS, HVAC GRILLES SMOKE DETECTORS, AND ALL OTHER CEILING MOUNTED DEVICES AFTER CEILING INSTALLATION IS COMPLETE. SEE MEP DRAWINGS AND REFLECTED CEILING PLAN FOR ADDITIONAL INFORMATION.
4. REMOVE DRINKING FOUNTAIN PER PLUMBING
5. REMOVE WINDOW FRAME, SASH AND GLAZING
6. REMOVE TANK TYPE TOILETS PER PLUMBING
7. IN MEN'S AND WOMAN'S ROOM REMOVE & REINSTALL URINAL, LAVATORIES, GRAB BARS AND ACCESSORIES AS REQUIRED TO INSTALL CERAMIC TILE FLOOR AND WAINSCOT. REINSTALL WHEN TILE WORK IS COMPLETE. SEE PLUMBING FOR ADDITIONAL INFORMATION
8. REMOVE DOOR DOOR HARDWARE AND THRESHOLD. HOLLOW METAL FRAME AND GLAZING TO REMAIN.
9. REMOVE EXIT SIGN
10. REMOVE EXISTING ADA PARKING SIGN. REMOVE CONCRETE FOOTING DELIVER SIGN TO OWNER FOR REINSTALLATION BY OTHERS.
11. REMOVE EXISTING HAND DRYER. SALVAGE AND DELIVER TO OWNER.

2A EXISTING CONDITIONS AND REMOVALS PLAN
3/16"=1'-0"

STATE OF NEW MEXICO
Alexander C. Dzurec
NO. 003942
11/4/14
REGISTERED ARCHITECT

autotroph
architecture.planning.sustainable design consulting

No.	Description	Date

SENIOR CENTER IMPROVEMENTS

LUISA	VILLA CONSUELO	PASATIEMPO
SENIOR CENTER	SENIOR CENTER	SENIOR CENTER
1500 LUISA STREET	1200 CAMINO CONSUELO STREET	664 ALTA VISTA STREET
SANTA FE, NM 87504	SANTA FE, NM 87504	SANTA FE, NM 87504

LUISA SENIOR CENTER

EXISTING CONDITIONS AND REMOVALS PLAN

Project number 1310

Date 1 OCTOBER 2014

L-A1.0

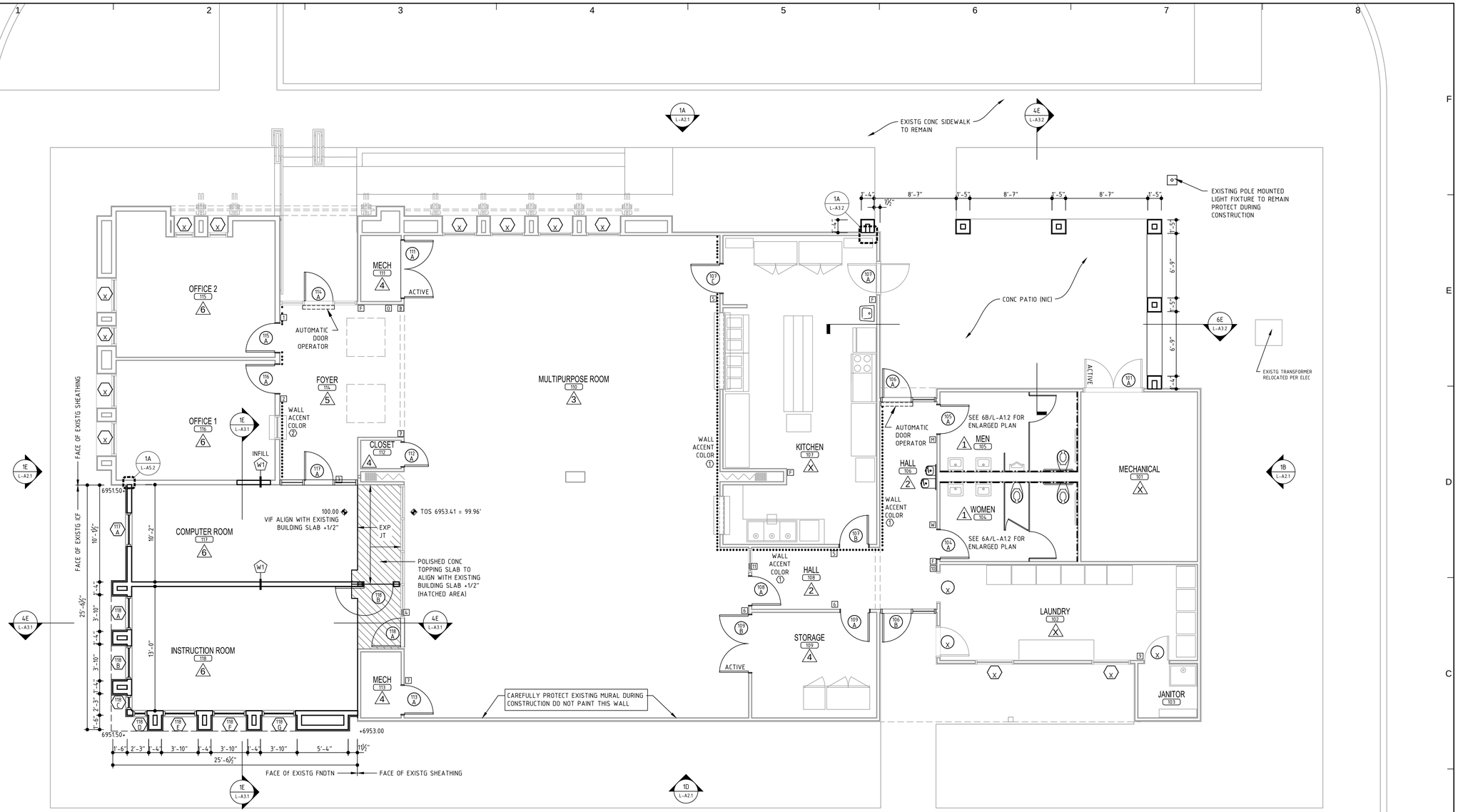

INTERIOR PAINTING NOTES

1. REMOVE ALL ELECTRICAL DEVICE FACE PLATES IN ALL SPACES PRIOR TO PAINTING AND REINSTALL WHEN PAINT IS DRY.
2. REMOVE ALL BULLETIN BOARDS IN ALL SPACES PRIOR TO PAINTING AND REINSTALL WHEN PAINT IS DRY.
3. REMOVE ALL SIGNAGE, PLACARDS PAINTINGS AND DECORATIONS IN ALL SPACES ON WALLS AND DOORS PRIOR TO PAINTING AND DELIVER TO OWNER.
4. PATCH AND SAND WALLS AND EXISTING DOORS TO REMAIN SMOOTH PRIOR TO PAINTING.
5. DO NOT PAINT SUSPENDED ACOUSTIC TILE CEILINGS.
6. TAKE EXTREME CARE WHEN PAINTING NEAR SMOKE DETECTORS. PROTECT (COVER) SMOKE DETECTORS DURING PAINTING OPERATIONS. NO PAINT IS PERMITTED ON SMOKE DETECTORS. PROMPTLY REMOVE ANY PAINT.
7. AT EXISTING DOORS TO REMAIN REMOVE HARDWARE, FILL OBSOLETE HOLES AND SAND DOORS SMOOTH PRIOR TO PAINTING. INSTALL HARDWARE WHEN PAINT IS DRY.
8. ALL DOORS MUST CLOSE AFTER PAINTING WITHOUT RUBBING FRAME. ALL SELF-CLOSING DOORS MUST LATCH AFTER PAINTING WITHOUT HELP. REMOVE PAINT BUILD-UP AS REQUIRED PRIOR TO PAINTING UNTIL DOORS WILL NOT RUB FRAME AND LATCH WITHOUT HELP.

INTERIOR PAINTING SCHEDULE

X NO PAINTING WORK IN THIS SPACE

1 WOMEN 104, MEN 105

1. WALLS - COLOR A
   SATIN (EGGSHELL) FINISH
2. DOORS - FACTORY FINISH
3. DOOR FRAMES - COLOR B
   SEMI-GLOSS FINISH
3. DO NOT PAINT CEILING.

2 HALL 106, HALL 108

1. WALLS - COLOR C
   SATIN (EGGSHELL) FINISH

ACCENT COLOR 1 ••••••••••••COLOR 1 (EGGSHELL FINISH)

2. DOORS - FACTORY FINISH
3. DOOR FRAMES - COLOR B
   SEMI-GLOSS FINISH
3. DO NOT PAINT CEILING.

3 MULTIPURPOSE ROOM 110

1. WALLS - COLOR D
   SATIN (EGGSHELL) FINISH

ACCENT COLOR 1 ••••••••••••COLOR 1 (EGGSHELL FINISH)

2. DOORS - FACTORY FINISH
3. DOOR FRAMES - COLOR B
   SEMI-GLOSS FINISH
3. DO NOT PAINT CEILING.

4 STORAGE 109, MECHANICAL 111, CLOSET 112, MECHANICAL 113

1. WALLS - COLOR E
   SATIN (EGGSHELL) FINISH
2. WOOD SHELVING - COLOR E
   SEMI-GLOSS FINISH
3. DOORS - FACTORY FINISH
4. DOOR FRAMES - COLOR B
   SEMI-GLOSS FINISH
3. GWB CEILING - COLOR E
   FLAT FINISH

5 FOYER 114

1. WALLS - COLOR D
   SATIN (EGGSHELL) FINISH

ACCENT COLOR 2 ••••••••••••COLOR 2 (EGGSHELL FINISH)

2. DOORS - FACTORY FINISH
3. DOOR FRAMES - COLOR B
   SEMI-GLOSS FINISH
3. GWB CEILING - COLOR E
   FLAT FINISH

6 OFFICE 2 - 115, OFFICE 1 - 116, COMPUTER ROOM - 117, INSTRUCTION ROOM - 118

1. WALLS - COLOR E
   SATIN (EGGSHELL) FINISH
2. DOORS - FACTORY FINISH
3. DOOR FRAMES - COLOR B
   SEMI-GLOSS FINISH
3. GWB CEILING - COLOR E
   FLAT FINISH

2A FLOOR PLAN
3/16"=1'-0"

STATE OF NEW MEXICO
Alexander C. Dzurec
NO. 003942
11/4/14
REGISTERED ARCHITECT

autotroph
architecture.planning.sustainable design consulting

No.	Description	Date

SENIOR CENTER IMPROVEMENTS

LUISA	VILLA CONSUELO	PASATIEMPO
SENIOR CENTER	SENIOR CENTER	SENIOR CENTER
1500 LUISA STREET	1200 CAMINO CONSUELO STREET	664 ALTA VISTA STREET
SANTA FE, NM 87504	SANTA FE, NM 87504	SANTA FE, NM 87504

LUISA SENIOR CENTER

FLOOR PLAN

Project number 1310

Date 1 OCTOBER 2014

L-A1.1

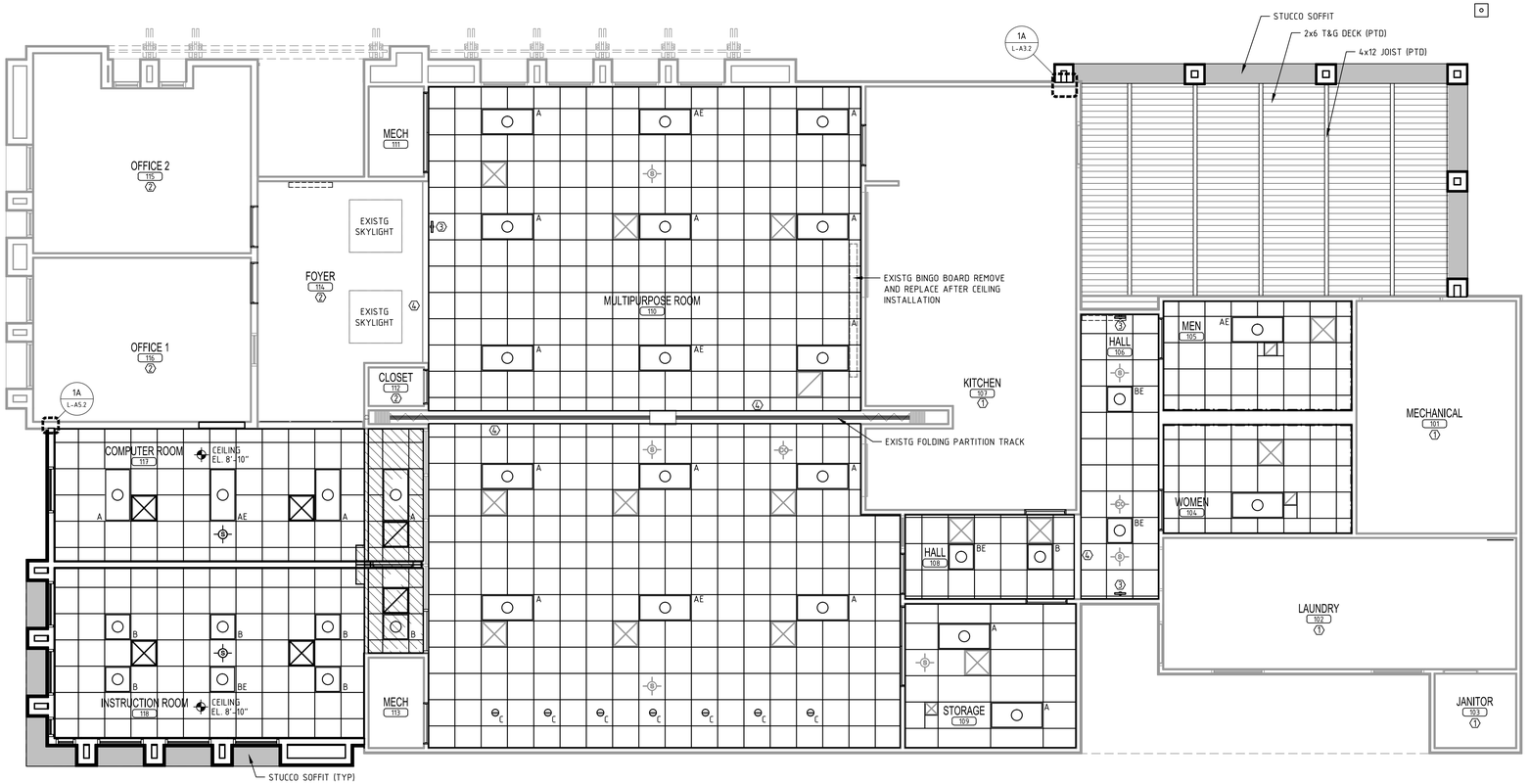

2C REFLECTED CEILING PLAN
3/16"=1'-0"

LEGEND - REFLECTED CEILING PLAN

- LIGHT FIXTURE PER ELECTRICAL INDICATES TYPE "A"
- LIGHT FIXTURE PER ELECTRICAL INDICATES TYPE "C"
- EXISTING SMOKE DETECTOR REMOVE, CLEAN AND REINSTALL
- SMOKE DETECTOR PER ELECTRICAL
- EXISTING CO DETECTOR REMOVE, CLEAN AND REINSTALL
- EXISTING CEILING DIFFUSER PER MECHANICAL REMOVE, CLEAN AND REINSTALL
- CEILING DIFFUSER PER MECHANICAL
- EXISTING RETURN GRILL PER MECHANICAL REMOVE, CLEAN AND REINSTALL
- RETURN GRILL DIFFUSER PER MECHANICAL

GENERAL NOTES - REFLECTED CEILING PLAN

1. THROUGHLY CLEAN ALL HVAC DEFUSERS, GRILLS AND OTHER EXISTING CEILING MOUNTED DEVICES PRIOR TO REINSTALLATION.
2. INSTALL CEILING GRID CENTERED IN ROOM UNLESS NOTED OTHERWISE
3. INSTALL CEILING GRID AT SAME HEIGHT AS EXISTING GRID UNLESS NOTED OTHERWISE
4. ALL CEILING TILES SHALL BE ACT-1 "FINE FISSURED" IN 2x2 GRID EXCEPT ON ROOM 109 - STORAGE WHICH SHALL BE ACT-2 "CLEAN ROOM VL IN 2x4 GRID.
5. SEE MEP DRAWINGS FOR ADDITIONAL INFORMATION

KEYED NOTES - REFLECTED CEILING PLAN

1. EXISTING CEILING TO REMAIN - NO WORK
2. EXISTING GWB CEILING TO REMAIN - PAINTED
3. EXISTING CEILING MOUNTED EXIT SIGN. REMOVE, THROUGHLY CLEAN AND REINSTALL AFTER CEILING INSTALLATION
4. EXISTING GWB BULKHEAD - PAINTED

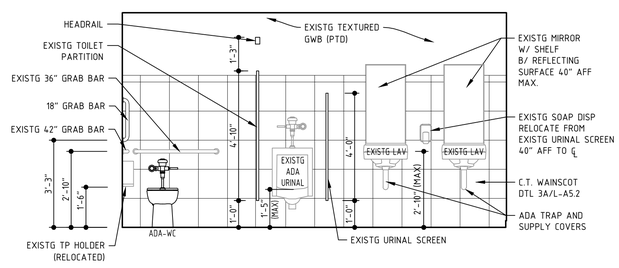

2B ELEVATION - MENS ROOM 105 (WEST)
3/8"=1'-0"

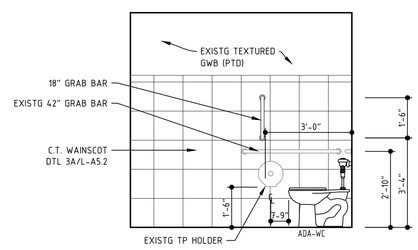

4B ELEVATION - MENS ROOM 105 (NORTH)
3/8"=1'-0"

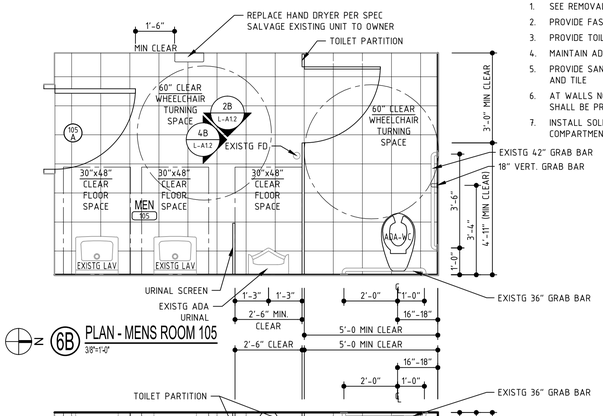

6B PLAN - MENS ROOM 105
3/8"=1'-0"

1. SEE REMOVAL DRAWINGS FOR ADDITIONAL NOTES.
2. PROVIDE FASTENERS AND OTHER HARDWARE AS REQUIRED.
3. PROVIDE TOILET SEAL AT DRAIN
4. MAINTAIN ADA CLEARANCES AND MOUNTING HEIGHTS AS INDICATED.
5. PROVIDE SANITARY SEALANT AT JOINTS BETWEEN ALL FIXTURES AND TILE
6. AT WALLS NOT SHOWN IN ELEVATION ONLY CERAMIC TILE BASE SHALL BE PROVIDED PER 4A/L-A5.2
7. INSTALL SOLID BLOCKING AS REQUIRED OR GRAB BARS AND TOILET COMPARTMENTS

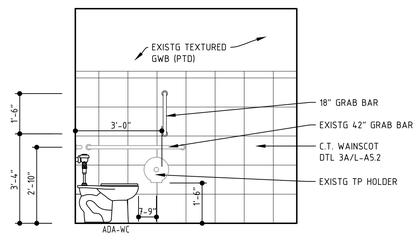

2A ELEVATION - WOMENS ROOM 104 (NORTH)
3/8"=1'-0"

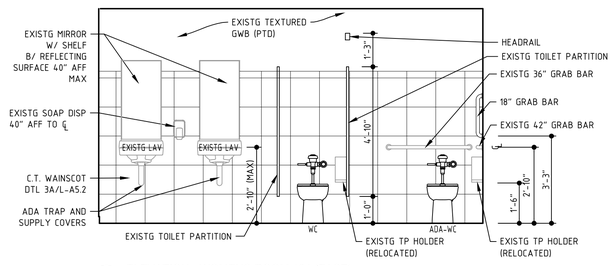

4A ELEVATION - WOMENS ROOM 104 (EAST)
3/8"=1'-0"

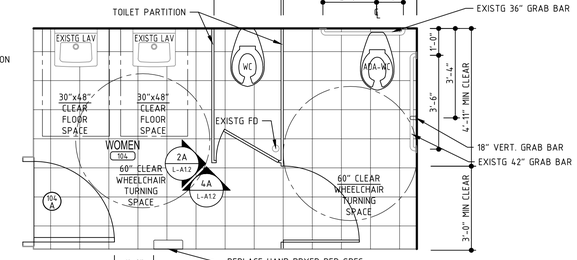

6A PLAN - WOMENS ROOM 104
3/8"=1'-0"

STATE OF NEW MEXICO
Alexander C. Dzurac
NO. 003942
11/4/14
REGISTERED ARCHITECT

autotroph
architecture.planning.sustainable design consulting

No.	Description	Date

SENIOR CENTER IMPROVEMENTS

LUISA
SENIOR CENTER
1500 LUISA STREET
SANTA FE, NM 87504

VILLA CONSUELO
SENIOR CENTER
1200 CAMINO CONSUELO STREET
SANTA FE, NM 87504

PASATIEMPO
SENIOR CENTER
664 ALTA VISTA STREET
SANTA FE, NM 87504

LUISA SENIOR CENTER

REFLECTED CEILING PLAN
RESTROOM PLANS

Project number 1310

Date 1 OCTOBER 2014

L-A1.2

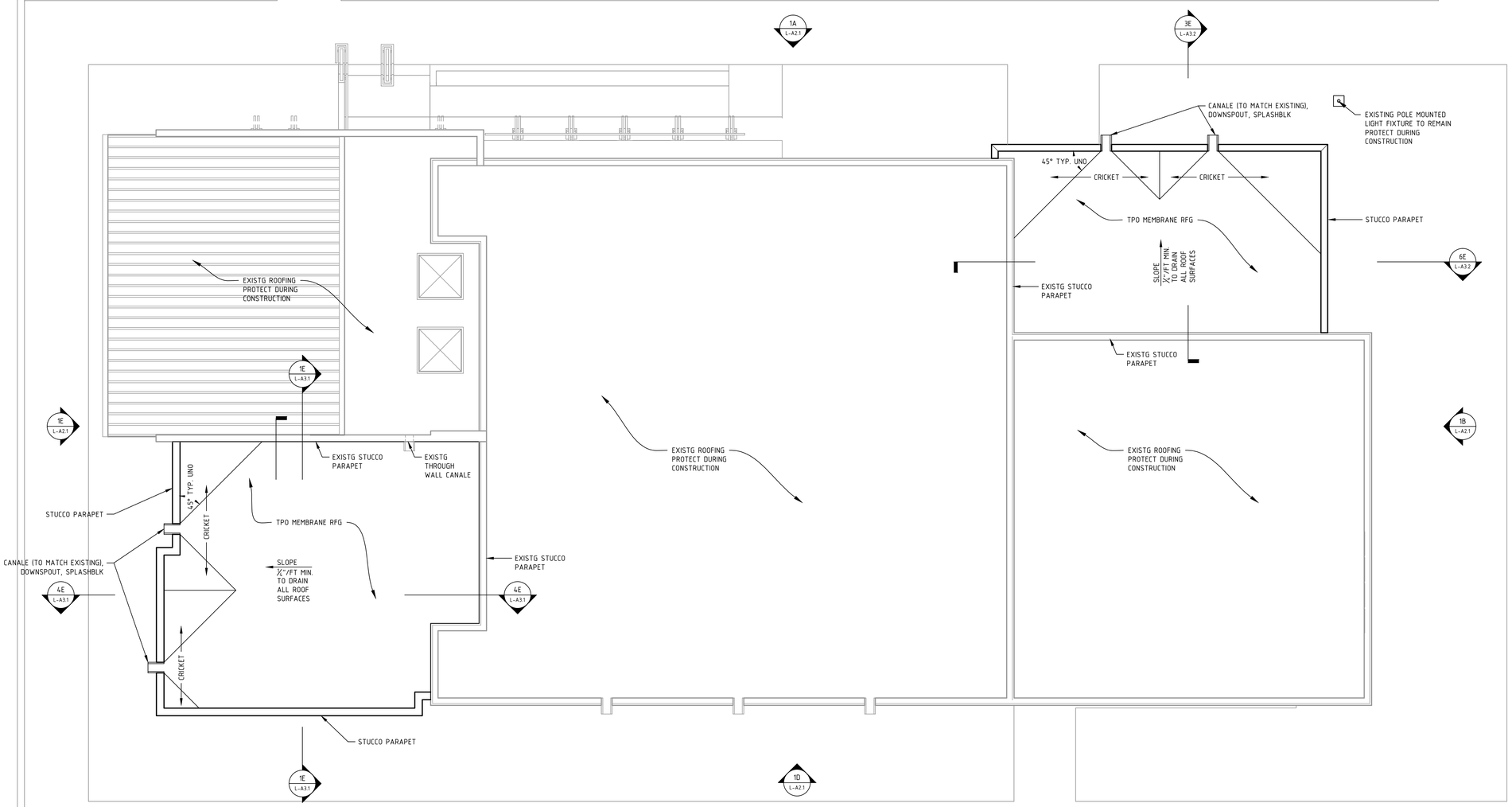

ROOF GENERAL NOTES

1. AT ROOFTOP HVAC ROOF CUT AND PATCH ROOF WITH MATERIALS TO MATCH EXISTING IN A MANNER THAT WILL MAINTAIN THE OWNERS EXISTING ROOF WARRANTY.
2. SEE MECHANICAL ELECTRICAL AND PLUMBING DRAWINGS FOR OTHER ROOFTOP WORK.
3. WHERE ROOF SHEATHING IS OVERLAPPED TO CREATE DRAINAGE "CRICKETS" OR VALLEYS TO CANALS, TAPERBOARD OR EQUIVALENT SHALL BE USED TO TRANSITION BETWEEN THE TWO DECK LEVELS TO CREATE A UNIFORM SUBSTRATE PER CODE.
4. AT NEW WD CANALE PROVIDE GALV. MTL LINING TO EXTEND NOT LESS THAN 6" PAST THE INSIDE OF THE PARAPET AND NOT LESS THAN 6" FROM EACH SIDE OF THE CANALE OPENING. MAINTAIN 1/4"/FT SLOPE TO DRAIN PER CODE. CANALE SIZE AND SHAPE TO MATCH EXISTING CANALES AT THE BUILDING

2A ROOF PLAN
3/16"=1'-0"

STATE OF NEW MEXICO
Alexander C. Dzurec
NO. 003942
11/4/14
REGISTERED ARCHITECT

autotroph
architecture.planning.sustainable design consulting

No.	Description	Date

SENIOR CENTER IMPROVEMENTS

LUISA
SENIOR CENTER
1500 LUISA STREET
SANTA FE, NM 87504

VILLA CONSUELO
SENIOR CENTER
1200 CAMINO CONSUELO STREET
SANTA FE, NM 87504

PASATIEMPO
SENIOR CENTER
664 ALTA VISTA STREET
SANTA FE, NM 87504

LUISA SENIOR CENTER

ROOF PLAN

Project number 1310

Date 1 OCTOBER 2014

L-A1.3

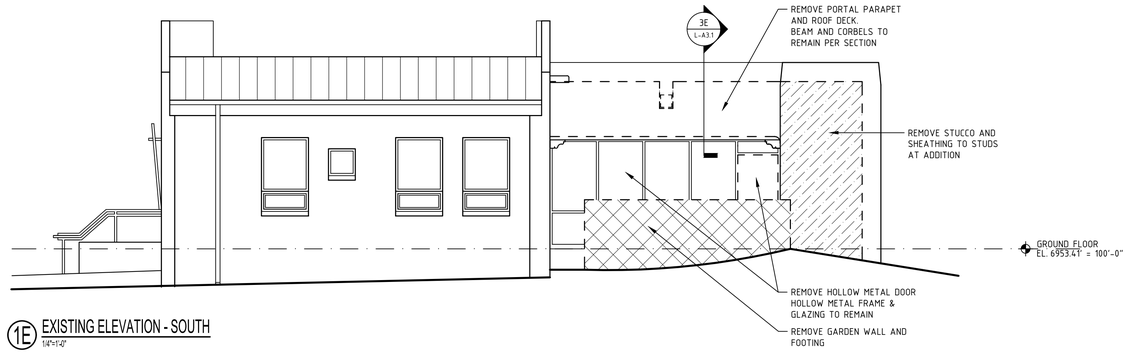

1E EXISTING ELEVATION - SOUTH
1/4"=1'-0"

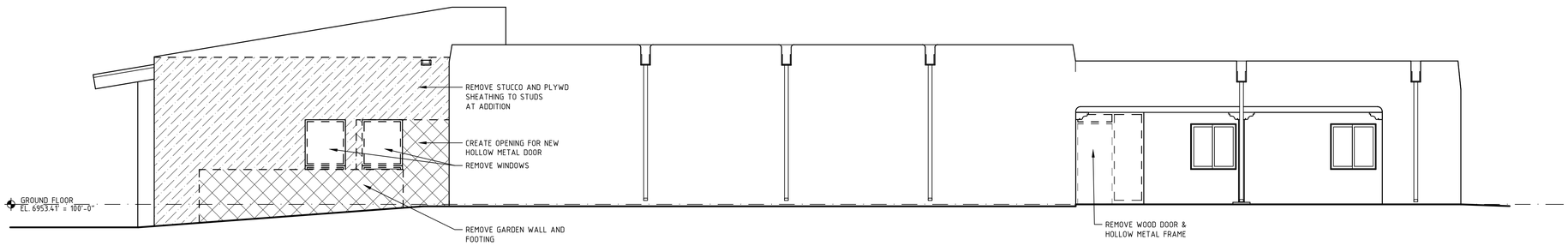

1D EXISTING ELEVATION - EAST
3/16"=1'-0"

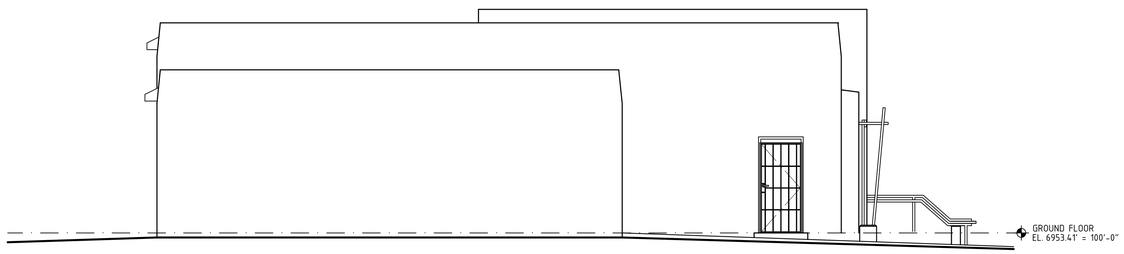

1B EXISTING ELEVATION - NORTH
3/16"=1'-0"

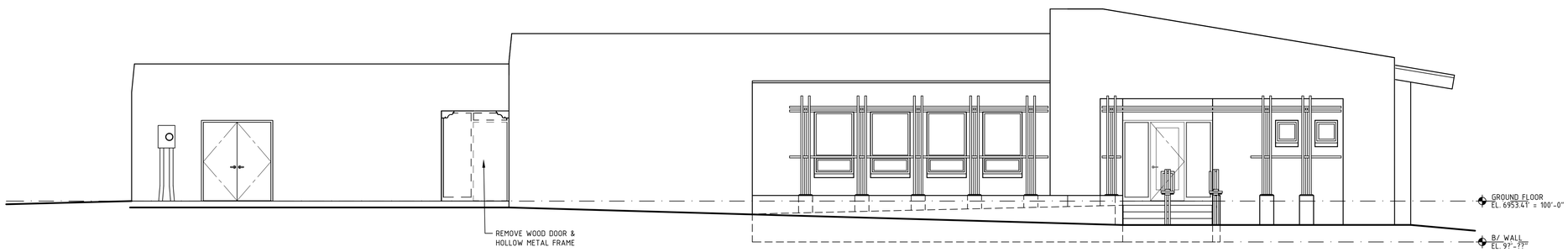

1A EXISTING ELEVATION - WEST
3/16"=1'-0"

STATE OF NEW MEXICO
Alexander C. Dzurec
NO. 003942
11/4/14
REGISTERED ARCHITECT

autotroph
architecture.planning.sustainable design consulting

No.	Description	Date

SENIOR CENTER IMPROVEMENTS

LUISA	VILLA CONSUELO	PASATIEMPO
SENIOR CENTER	SENIOR CENTER	SENIOR CENTER
1500 LUISA STREET	1200 CAMINO CONSUELO STREET	664 ALTA VISTA STREET
SANTA FE, NM 87504	SANTA FE, NM 87504	SANTA FE, NM 87504

LUISA SENIOR CENTER

EXISTING ELEVATIONS

Project number 1310

Date 1 OCTOBER 2014

L-A2.0

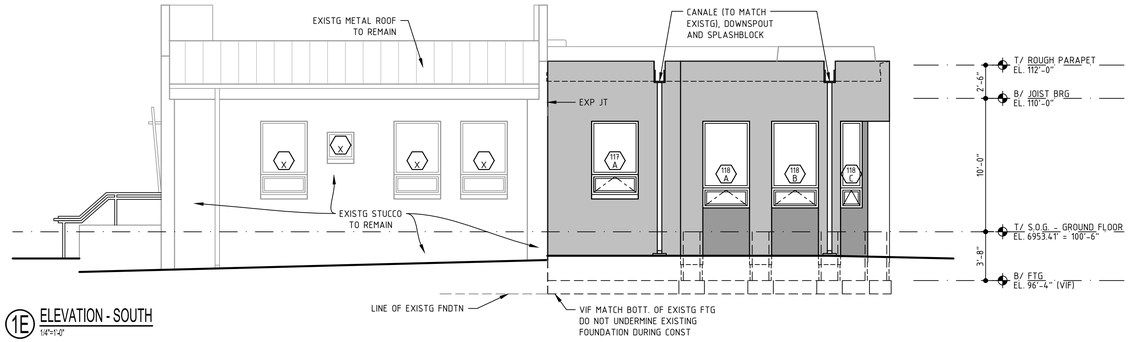

1E ELEVATION - SOUTH
1/4"=1'-0"

STUCCO LEGEND

- STUCCO - COLOR 1
- STUCCO - COLOR 1
- EXISTING STUCCO TO REMAIN

EXTERIOR PAINTING NOTES

1. EXTERIOR SIDE OF ALL HOLLOW METAL DOORS, DOOR FRAMES, COLOR X1 - GLOSS FINISH
2. ALL EXPOSED PORTAL WOOD JOISTS AND DECK OPAQUE STAIN COLOR S2
3. CLEAN DIRT, GRIME AND CHALKING FROM ALL EXISTING METAL SURFACES PRIOR TO PAINTING.
4. REMOVE RUST TO BARE METAL WITH POWER OR HAND TOOLS.
5. REMOVE LOOSE AND PEELING PAINT TO SOUND SUBSTRATE AND SAND SURFACES SMOOTH.
6. SPOT PRIME BARE METAL SURFACE PRIOR TO APPLYING FINISH COATS.
7. DULL GLOSSY SURFACES OF OLD PAINT FILMS BY SANDING BEFORE WASHING AND REPAINTING.
8. CONFIRM COMPATIBILITY OF FINISH COATS OVER PREVIOUSLY PAINTED SURFACES. PROVIDE BARRIER COATS WHERE REQUIRED FOR PROPER ADHESION.

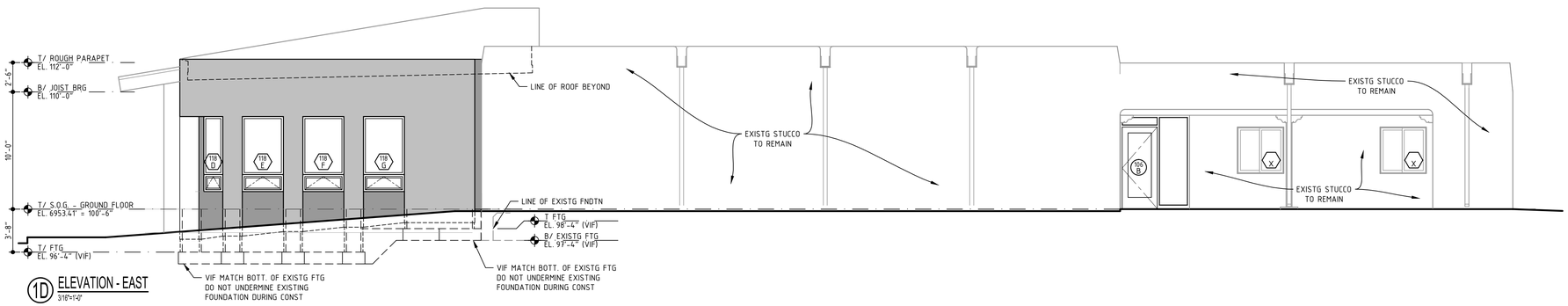

1D ELEVATION - EAST
3/16"=1'-0"

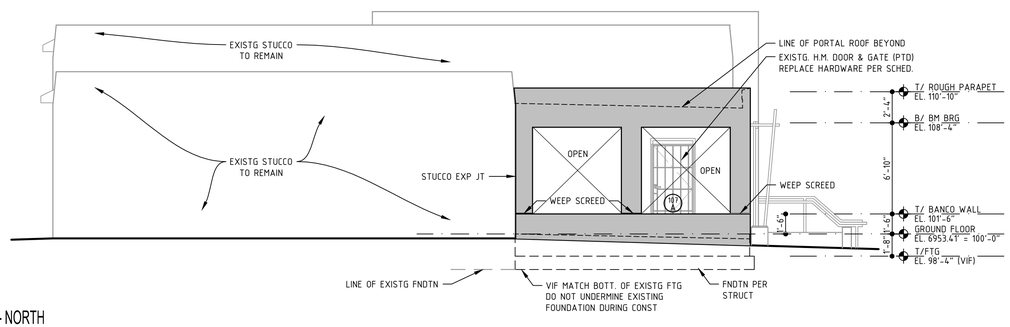

1B ELEVATION - NORTH
3/16"=1'-0"

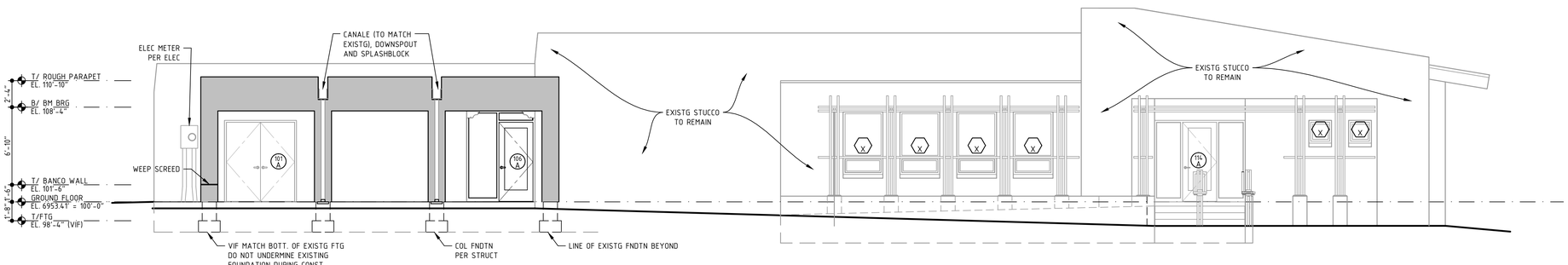

1A ELEVATION - WEST
3/16"=1'-0"

STATE OF NEW MEXICO
Alexander C. Dzurec
NO. 003942
11/4/14
REGISTERED ARCHITECT

autotroph
architecture.planning.sustainable design consulting

No.	Description	Date

SENIOR CENTER IMPROVEMENTS

LUISA	VILLA CONSUELO	PASATIEMPO
SENIOR CENTER	SENIOR CENTER	SENIOR CENTER
1500 LUISA STREET	1200 CAMINO CONSUELO STREET	664 ALTA VISTA STREET
SANTA FE, NM 87504	SANTA FE, NM 87504	SANTA FE, NM 87504

LUISA SENIOR CENTER

ELEVATIONS

Project number 1310

Date 1 OCTOBER 2014

L-A2.1

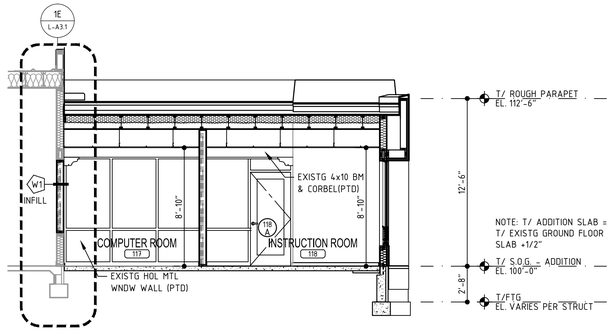

1E SECTION - ADDITION
3/16"=1'-0"

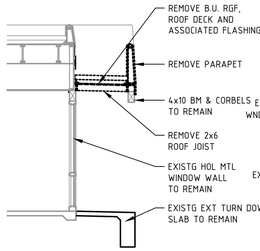

3E SECTION - EXISTING PORTAL REMOVALS
3/16"=1'-0"

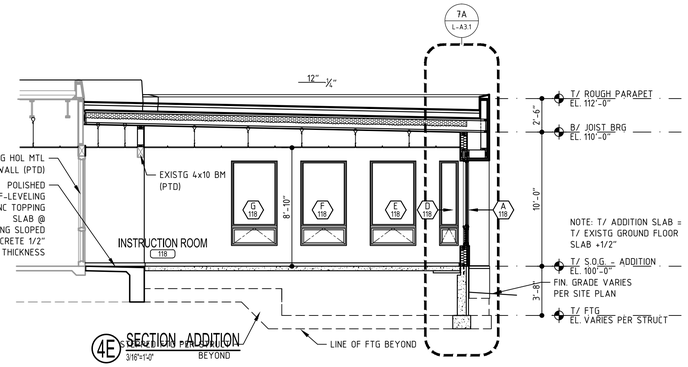

4E SECTION - ADDITION
3/16"=1'-0"

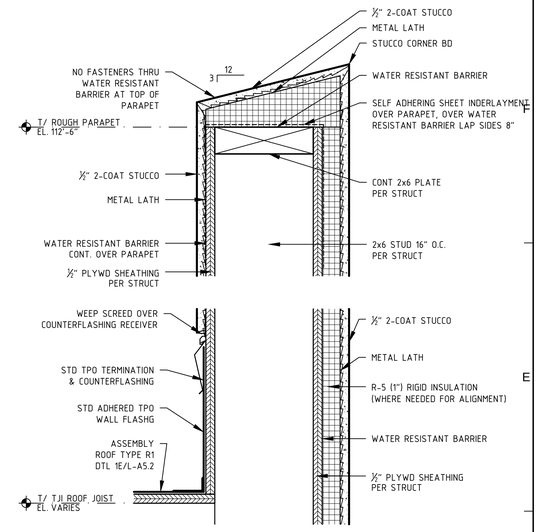

6D SECTION DETAIL - PARAPET
3"=1'-0"

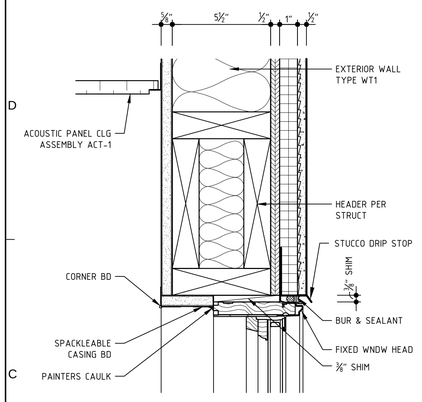

1C SECTION DETAIL - WINDOW HEAD
3"=1'-0"

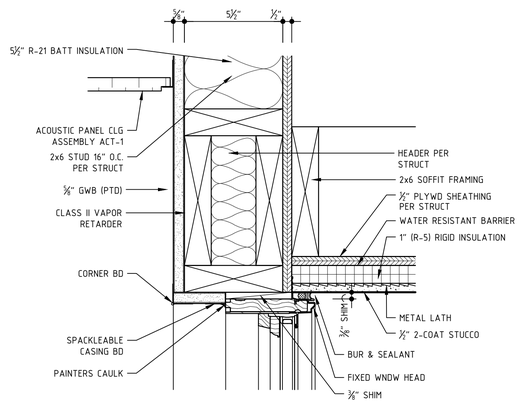

3C SECTION DETAIL - WINDOW HEAD
3"=1'-0"

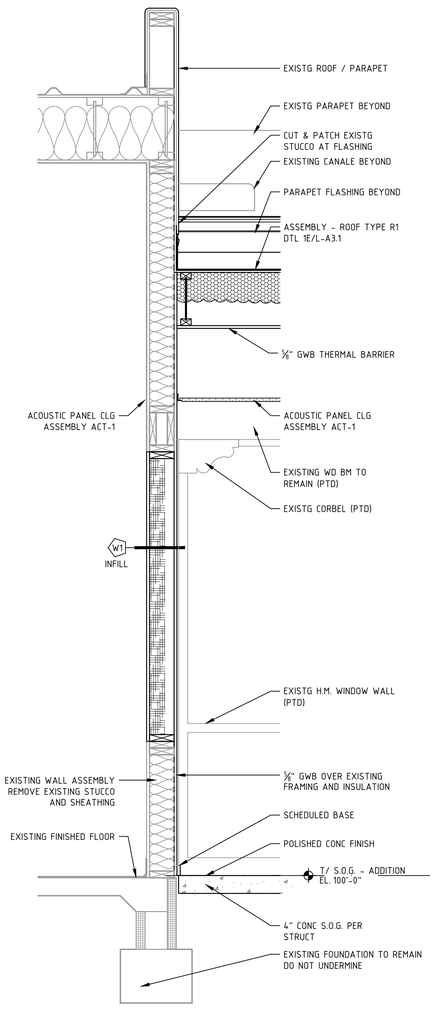

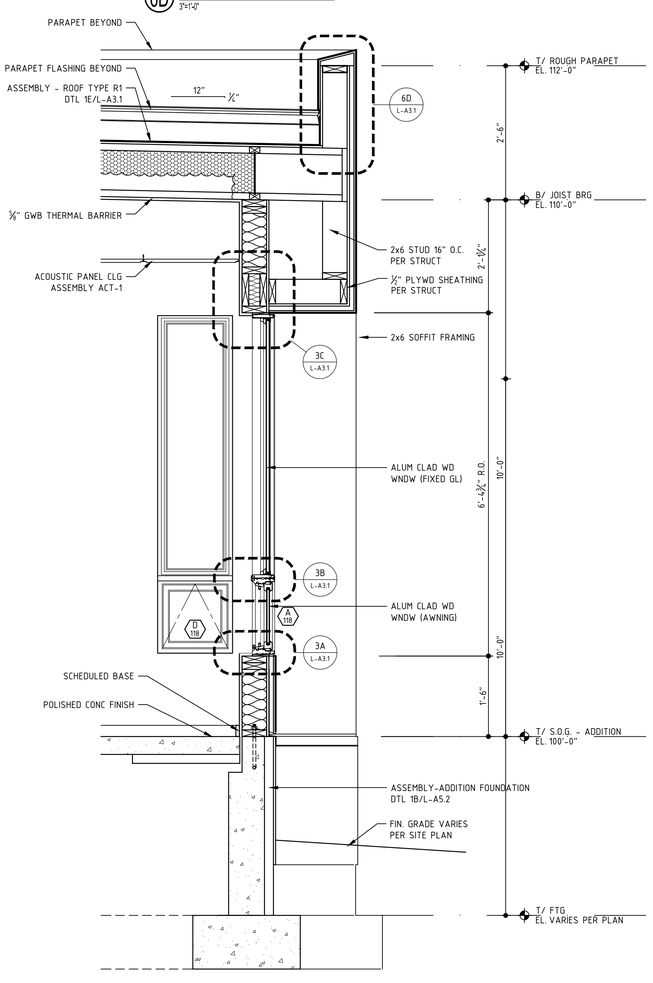

7A WALL SECTION - SOUTH WALL
3/4"=1'-0"

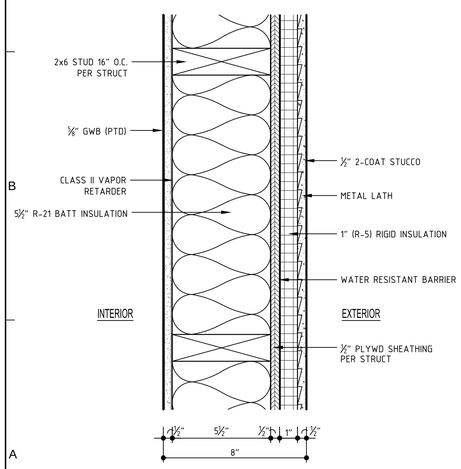

EXTERIOR WALL TYPE WT1
EXTERIOR 2x6 STUD WALL
NO RATING

1A ASSEMBLY - EXTERIOR WALL
3"=1'-0"

NOTE: FLASH ALL WINDOW OPENINGS W/ SELF ADHERING FLASHING PER WINDOW MANUFACTURES WRITTEN INSTRUCTIONS FOR WINDOWS WITH A NAILING FLANGE

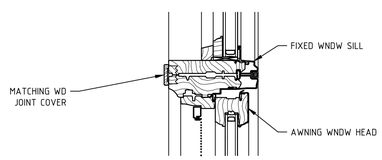

3B SECTION DETAIL - WINDOW JOINING
3"=1'-0"

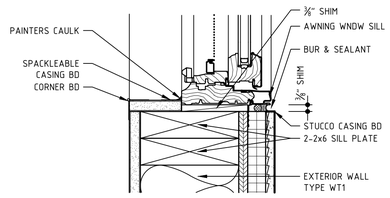

3A SECTION DETAIL - WINDOW SILL
3"=1'-0"

4A WALL SECTION - EXISTING WALL
3/4"=1'-0"

STATE OF NEW MEXICO
Alexander C. Dzurec
NO. 003942
11/4/14
REGISTERED ARCHITECT

autotroph
architecture.planning.sustainable design consulting

No.	Description	Date

SENIOR CENTER IMPROVEMENTS

LUISA
SENIOR CENTER
1500 LUISA STREET
SANTA FE, NM 87504

VILLA CONSUELO
SENIOR CENTER
1200 CAMINO CONSUELO STREET
SANTA FE, NM 87504

PASATIEMPO
SENIOR CENTER
664 ALTA VISTA STREET
SANTA FE, NM 87504

LUISA SENIOR CENTER

SECTIONS - ADDITION

Project number	1310
Date	1 OCTOBER 2014

L-A3.1

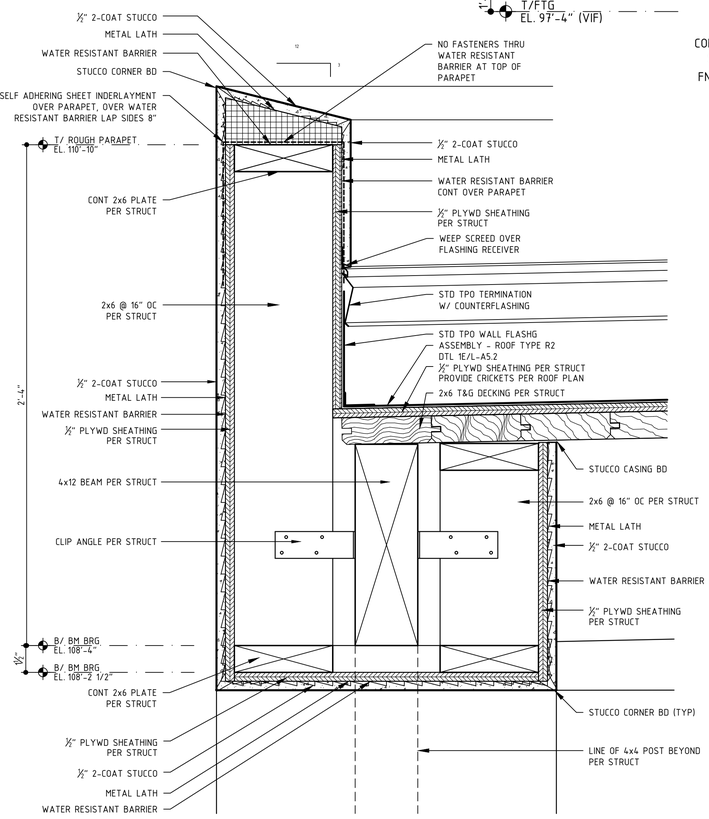

1B SECTION DETAIL - BEAM SOFFIT
3"=1'-0"

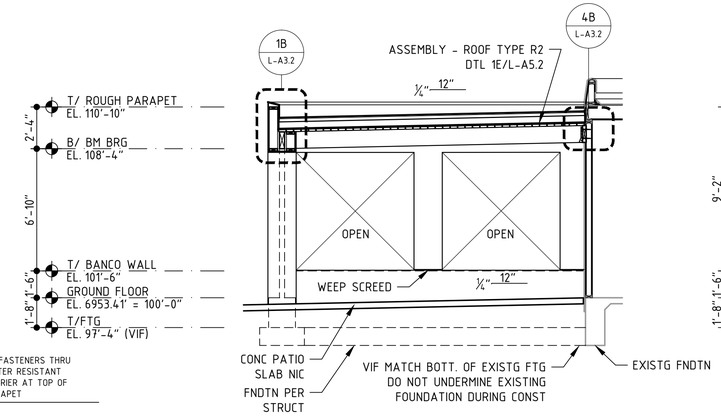

4E SECTION - PORTAL
3/16"=1'-0"

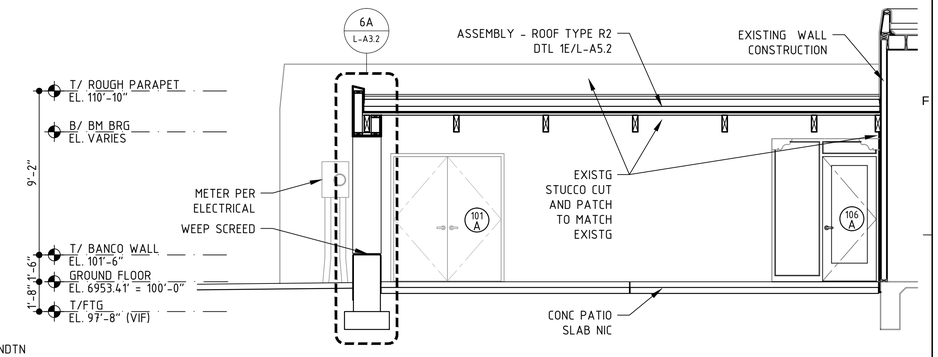

6E SECTION - PORTAL
3/16"=1'-0"

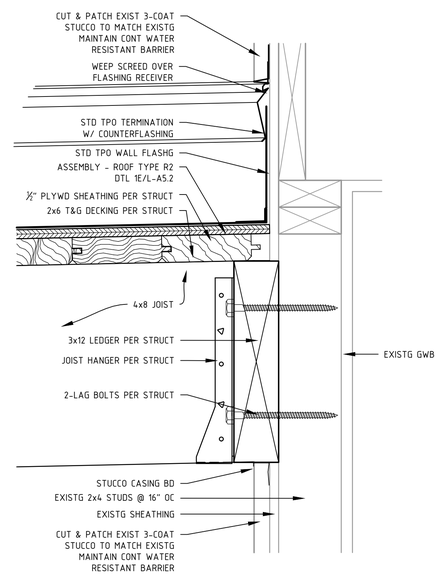

4B SECTION DETAIL - ROOF @ EXISTING WALL
3"=1'-0"

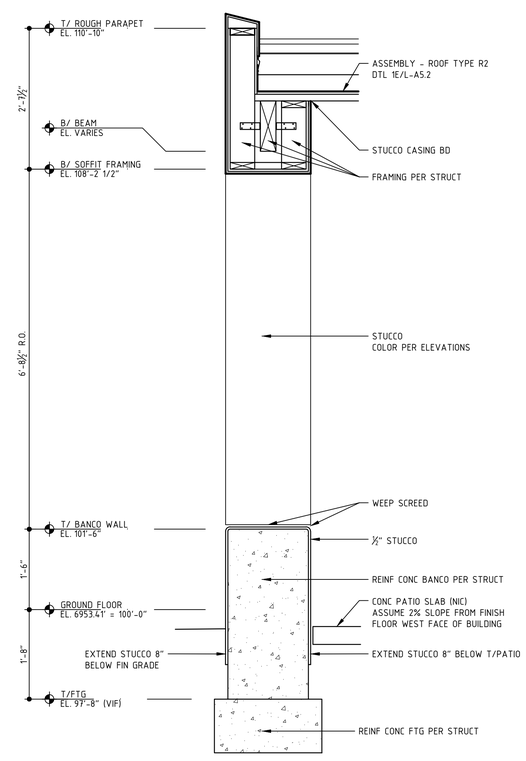

6A WALL SECTION - PORTAL
3/4"=1'-0"

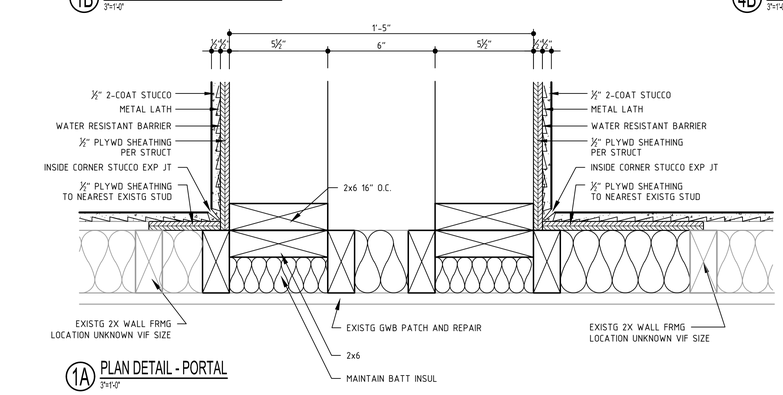

1A PLAN DETAIL - PORTAL
3"=1'-0"

STATE OF NEW MEXICO
Alexander C. Dzurec
NO. 003942
11/4/14
REGISTERED ARCHITECT

autotroph
architecture.planning.sustainable design consulting

No.	Description	Date

SENIOR CENTER IMPROVEMENTS

LUISA
SENIOR CENTER
1500 LUISA STREET
SANTA FE, NM 87504

VILLA CONSUELO
SENIOR CENTER
1200 CAMINO CONSUELO STREET
SANTA FE, NM 87504

PASATIEMPO
SENIOR CENTER
664 ALTA VISTA STREET
SANTA FE, NM 87504

LUISA SENIOR CENTER

SECTIONS - PORTAL

Project number 1310

Date 1 OCTOBER 2014

L-A3.2

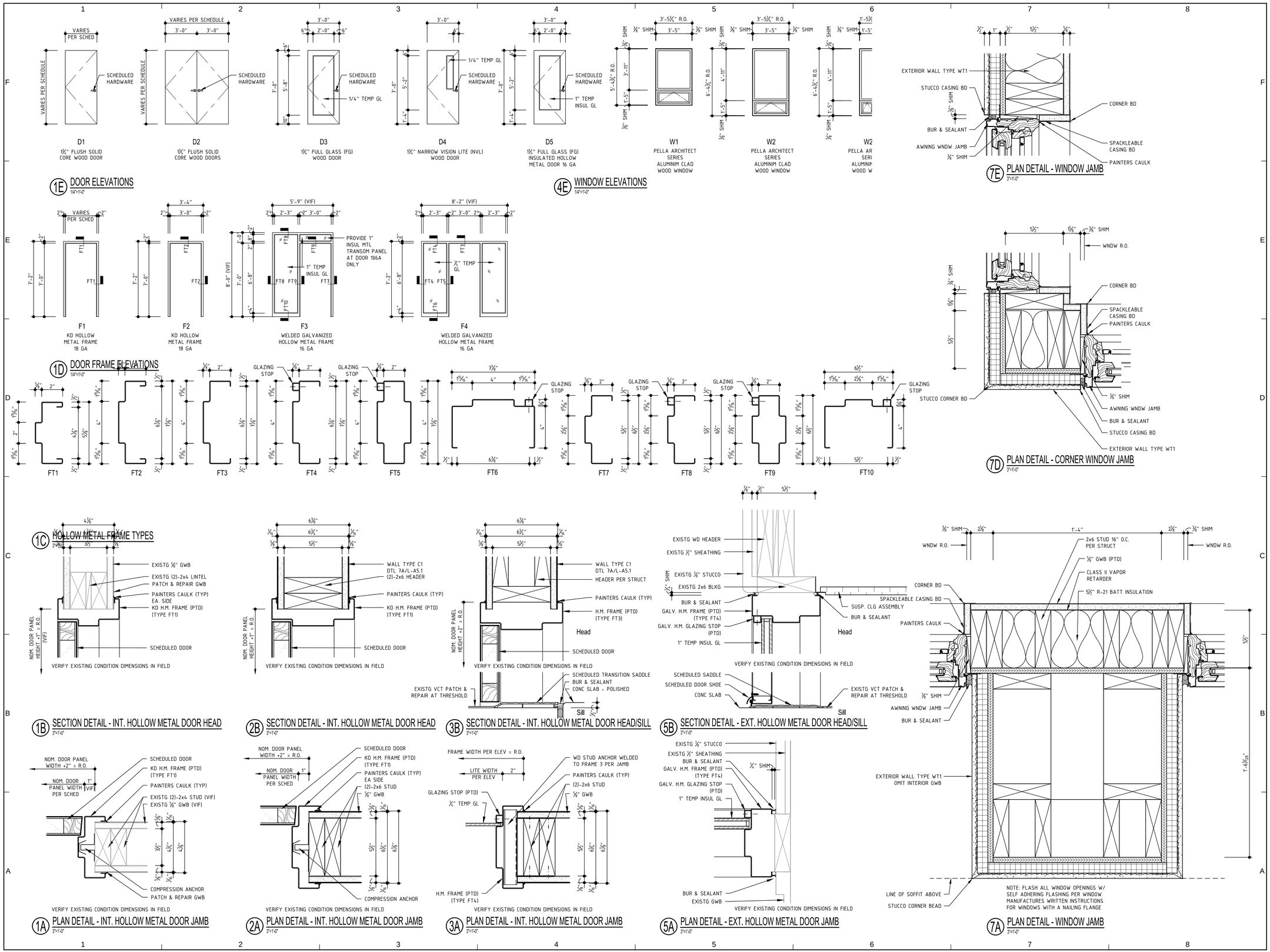

STATE OF NEW MEXICO
Alexander C. Dzurec
NO. 003942
11/4/14
REGISTERED ARCHITECT

autotroph
architecture.planning.sustainable design consulting

No.	Description	Date

SENIOR CENTER IMPROVEMENTS

LUISA	VILLA CONSUELO	PASATIEMPO
SENIOR CENTER	SENIOR CENTER	SENIOR CENTER
1500 LUISA STREET	1200 CAMINO CONSUELO STREET	664 ALTA VISTA STREET
SANTA FE, NM 87504	SANTA FE, NM 87504	SANTA FE, NM 87504

LUISA SENIOR CENTER

DOOR DETAILS
WINDOW DETAILS

Project number 1310
Date 1 OCTOBER 2014

L-A5.1

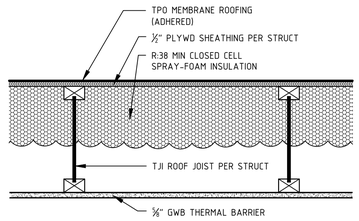

ROOF TYPE R1
ADDITION FLAT ROOF
NO RATING

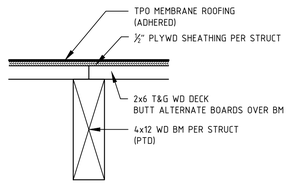

ROOF TYPE R2
PORTAL FLAT ROOF
NO RATING

1E ASSEMBLY - FLAT ROOF TYPES
1 1/2"=1'-0"

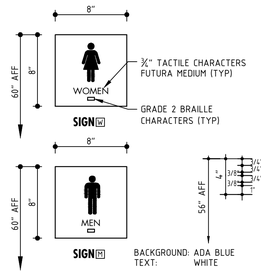

3E RESTROOM SIGNS
1 1/2"=1'-0"

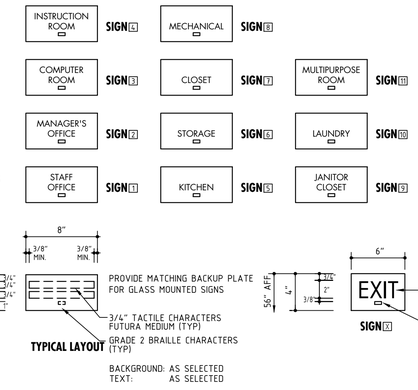

4E ROOM IDENTIFICATION SIGNS
1 1/2"=1'-0"

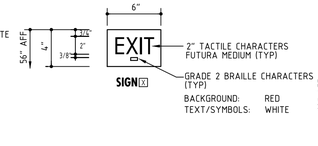

5E EXIT SIGN
1 1/2"=1'-0"

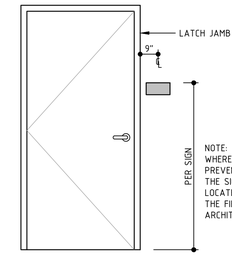

6F SIGN LOCATION DIAGRAM
NTS

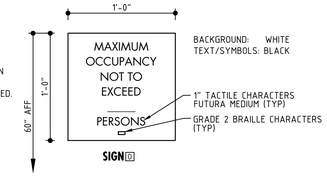

7F ASSEMBLY SIGN
1 1/2"=1'-0"

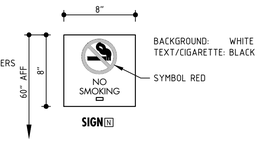

6E NO SMOKING SIGN
1 1/2"=1'-0"

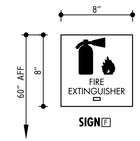

7E FIRE EXTINGUISHER SIGN
1 1/2"=1'-0"

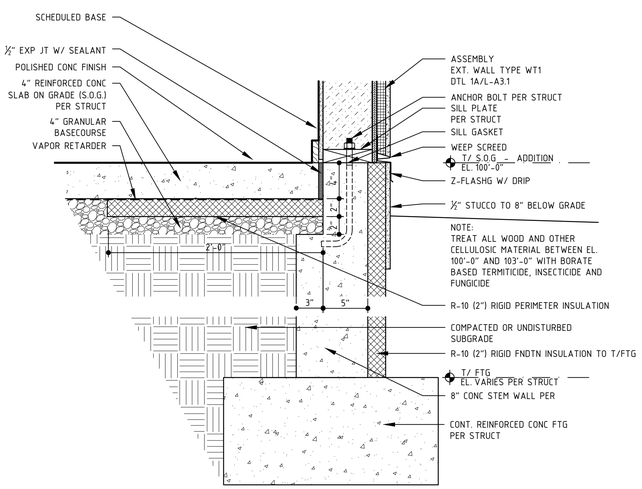

1B ASSEMBLY - ADDITION FOUNDATION
1 1/2"=1'-0"

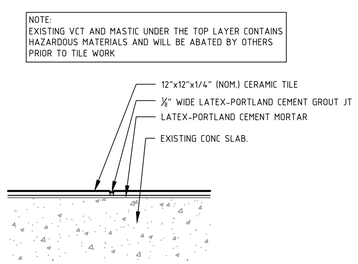

3B ASSEMBLY - CERAMIC TILE @ EXISTING CONCRETE FLOOR
3"=1'-0"
TCA ASSEMBLY: F113

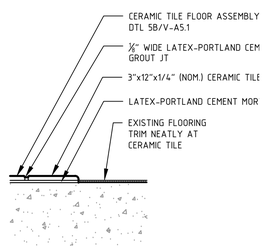

5B ASSEMBLY - CERAMIC TILE TRANSITION
3"=1'-0"

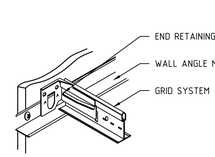

SEISMIC PERFORMANCE: PROVIDE ACOUSTICAL CEILING SYSTEM THAT HAS BEEN EVALUATED BY AN INDEPENDENT PARTY AND FOUND TO BE COMPLIANT WITH THE 2009 INTERNATIONAL BUILDING CODE, SEISMIC CATEGORY D.

6C AXO - SUSPENDED CEILING GRID
NTS

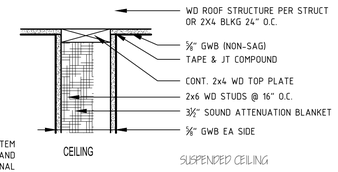

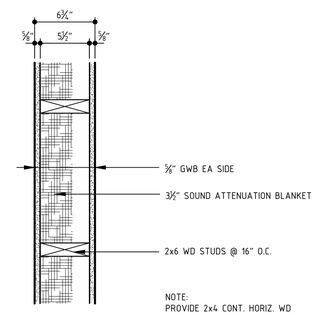

NOTE:
PROVIDE 2x4 CONT. HORIZ. WD BLK'G @ PARTITION MID. HT. TYP.

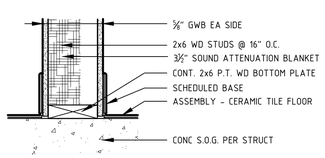

INTERIOR WALL TYPE W1 (W1)
NON-BEARING
NO RATING

7A INTERIOR WALL TYPE
1 1/2"=1'-0"

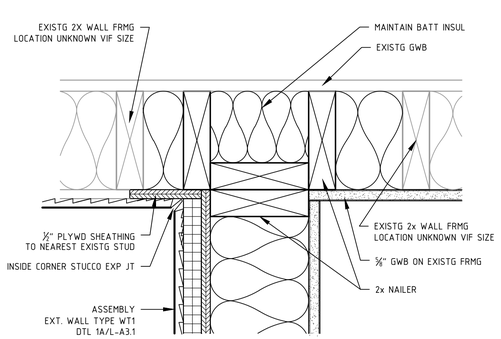

1A PLAN DETAIL - WALL INTERSECTION
3"=1'-0"

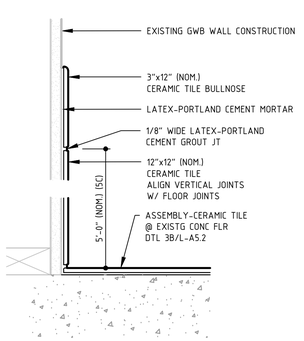

3A ASSEMBLY - CERAMIC TILE WAINSCOT
3"=1'-0"
TCA ASSEMBLY: W243

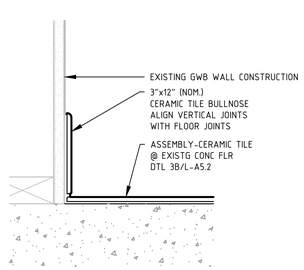

5A ASSEMBLY - CERAMIC TILE BASE
3"=1'-0"

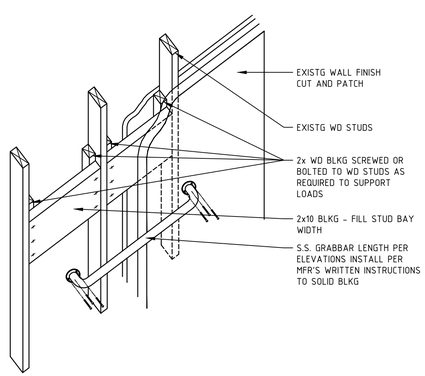

6A AXO - GRABBAR MOUNTING
NTS

STATE OF NEW MEXICO
Alexander C. Dzurac
NO. 003942
11/4/14
REGISTERED ARCHITECT

autotroph
architecture.planning.sustainable design consulting

No.	Description	Date

SENIOR CENTER IMPROVEMENTS

LUISA	VILLA CONSUELO	PASATIEMPO
SENIOR CENTER	SENIOR CENTER	SENIOR CENTER
1500 LUISA STREET	1200 CAMINO CONSUELO STREET	664 ALTA VISTA STREET
SANTA FE, NM 87504	SANTA FE, NM 87504	SANTA FE, NM 87504

LUISA SENIOR CENTER

DETAILS

Project number 1310
Date 1 OCTOBER 2014

L-A5.2

GENERAL STRUCTURAL NOTES

CODES AND MANUALS:

IBC-09 INTERNATIONAL BUILDING CODE 2009
ASCE/SEI 7-05 MINIMUM DESIGN LOADS FOR BUILDINGS AND OTHER STRUCTURES
ACI 318-08 BUILDING CODE REQUIREMENTS FOR STRUCTURAL CONCRETE
NDS-05 NATIONAL DESIGN SPECIFICATION FOR WOOD CONSTRUCTION WITH 2005 SUPPLEMENT

DESIGN CRITERIA:

VERTICAL:

ROOF LIVE LOAD: LR = 20*R1*R2	20 PSF
REDUCTION FACTOR BASED ON TRIB AREA	R1 = 1.0
REDUCTION FACTOR BASED ON ROOF SLOPE	R2 =1.0
SNOW LOAD	
GROUND SNOW LOAD	PG=25 PSF
FLAT ROOF SNOW LOAD	PF=25 PSF
SNOW EXPOSURE FACTOR	CE=1.0
SNOW LOAD IMPORTANCE FACTOR	IS=1.0
THERMAL FACTOR	CT=1.0

HORIZONTAL:

WIND	
BASIC WIND SPEED	90 MPH
WIND IMPORTANCE FACTOR	IW = 1.0
BUILDING CATEGORY	II
EXPOSURE	C
SEISMIC	
SEISMIC IMPORTANCE FACTOR	IS = 1.0
MAPPED SPECTRAL RESPONSE ACCELERATIONS	
SHORT PERIOD	SS=0.000G
1 SECOND PERIOD	S1=0.000G
SITE CLASS	D
SPECTRAL RESPONSE COEFFICIENTS	
SHORT PERIOD	SDS=0.000G
1 SECOND PERIOD	SD1=0.000G
SEISMIC DESIGN CATEGORY	D
BASIC SEISMIC FORCE RESISTING SYSTEM:	
BEARING WALL SYSTEM - LIGHT FRAMED WALLS WITH PLYWOOD SHEATHING	
SEISMIC RESPONSE COEFFICIENT	CS=0.000
RESPONSE MODIFICATION FACTOR	R = 6.5
DESIGN BASE SHEAR	V = 0.000W
ANALYSIS PROCEDURE: SIMPLIFIED	

ALLOWABLE SOIL BEARING PRESSURE = 1500 PSF.

FUTURE BUILDING EXPANSION: NONE

GENERAL:

THE CONTRACTOR SHALL VERIFY ALL DIMENSIONS IN THE FIELD.

SHOP DRAWINGS SHALL BE FURNISHED AND REVIEWED BEFORE ANY FABRICATION OR ERECTION IS STARTED. THE CONTRACTOR SHALL REVIEW AND APPROVE SHOP DRAWINGS PRIOR TO SUBMITTAL TO THE ARCHITECT FOR REVIEW. POORLY EXECUTED SHOP DRAWINGS WILL BE REJECTED AND SHALL BE RESUBMITTED.

THE CONTRACTOR SHALL BE RESPONSIBLE FOR PROVIDING SAFE AND ADEQUATE SHORING FOR ALL PARTS OF THE STRUCTURE DURING CONSTRUCTION.

NOTCHING OR CUTTING ANY STRUCTURAL MEMBER IN THE FIELD IS PROHIBITED.

THE CONTRACTOR SHALL BE RESPONSIBLE FOR ADHERING TO ALL APPLICABLE STANDARDS SET FORTH BY OSHA.

DO NOT SCALE DRAWINGS.

CAST-IN-PLACE CONCRETE:

ALL CONCRETE SHALL CONFORM TO THE SPECIFICATIONS FOR STRUCTURAL CONCRETE, ACI 301-05. SEE SPECIFICATIONS FOR ADDITIONAL REQUIREMENTS FOR CONCRETE SLABS TO BE POLISHED

NORMALWEIGHT CONCRETE:

A. F'C = 4500 PSI @ 28 DAYS - ALL EXPOSED EXTERIOR CONCRETE FLAT WORK AND RETAINING WALLS (I.E., SLABS, EQUIPMENT PADS, WALLS, ETC.).

EXTERIOR CONCRETE SHALL MEET EXPOSURE CATEGORY AND CLASS F1 ACCORDING TO ACI 318 TABLE 4.2.1.

B. F'C = 3000 PSI @ 28 DAYS - ALL INTERIOR CONCRETE (I.E. FOOTINGS, STEM WALLS, ETC.).

C. F'C = 3000 PSI @ 28 DAYS - ALL INTERIOR SLABS ON GRADE.

CONCRETE MIX DESIGNS (INCLUDING AIR CONTENT, WATER TO CEMENT RATIOS, AND OTHER CRITERIA) SHALL CONFORM TO THE REQUIREMENTS SET FORTH IN ACI 318 TABLE 4.3.1, BASED ON THE EXPOSURE CATEGORIES AND CLASSES DEFINED IN ACI 318 TABLE 4.2.1. USE AIR ENTRAINING ADMIXTURE IN ALL EXTERIOR CONCRETE. AIR CONTENT IN FIRE RATED SLABS SHALL ALSO COMPLY WITH THE REQUIREMENTS IN THE SPECIFIED UL LISTING.

ALL CONCRETE EXPOSED TO GROUND SHALL BE MANUFACTURED WITH PORTLAND CEMENT TYPE II.

REINFORCING STEEL:

ALL REINFORCING STEEL SHALL BE FABRICATED AND PLACED IN ACCORDANCE WITH THE BUILDING CODE REQUIREMENTS FOR STRUCTURAL CONCRETE (ACI 318-08), AND DETAILS AND DETAILING OF CONCRETE REINFORCEMENT (ACI 315-99).

ALL REINFORCING STEEL SHALL CONFORM TO ASTM A615 GRADE 60; EXCEPT STIRRUPS, TIES AND INDICATED FIELD-BENT BARS, WHICH SHALL CONFORM TO ASTM A615 GRADE 40.

TENSION AND COMPRESSION LAPS IN REINFORCING SHALL BE IN ACCORDANCE WITH ACI 318, CHAPTER 12. THE MINIMUM LAP SHALL BE MADE AS FOLLOWS UNLESS NOTED OTHERWISE ON THE DRAWINGS:

CONTINUOUS CONCRETE FOOTINGS AND STEMWALLS	
ALL BARS	30 BAR DIAMETERS (18" MINIMUM)
SLABS-ON-GRADE	
ALL BARS	30 BAR DIAMETERS (18" MINIMUM)

ALL HORIZONTAL REINFORCING IN FOOTINGS, WALLS AND BEAMS SHALL BE CONTINUOUS AROUND CORNERS OR HAVE BENT (CORNER) BARS OF THE SAME SIZE AND SPACING AS THE HORIZONTAL BARS AND LAP 30 BAR DIAMETERS (24" MINIMUM).

CONCRETE COVER FOR REINFORCING SHALL BE AS FOLLOWS UNLESS OTHERWISE NOTED:

A. CONCRETE CAST AGAINST AND PERMANENTLY EXPOSED TO EARTH: 3"
B. CONCRETE CAST AGAINST FORMS BUT EXPOSED TO EARTH OR WEATHER:
BARS LARGER THAN NO. 5: 2"
BARS NO. 5 OR SMALLER: 1 1/2"
D. SLAB ON GRADE: 1 1/2" FROM TOP OF SLAB

FORM TIES SHALL BE EITHER OF THE THREADED OR SNAP-OFF TYPE SO THAT NO METAL WILL BE LEFT WITHIN 1 INCH OF THE SURFACE OF THE WALL. FOLLOWING REMOVAL OF FORM TIES, RECESSES ARE TO BE CAREFULLY FILLED AND POINTED WITH MORTAR.

REINFORCING SHALL NOT BE TACK WELDED OR WELDED IN ANY MANNER UNLESS SPECIFICALLY DETAILED ON THE STRUCTURAL PLANS.

BAR SUPPORTS AND SPACERS FOR REINFORCING SHALL BE PROVIDED IN ACCORDANCE WITH ACI 315-99. REINFORCING SHALL BE SECURELY TIED TO SUPPORTS.

CHAIRS WITH 22 GAGE SAND PLATES OR PRECAST BLOCKS SHALL BE PROVIDED FOR ALL REINFORCING OF CONCRETE IN CONTACT WITH GRADE.

POST INSTALLED ANCHORS:

ALL POST INSTALLED MECHANICAL ANCHORS INTO CONCRETE SHALL BE HILTI KWIK BOLT TZ EXPANSION ANCHOR, SIMPSON STRONG BOLT WEDGE ANCHOR, ITW RED HEAD TRUBOLT + WEDGE ANCHOR, OR APPROVED EQUAL. INSTALLATION SHALL BE PER MANUFACTURER'S RECOMMENDATIONS.

ANCHOR LENGTHS SHOWN FOR ATTACHMENT TO CONCRETE AND/OR MASONRY ARE REQUIRED EMBEDMENT LENGTHS. THE CONTRACTOR SHALL PROVIDE ANCHORS WITH ADDITIONAL LENGTH TO FACILITATE THE REQUIRED CONNECTION.

SUBMIT ALL PROPOSED ANCHORING SYSTEMS INCLUDING ICC-ES REPORTS TO STRUCTURAL ENGINEER FOR REVIEW PRIOR TO INSTALLATION.

WOOD FRAMING:

ALL SAWN LUMBER (2"-4" THICK, 2" & WIDER) EXCEPT STUDS SHALL BE HEM FIR, NO. 2 OR BETTER, WITH THE FOLLOWING ALLOWABLE STRESSES:

MAXIMUM FIBER STRESS IN BENDING:	FB= 850 PSI
TENSION PARALLEL TO GRAIN:	FT= 525 PSI
COMPRESSION PARALLEL TO GRAIN:	FC= 1300 PSI
COMPRESSION PERPENDICULAR TO GRAIN:	FC= 405 PSI
HORIZONTAL SHEAR:	FV= 150 PSI
MODULUS OF ELASTICITY:	E= 1,300,000 PSI

ALL SAWN LUMBER (5"x5" OR LARGER BEAMS AND STRINGERS) SHALL BE HEM FIR, NO. 2 OR BETTER, WITH THE FOLLOWING ALLOWABLE STRESSES:

MAXIMUM FIBER STRESS IN BENDING:	FB= 675 PSI
TENSION PARALLEL TO GRAIN:	FT= 350 PSI
COMPRESSION PERPENDICULAR TO GRAIN:	FC= 405 PSI
HORIZONTAL SHEAR:	FV= 140 PSI
MODULUS OF ELASTICITY:	E= 1,100,000 PSI

ALL SAWN LUMBER (5"x5" OR LARGER POSTS AND TIMBERS) SHALL BE HEM FIR, NO. 2 OR BETTER, WITH THE FOLLOWING ALLOWABLE STRESSES:

MAXIMUM FIBER STRESS IN BENDING:	FB= 575 PSI
TENSION PARALLEL TO GRAIN:	FT= 375 PSI
COMPRESSION PARALLEL TO GRAIN:	FC= 575 PSI
COMPRESSION PERPENDICULAR TO GRAIN:	FC= 405 PSI
HORIZONTAL SHEAR:	FV= 140 PSI
MODULUS OF ELASTICITY:	E= 1,100,000 PSI

STUDS (2"-4" THICK, 2" & WIDER) SHALL BE SPRUCE-PINE-FIR, NO. 2 OR BETTER, WITH THE FOLLOWING ALLOWABLE STRESSES:

MAXIMUM FIBER STRESS IN BENDING	FB= 875 PSI
TENSION PARALLEL TO GRAIN:	FT= 450 PSI
COMPRESSION PARALLEL TO GRAIN:	FC= 1150 PSI
COMPRESSION PERPENDICULAR TO GRAIN:	FC= 425 PSI
HORIZONTAL SHEAR:	FV= 135 PSI
MODULUS OF ELASTICITY:	E= 1,400,000 PSI

PREFABRICATED WOOD JOISTS:

THE JOISTS SHALL BE MANUFACTURED TO FIT THE DIMENSIONS AND CHECKED FOR THE EFFECTS OF CONCENTRATED LOADS INDICATED ON THE PLANS. THE DESIGN STRESS VALUE SHALL BE IN COMPLIANCE WITH THE NATIONAL DESIGN SPECIFICATION FOR WOOD CONSTRUCTION.

APA SPAN RATED SHEATHING:

SEE PLANS FOR GRADE, THICKNESS, AND LOCATIONS OF SHEATHING.

ROOF AND WALL SHEATHING SHALL BE CONTINUOUS OVER 2 SPANS MINIMUM. ENDS OF PANELS SHALL OCCUR DIRECTLY OVER SUPPORTS.

CONNECTIONS:

NAILING SHALL BE IN ACCORDANCE WITH THE IBC 2009 NAILING SCHEDULE UNLESS OTHERWISE NOTED. COMMON OR BOX NAILS MAY BE USED EXCEPT WHERE OTHERWISE NOTED.

JOIST HANGERS SHALL BE BY SIMPSON CO. OR EQUAL WITH CONNECTIONS INSTALLED ACCORDING TO MANUFACTURER'S RECOMMENDATIONS.

BOLTS SHALL BE ASTM A307.

STEEL SIDE PLATES SHALL BE ASTM A36.

FOUNDATION NOTES

FIELD OBSERVATION AND TESTS:

THE OWNER SHALL EMPLOY THE SERVICES OF A REGISTERED, LICENSED GEOTECHNICAL ENGINEER TO OBSERVE ALL CONTROLLED EARTHWORK. THE GEOTECHNICAL ENGINEER SHALL PROVIDE CONTINUOUS ON-SITE OBSERVATION BY EXPERIENCED PERSONNEL DURING CONSTRUCTION OF CONTROLLED EARTHWORK. THE CONTRACTOR SHALL NOTIFY THE GEOTECHNICAL ENGINEER AT LEAST TWO WORKING DAYS IN ADVANCE OF ANY FIELD OPERATIONS OF THE CONTROLLED EARTHWORK:

TESTS OF MATERIALS SHALL BE MADE AT THE FOLLOWING RATES:

ONE FIELD DENSITY TEST PER EACH 500 SQUARE YARDS OF COMPACTED SUBGRADE PRIOR TO PLACING STRUCTURAL FILL OR FLOOR SLAB CONSTRUCTION WITH A MINIMUM OF 3 TESTS.

ONE FIELD DENSITY TEST PER EACH 300 CUBIC YARDS OF STRUCTURAL FILL PLACED OR EACH HORIZONTAL LAYER OF STRUCTURAL FILL, WHICHEVER IS GREATER.

ONE MOISTURE-DENSITY CURVE FOR EACH TYPE OF MATERIAL USED, AS INDICATED BY SIEVE ANALYSIS AND PLASTICITY INDEX.

THE GEOTECHNICAL ENGINEER SHALL SUBMIT THE RESULTS OF ALL REQUIRED TESTS.

CLEARING AND GRUBBING:

REMOVE ALL BRUSH, RUBBISH, GRASS, AND GRASS ROOTS FROM THE CONSTRUCTION AREA.

REMOVE STUMPS, MATTED ROOTS AND ROOTS LARGER THAN 2 INCHES IN DIAMETER WITHIN 6 INCHES OF THE SURFACE OF AREAS ON WHICH FILL AND/OR FOOTINGS ARE TO BE CONSTRUCTED.

REMOVE ALL TOPSOIL FROM THE CONSTRUCTION AREA. THIS MATERIAL SHALL NOT BE USED AS FILL MATERIAL, BUT MAY BE STOCKPILED AND LATER USED IN THE TOP 6 INCHES OF FILL OUTSIDE THE BUILDING PAD.

SITE, SUBFLOOR AND BEARING SURFACE PREPARATION:

A REPRESENTATIVE OF THE GEOTECHNICAL ENGINEER SHALL BE PRESENT TO CONFIRM COMPLETE EXCAVATION OF ANY UNCONTROLLED FILL.

OVEREXCAVATE ALL SOILS UNDERLYING FOOTINGS AND FLOOR SLAB AND ALL UNCONTROLLED FILL TO A MINIMUM DEPTH OF 3 FEET.

SCARIFY ALL EXPOSED SUBGRADE SOILS TO A DEPTH OF 12 INCHES, MOISTEN TO OPTIMUM MOISTURE CONTENT (+/- 2%) AND COMPACT TO THE DENSITY SPECIFIED HEREINAFTER.

PLACE ALL STRUCTURAL FILL IN APPROXIMATELY HORIZONTAL LAYERS NOT GREATER THAN 8 INCHES IN THICKNESS, MOISTEN TO OPTIMUM MOISTURE CONTENT (+/- 2%) AND COMPACT TO DENSITY SPECIFIED HEREINAFTER.

ALL EARTHWORK FOR THE BUILDING PAD SHALL EXTEND A MINIMUM OF 3 FEET BEYOND THE PERIMETER FOOTINGS.

STRUCTURAL FILL REQUIREMENTS:

GRADATION (ASTM D422):

SIEVE SIZE	PERCENT PASSING BY WEIGHT
6"	100
3"	90-100
NO. 200	10-50

PLASTICITY INDEX (ASTM D4318): 10 MAXIMUM

MATERIAL LARGER THAN 6 INCHES SHALL NOT BE PLACED IN THE STRUCTURAL FILL, AND MATERIAL LARGER THAN 4 INCHES SHALL NOT BE PLACED WITHIN TWELVE INCHES OF THE BEARING SURFACES OF SLABS OR FOUNDATIONS.

NO BRUSH, SOD, FROZEN MATERIAL OR OTHER UNSUITABLE MATERIAL SHALL BE PLACED IN THE STRUCTURAL FILL. MATERIAL SHALL BE PLACED IN SUCH A MANNER AS TO RESULT IN A UNIFORMLY COMPACTED FILL.

IMPORTED FILL OR EXISTING SOILS MAY BE USED FOR THE STRUCTURAL FILL. HOWEVER, IN ORDER TO MEET THE ABOVE CRITERIA, THE ON SITE SOILS WILL PROBABLY NEED TO BE MIXED WITH IMPORTED FILL. IT IS THE CONTRACTORS RESPONSIBILITY TO DETERMINE THE MOST APPROPRIATE METHOD TO PROVIDE THE REQUIRED STRUCTURAL FILL.

COMPACTION REQUIREMENTS:

SUBGRADE SOILS AND STRUCTURAL FILL MATERIALS SHALL BE COMPACTED TO THE FOLLOWING PERCENTAGES OF THE ASTM D1557 MAXIMUM DRY DENSITY AT +/- 2% OPTIMUM MOISTURE CONTENT:

MATERIAL	MINIMUM PERCENT COMPACTION
STRUCTURAL FILL IN THE BUILDING AREA	95
SUBBASE FOR SLAB SUPPORT	95
SUBGRADE BELOW STRUCTURAL FILL	95
MISCELLANEOUS BACKFILL	90

GRANULAR BASE COURSE REQUIREMENTS:

GRADATION (ASTM C136):

SIEVE SIZE	PERCENT PASSING BY WEIGHT
1"	100
3/4"	85-100
NO. 4	45-95
NO. 200	0-8

PLASTICITY INDEX (ASTM D4318): 3 MAXIMUM

THE COURSE AGGREGATE SHALL HAVE A PERCENT WEAR OF 50 OR LESS WHEN TESTED IN ACCORDANCE WITH ASTM C131.

UNDER-SLAB VAPOR RETARDER FOR CONCRETE SLABS-ON-GRADE

VAPOR RETARDER MUST HAVE THE FOLLOWING QUALITIES AT MINIMUM AND MEET FLOOR FINISH MANUFACTURER'S WARRANTY REQUIREMENTS.

WATER VAPOR RETARDER ASTM E1745: MEETS OR EXCEEDS CLASS A

MAXIMUM PERMEANCE ASTM E96: 0.01 PERMS OR AS REQUIRED TO MEET FLOORING MANUFACTURER'S WARRANTIES.

TENSILE STRENGTH ASTM E154, SECTION 9: NOT LESS THAN 45 LBS. FORCE/INCH

PUNCTURE RESISTANCE ASTM D1709, METHOD B.

THICKNESS OF RETARDER (PLASTIC) ACI 302.1R-96: NOT LESS THAN 15 MILS

MATERIAL: VIRGIN POLYETHYLENE OR POLYOLEFIN

SEAM TAPE: WATER VAPOR TRANSMISSION RATE ASTM E 96 0.3 PERMS OR LOWER

INSTALLATION SHALL BE IN ACCORDANCE WITH MANUFACTURER'S INSTRUCTIONS AND ASTM E 1643.

UNROLL VAPOR RETARDER WITH THE LONGEST DIMENSION PARALLEL WITH THE DIRECTION OF THE POUR.

LAP VAPOR RETARDER OVER FOOTINGS AND SEAL TO FOUNDATION WALLS.

OVERLAP JOINTS 6 INCHES AND SEAL WITH MANUFACTURER'S TAPE.

SEAL ALL PENETRATIONS (INCLUDING PIPES) PER MANUFACTURER'S INSTRUCTIONS. NO PENETRATION OF THE VAPOR RETARDER IS ALLOWED EXCEPT FOR REINFORCING STEEL AND PERMANENT UTILITIES.

REPAIR DAMAGED AREAS BY CUTTING PATCHES OF VAPOR RETARDER, OVERLAPPING DAMAGED AREA 6 INCHES AND TAPING ALL FOUR SIDES WITH TAPE.

ABBREVIATIONS

A/E	ARCHITECT/ENGINEER
AB	ANCHOR BOLT
ABAN	ABANDON
ABBRV	ABBREVIATION
AC	ASPHALTIC CONCRETE
ACI	AMERICAN CONCRETE INSTITUTE
ACP	ASPHALTIC CONCRETE PAVING
ACR	ACROSS
ACST	ACOUSTIC
AD	AREA DRAIN
ADA	AMERICANS WITH DISABILITIES ACT
ADDL	ADDITIONAL
ADDM	ADDENDUM
ADJ	ADJACENT/ADJOINING
ADMIN	ADMINISTRATION
AFF	ABOVE FINISHED FLOOR
AFG	ABOVE FINISHED GRADE
AFS	ABOVE FINISHED SLAB
AGGR	AGGREGATE
AHR	ANCHOR
AIA	AMERICAN INSTITUTE OF ARCHITECTS
AISC	AMERICAN INSTITUTE OF STEEL CONSTRUCTION
AISI	AMERICAN IRON AND STEEL INSTITUTE
AITC	AMERICAN INSTITUTE OF TIMBER CONSTRUCTION
ALNMT	ALIGNMENT
ALT	ALTERNATE, ALTERNATIVE
ALUM	ALUMINUM
AMT	AMOUNT
ANSI	AMERICAN NATIONAL STANDARDS INSTITUTE
APA	AMERICAN PLYWOOD ASSOCIATION
APPD	APPROVED
APPROX	APPROXIMATE
APPX	APPENDIX
AR	AS REQUIRED
ARCH	ARCHITECT
ASCE	AMERICAN SOCIETY OF CIVIL ENGINEERS
ASPH	ASPHALT
ASI	ARCHITECT'S SUPPLEMENTAL INSTRUCTIONS
ASSN	ASSOCIATION
ASTM	AMERICAN SOCIETY FOR TESTING AND MATERIALS
ATCH	ATTACHMENT
ATTN	ATTENTION
AWS	AMERICAN WELDING SOCIETY
AZ	AZIMUTH
B&F	BELL AND FLANGE
BAL	BALANCE
B/B	BACK TO BACK
BC	BOTTOM CHORD
BD	BOARD
BDRY	BOUNDARY
BEV	BEVEL
BFF	BELOW FINISH FLOOR
BKG	BACKING
BKGD	BACKGROUND
BLD	BUILD
BLDG	BUILDING
BLK	BLOCK/BLOCKING
BLT	BUILT
BLVD	BOULEVARD
BLW	BELOW
BM	BEAM
BO	BOTTOM OF
BOS	BOTTOM OF STEEL
BOT	BOTTOM
B PL	BASE PLATE
BRCG	BRACING
BRDG	BRIDGING
BRG	BEARING
BRG PL	BEARING PLATE
BS	BOTH SIDES
BSMT	BASEMENT
BT WLD	BUTT WELD
BTWN	BETWEEN
C	CHANNEL
C/C	CENTER TO CENTER
CAM	CAMBER
CAN	CANOPY
CD	CONSTRUCTION DOCUMENTS, CONTRACT DOCUMENTS
CEM	CEMENT
CHFR	CHAMFER
CHKD	CHECKED/CHECKERED
CI	CAST IRON
CIP	CAST-IN-PLACE
CJ	CONSTRUCTION JOINT
CJ	CONTRACTION JOINT
CJ	CONTROL JOINT
CL	CENTER LINE
CLG	CEILING
CLR	CLEAR
cm	CENTIMETER
CMU	CONCRETE MASONRY UNIT
CO	COMPANY
COA	CITY OF ALBUQUERQUE
COL	COLUMN
COM	COMMON
CONC	CONCRETE
CONN	CONNECTION
CONSTR	CONSTRUCTION
CONT	CONTINUOUS , CONTINUE
CONTR	CONTRACTOR
COORD	COORDINATE
CRSI	CONCRETE REINFORCING STEEL INSTITUTE
CSI	CONSTRUCTION SPECIFICATIONS INSTITUTE
CTR	CENTER
CTRL	CONTROL
CU	CUBIC
CU YD	CUBIC YARD
D	DEEP, DEPTH
D-B	DESIGN-BUILD
DAT	DATUM
DBL	DOUBLE
DEG	DEGREE
DEL	DELETE
DEMO	DEMOLITION
DET	DETAIL
DEV	DEVELOPMENT
DFTG	DRAFTING
DIA	DIAMETER
DIAG	DIAGONAL
DIFF	DIFFERENCE, DIFFERENTIAL
DIM	DIMENSION
DIST	DISTANCE
DIV	DIVIDE
DJ	DOUBLE JOIST
DL	DEAD LOAD
DOC	DOCUMENT
DOUG FIR	DOUGLAS FIR
DSGN	DESIGN
DWG	DRAWING
DWL/DWLS	DOWELS
E	EAST, MODULUS OF ELASTICITY
EA	EACH
EE	EACH END
EF	EACH FACE
EIFS	EXTERIOR INSULATION AND FINISH SYSTEM
EJ	EXPANSION JOINT
EL	ELEVATION
ELAST	ELASTOMERIC
ELEC	ELECTRIC
ELEM	ELEMENTARY
ELEV	ELEVATOR
EMBED	EMBEDDED/EMBEDMENT
ENCL	ENCLOSURE
ENGR	ENGINEER
EOS	EDGE OF SLAB
EPA	ENVIRONMENTAL PROTECTION AGENCY
EQ	EQUAL
EQUIP	EQUIPMENT
EQUIV	EQUIVALENT
ESCAL	ESCALATOR
ESMT	EASEMENT
EST	ESTIMATE
ETC	ET CETERA
EW	EACH WAY
EX	EXAMPLE
EXC	EXCAVATE
EXCL	EXCLUDE
EXIST	EXISTING
EXP	EXPANSION
EXT	EXTERIOR
F/F	FACE TO FACE
FAB	FABRIC
FACIL	FACILITY
FB	FLAT BAR
FD	FLOOR DRAIN
FDTN	FOUNDATION
FF	FAR FACE
FF EL	FINISH FLOOR ELEVATION
FIN GR	FINISH GRADE
FH	FLAT HEAD
FIN	FINISH
FIN FLR	FINISH FLOOR
FLG	FLANGE
FLR	FLOOR
FLR SK	FLOOR SINK
FOC	FACE OF CONCRETE
FOF	FACE OF FINISH
FOM	FACE OF MASONRY
FOS	FACE OF SLAB
FOS	FACE OF STUD
FOW	FACE OF WALL
FR	FRAME
FRMG	FRAMING
FS	FAR SIDE
FSTNR	FASTENER
FT	FOOT / FEET
FT/LB	FOOT/POUND
FT/LBF	FOOT/POUND FORCE
FTG	FOOTING
FUT	FUTURE
G	GIRDER
GA	GAGE
GALV	GALVANIZED
GALV STL	GALVANIZED STEEL
GR BM	GRADE BEAM
GC	GENERAL CONTRACTOR
GEN	GENERAL
GLU LAM	GLUED LAMINATED WOOD
GLZ	GLAZING
GOVT	GOVERNMENT
GRTG	GRATING
GT	GROUT
H	HIGH
HAS	HEADED ANCHOR STUD
HC	HOLLOW-CORE
HCP	HANDICAPPED
HD	HEAVY DUTY
HGR	HANGER
HLDN	HOLDDOWN
HORIZ	HORIZONTAL
HS	HIGH STRENGTH
HSKPG	HOUSEKEEPING
HSS	HOLLOW STRUCTURAL SECTIONS
HST	HOIST
HT	HEIGHT
IBC	INTERNATIONAL BUILDING CODE
ID	INSIDE DIAMETER
IF	INSIDE FACE
IFS	INSIDE FACE OF STUD
IN	INCH
INCL	INCLUDED
INFO	INFORMATION
IN-LB	INCH-POUND
IN-LBF	INCH-POUND FORCE
INSTL	INSTALL
INSUL	INSULATION
INT	INTERIOR
IR	INSIDE RADIUS
k	KIP
K	THOUSAND
KB	KNEE BRACE
KCJ	KEYED CONTROL JOINT
KIP	THOUSAND POUNDS
KIP FT	THOUSAND FOOT/POUNDS
KLF	KIPS PER LINEAL FOOT
KO	KNOCK OUT
KOP	KNOCK OUT PANEL
KSF	KIPS PER SQUARE FOOT
KSI	KIPS PER SQUARE INCH
L	ANGLE
LAM	LAMINATE
LATL	LATERAL
LBF	POUND-FORCE
LBR	LUMBER
LBS	POUND
LD BRG	LOAD BEARING
LF	LINEAR FEET (FOOT)
LIN	LINEAR
LL	LIVE LOAD
LLBB	LONG LEG BACK TO BACK
LLH	LONG LEG HORIZONTAL
LLV	LONG LEG VERTICAL
LONG	LONGITUDINAL
LT GA	LIGHT GAGE
LT WT	LIGHT WEIGHT
LVR	LOUVER
LWC	LIGHTWEIGHT CONCRETE
M	MOMENT
MAINT	MAINTENANCE
MATL	MATERIAL
MAX	MAXIMUM
MB	MACHINE BOLT
MC	MOMENT CONNECTION
MCJ	MASONRY CONTROL JOINT
MD	METAL DECK
ME	MECHANICAL ENGINEER
MECH	MECHANICAL
MEZZ	MEZZANINE
MFR	MANUFACTURER
MID	MIDDLE
MIN	MINIMUM
MISC	MISCELLANEOUS
ML	MICRO-LAMINATED
ML	MONOLITHIC
MO	MASONRY OPENING
MS	MACHINE SCREW
MSL	MEAN SEA LEVEL
MTL	METAL
N	NORTH
NA	NOT APPLICABLE
NF	NEAR FACE
NIC	NOT IN CONTRACT
NM	NEW MEXICO
NO	NUMBER
NOM	NOMINAL
NS	NEAR SIDE
NTS	NOT TO SCALE
O/O	OUT TO OUT
OA	OVERALL
OC	ON CENTER
OD	OUTSIDE DIAMETER
OF	OUTSIDE FACE
OFS	OUTSIDE FACE OF STUD
OPH	OPPOSITE HAND
OPNG	OPENING
OPP	OPPOSITE
OPT	OPTIONAL
OR	OUTSIDE RADIUS
OSB	ORIENTED STRAND BOARD
PAR	PARALLEL, PARAPET
PART	PARTIAL
PC	PIECE, PORTLAND CEMENT
PCC	PRECAST CONCRETE
PCF	POUNDS PER CUBIC FOOT
PCI	PRECAST/PRESTRESSED CONCRETE INSTITUTE
PED	PEDESTAL
PEN	PENETRATE
PERIM	PERIMETER
PERP	PERPENDICULAR
PH	PHASE
PIL	PILASTER
PL	PLATE
PLAT	PLATFORM
PLBG	PLUMBING
PLF	POUNDS PER LINEAR FOOT
PLM	PARALLAM
PLYWD	PLYWOOD
POS	POSITION
PP	PANEL POINT
PRCST	PRECAST
PREFAB	PREFABRICATE
PRELIM	PRELIMINARY
PREV	PREVIOUS
PSF	POUNDS PER SQUARE FOOT
PSI	POUNDS PER SQUARE INCH
PT	POST-TENSIONED
PT CONC	POST-TENSIONED CONCRETE
PTN	PARTITION
PVG	PAVING
QTY	QUANTITY
QUAD	QUADRANT
R	RADIUS, RISER
RC	REINFORCED CONCRETE
RD	ROAD, ROOF DRAIN
REC	RECESSED
REF	REFERENCE
REINF	REINFORCE/REINFORCEMENT
REPL	REPLACE
REQ	REQUIRE
REQD	REQUIRED
REV	REVISION
RGD INS	RIGID INSULATION
RFI	REQUEST FOR INFORMATION
RND	ROUND
RO	ROUGH OPENING
RT	RIGHT
RVL	REVEAL
S	SOUTH
SCHEM	SCHEMATIC
SCHED	SCHEDULE
SD	SHOP DRAWINGS
SDI	STEEL DECK INSTITUTE
SDL	SADDLE
SE	STRUCTURAL ENGINEER
SECT	SECTION
SF	SQUARE FEET (FOOT)
SHT	SHEET, SHAFT
SHTHG	SHEATHING
SIM	SIMILAR
SJI	STEEL JOIST INSTITUTE
SLNT	SEALANT
SM	SMOOTH
SP	SUMP PIT
SPA	SPACE/SPACES
SPEC	SPECIFICATION
SPRT	SUPPORT
SQ	SQUARE
SQ IN	SQUARE INCH
SQ YD	SQUARE YARD
SSPC	STRUCTURAL STEEL PAINTING COUNCIL
ST	STAIRS
STAG	STAGGERED
STD	STANDARD
STIF	STIFFENER
STIR	STIRRUP
STL	STEEL
STL LNTL	STEEL LINTEL
STL JST	STEEL JOIST
STL PL	STEEL PLATE
STL RF DK	STEEL ROOF DECK
STR	STRINGERS
STRUCT	STRUCTURAL
SUB	SUBSTITUTE
SUF	SUFFICIENT
SUP	SUPPLEMENTARY
SUPPL	SUPPLEMENT
SYM	SYMBOL
SYMM	SYMMETRICAL
SYS	SYSTEM
T	TREAD
T&B	TOP AND BOTTOM
T&G	TONGUE AND GROOVE
TAN	TANGENT
TB	THRU BOLT
TEMP	TEMPORARY
THD	THREAD
THK	THICKNESS
THRU	THROUGH
TJI	TRUSS JOIST INSTITUTE
TO	TOP OF
TOB	TOP OF BEAM
TOC	TOP OF CONCRETE
TOC FTG	TOP OF CONCRETE FOOTING
TOC WALL	TOP OF CONCRETE WALL
TOF	TOP OF FOOTING
TOG	TOP OF GRATE
TOJ	TOP OF JOIST
TOL	TOLERANCE
TOM	TOP OF MASONRY
TOP	TOP OF PARAPET
TOS	TOP OF SLAB
TOS	TOP OF STEEL
TOW	TOP OF WALL
TRANS	TRANSVERSE
TRNBKL	TURNBUCKLE
TYP	TYPICAL
UBC	UNIFORM BUILDING CODE
UNO	UNLESS NOTED OTHERWISE
VAR	VARIES
VERT	VERTICAL
VIF	VERIFY IN FIELD
VNR	VENEER
VR	VAPOR RETARDER
VRFY	VERIFY
W	WEST, WIDE
W/	WITH
W/O	WITHOUT
WBL	WOOD BLOCKING
WD	WOOD
WF	WIDE FLANGE
WF BM	WIDE FLANGE BEAM
WL	WIND LOAD
WLD	WELDED
WM	WIRE MESH
WP	WATERPROOFING
WSCT	WAINSCOT
WT	WEIGHT
WWF	WELDED WIRE FABRIC
WWM	WELDED WIRE MESH
X BRACE	CROSS BRACING
XXH	DOUBLE EXTRA HEAVY
YD	YARD

Chavez-Grieves
consulting engineers, inc.
4700 LINCOLN RD NE STE 102 • ALBUQUERQUE, NM 87109
PHONE (505) 344-4080 • FAX (505) 343-8759

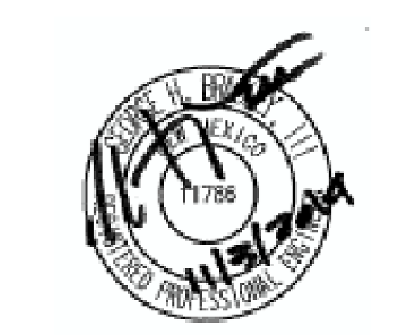

autotroph
architecture.planning.sustainable design consulting

No.	Description	Date

SENIOR CENTER IMPROVEMENTS

LUISA	VILLA CONSUELO	PASATIEMPO
SENIOR CENTER	SENIOR CENTER	SENIOR CENTER
1500 LUISA STREET	1200 CAMINO CONSUELO STREET	664 ALTA VISTA STREET
SANTA FE, NM 87504	SANTA FE, NM 87505	SANTA FE, NM 87504

LUISA SENIOR CENTER

GENERAL STRUCTURAL NOTES

Project number 1310

Date 1 OCTOBER 2014

L-S0.1

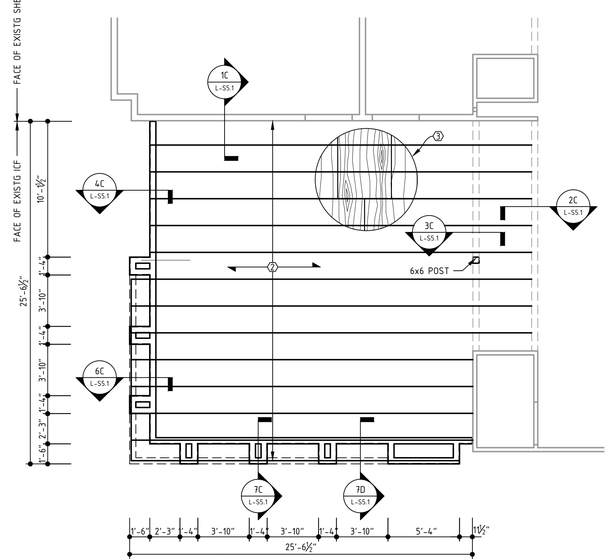

4C FRAMING PLAN - ADDITION
3/16"=1'-0"

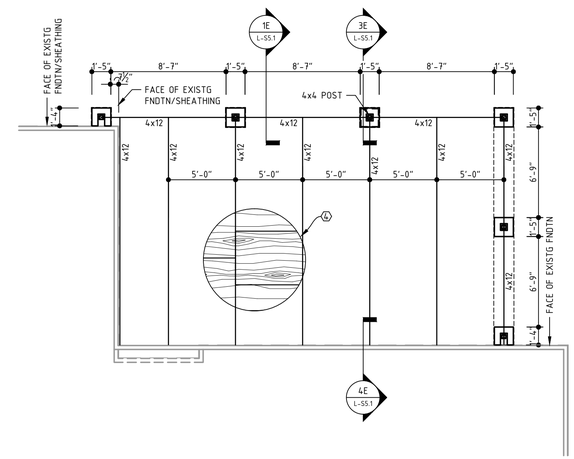

6C FRAMING PLAN - PORTAL
3/16"=1'-0"

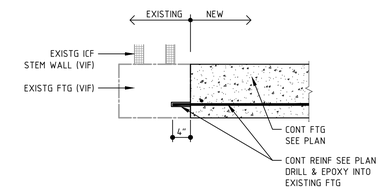

1B SECTION DETAIL - NEW FOOTING @ EXISTING FOOTING
3/4"=1'-0"

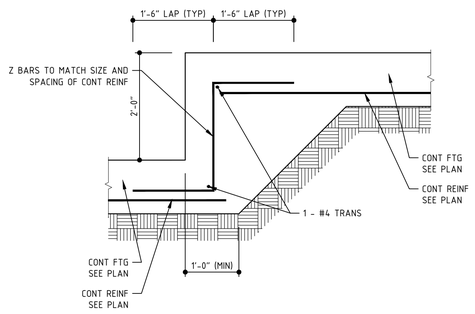

1A DETAIL - STEPPED FOOTING
3/4"=1'-0"

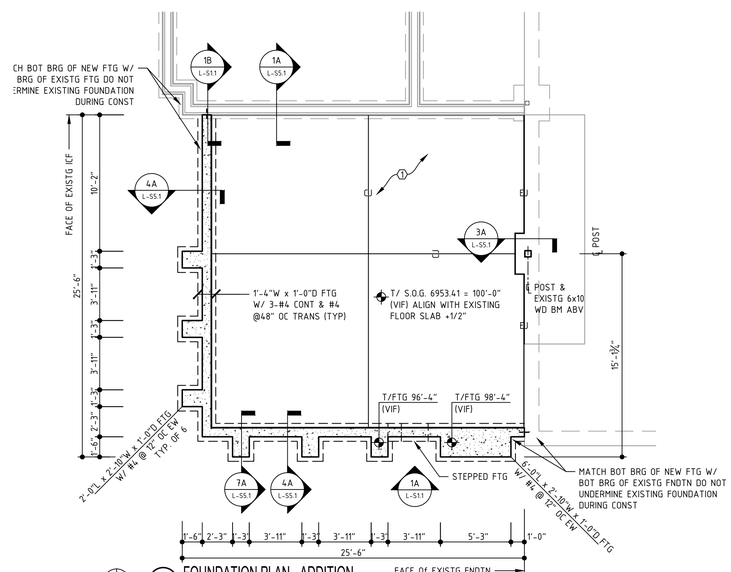

4A FOUNDATION PLAN - ADDITION
3/16"=1'-0"

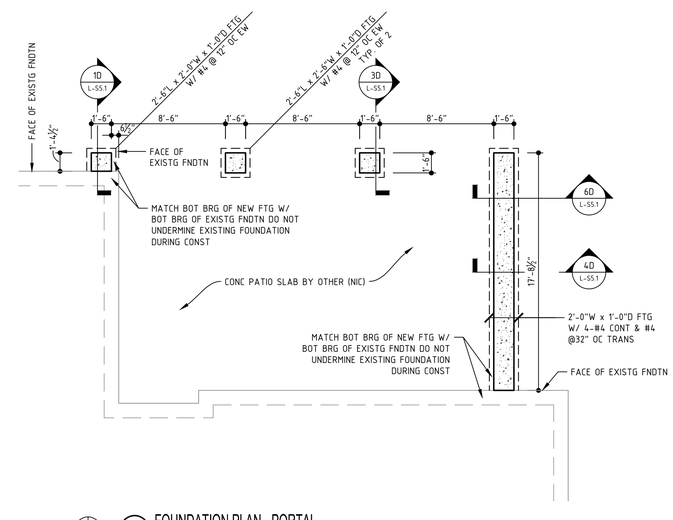

6A FOUNDATION PLAN - PORTAL
3/16"=1'-0"

GENERAL NOTES

DIMENSIONS ARE TO FACE OF CONCRETE OR STUD UNLESS NOTED OTHERWISE.

EXISTING CONSTRUCTION IS PER AVAILABLE EXISTING DRAWINGS. ALL EXISTING CONSTRUCTION AND DIMENSIONS SHALL BE FIELD VERIFIED PRIOR TO CONSTRUCTION. SHOULD CONDITIONS VARY FROM THOSE SHOWN, CONTACT ENGINEER BEFORE PROCEEDING.

COORDINATE ALL DIMENSIONS WITH ARCHITECTURAL DRAWINGS.

ALL EXTERIOR WALLS SHALL BE SHEATHED WITH ½" APA RATED PLYWOOD SHEATHING. ATTACH SHEATHING TO SUPPORTS W/ 8d COMMON NAILS @ 8" O.C.

CJ INDICATES SLAB CONTROL JOINT. SEE DTL 6A/L-S5.1

SEE ARCHITECTURAL DRAWINGS FOR ALL BEARING AND PARAPET ELEVATIONS.

UNLESS NOTED OTHERWISE USE NAILING SCHEDULE ON SHEET L-S1.0 FOR ALL NAILING ATTACHMENTS

KEYED NOTES

1. 4" CONCRETE SLAB REINFORCED WITH #4 @ 24" O.C. EACH WAY OVER 15 MIL VAPOR BARRIER OVER 4" GRANULAR BASE COURSE OVER COMPACTED SUBGRADE.
2. 11¾" TJI 360 @ 16" O.C.
3. ½" APA RATED PLYWOOD SHEATHING. ATTACH SHEATHING TO SUPPORTS WITH 8d NAILS @ 6" O.C. ALONG PANEL EDGES AND WITH 8d NAILS @12" O.C. IN REMAINING FIELD OF PANEL.
4. ½" APA RATED PLYWOOD SHEATHING OVER 2x6 T&G DECK.

Chavez-Grieves
consulting engineers, inc.
4700 LINCOLN RD NE STE 102 • ALBUQUERQUE, NM 87109
PHONE (505) 344-4080 • FAX (505) 343-8759

autotroph
architecture.planning.sustainable design consulting

No.	Description	Date

SENIOR CENTER IMPROVEMENTS

LUISA	VILLA CONSUELO	PASATIEMPO
SENIOR CENTER	SENIOR CENTER	SENIOR CENTER
1500 LUISA STREET	1200 CAMINO CONSUELO STREET	664 ALTA VISTA STREET
SANTA FE, NM 87504	SANTA FE, NM 87504	SANTA FE, NM 87504

LUISA SENIOR CENTER

FOUNDATION PLANS
FRAMING PLANS

Project number 1310
Date 1 OCTOBER 2014

L-S1.1

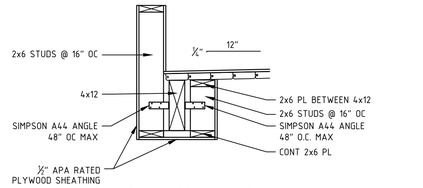

1E SECTION - PORTAL ROOF FRAMING
3/4"=1'-0"

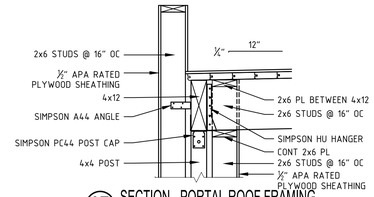

3E SECTION - PORTAL ROOF FRAMING
3/4"=1'-0"

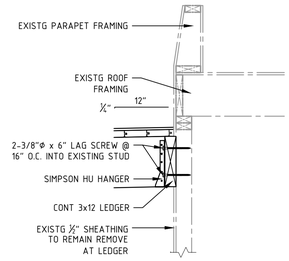

4E SECTION - PORTAL ROOF FRAMING
3/4"=1'-0"

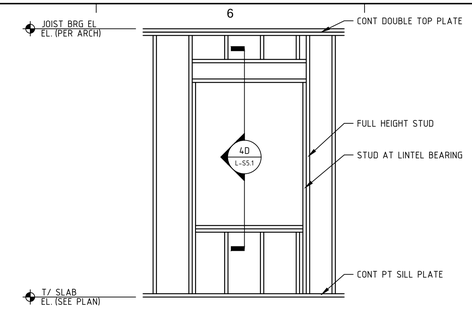

6E ELEVATION - OPENING FRAMING
NOT TO SCALE

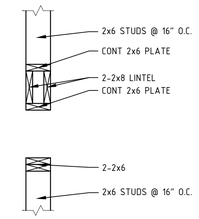

7E SECTION - BEARING WALL OPENING
3/4"=1'-0"

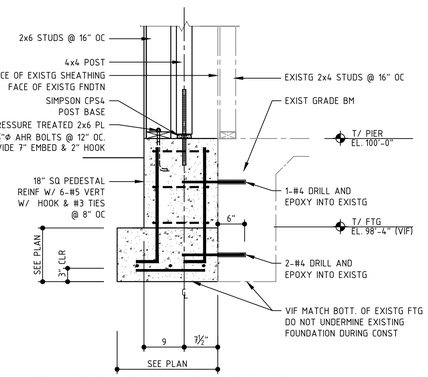

1D SECTION - POST FOUNDATION @ EXISTG WALL
3/4"=1'-0"

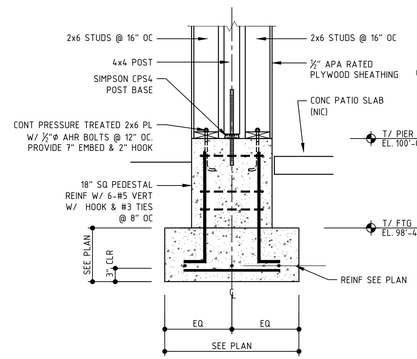

3D SECTION - POST FOUNDATION
3/4"=1'-0"

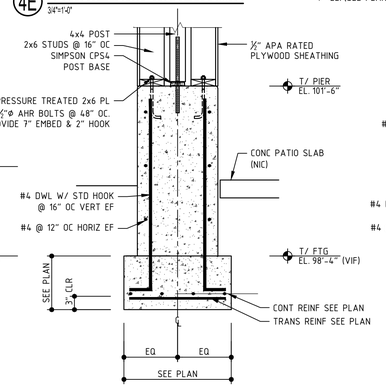

4D SECTION - POST FOUNDATION @ BANCO
3/4"=1'-0"

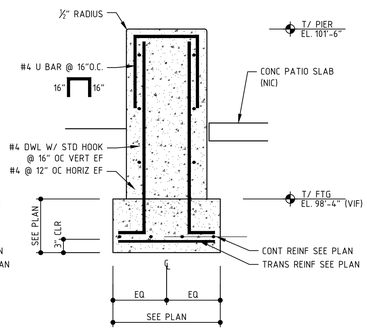

6D ELEVATION - BANCO FOUNDATION
3/4"=1'-0"

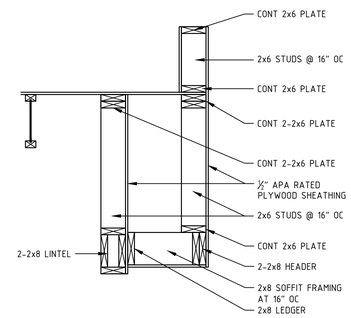

7D SECTION - ROOF FRAMING
3/4"=1'-0"

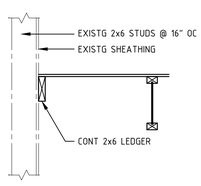

1C SECTION - ROOF FRAMING
3/4"=1'-0"

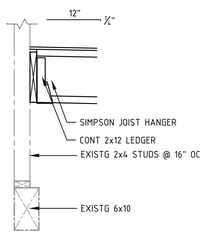

2C SECTION - ROOF FRAMING
3/4"=1'-0"

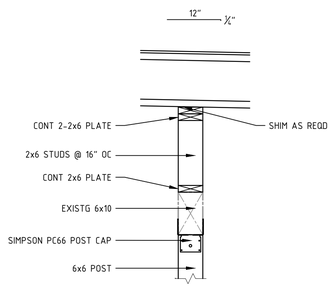

3C SECTION - ROOF FRAMING
3/4"=1'-0"

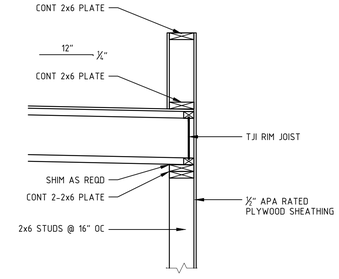

4C SECTION - ROOF FRAMING
3/4"=1'-0"

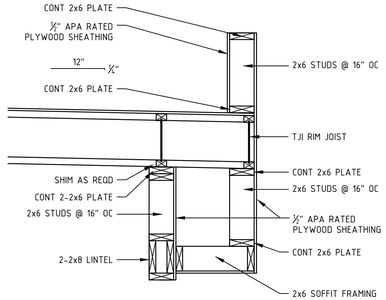

6C SECTION - ROOF FRAMING
3/4"=1'-0"

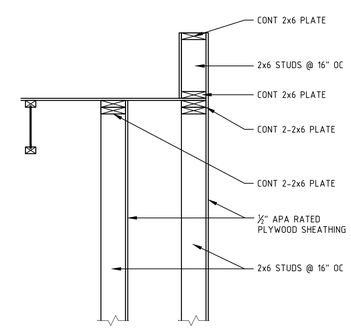

7C SECTION - ROOF FRAMING
3/4"=1'-0"

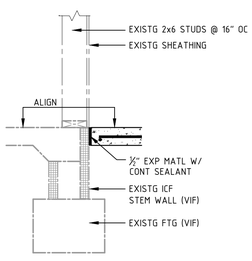

1A SECTION - SLAB @ EXISTG WALL
3/4"=1'-0"

2A SECTION - SLAB @ EXISTG SLAB
3/4"=1'-0"

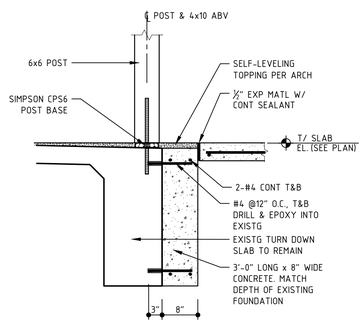

3A SECTION - POST FOUNDATION
3/4"=1'-0"

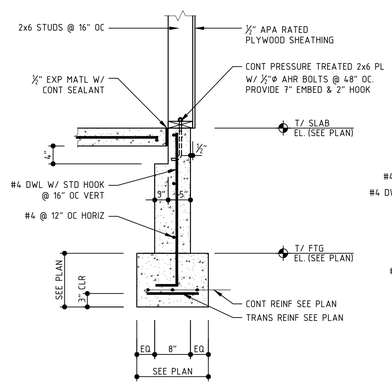

4A SECTION - PERIMETER FOUNDATION
3/4"=1'-0"

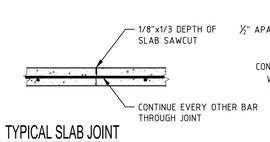

6A TYPICAL SLAB JOINT
3/4"=1'-0"

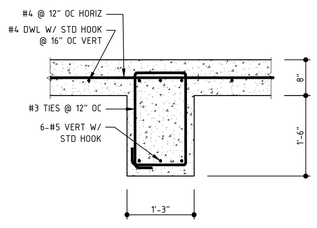

6A PLAN DETAIL - PERIMETER FOUNDATION
3/4"=1'-0"

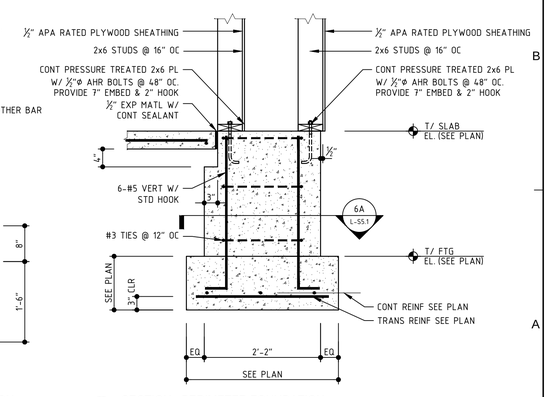

7A SECTION - PERIMETER FOUNDATION
3/4"=1'-0"

Chavez-Grieves
consulting engineers, inc.
4700 LINCOLN RD NE STE 102 • ALBUQUERQUE, NM 87109
PHONE (505) 344-4080 • FAX (505) 343-8759

autotroph
architecture.planning.sustainable design consulting

No.	Description	Date

SENIOR CENTER IMPROVEMENTS

LUISA	VILLA CONSUELO	PASATIEMPO
SENIOR CENTER	SENIOR CENTER	SENIOR CENTER
1500 LUISA STREET	1200 CAMINO CONSUELO STREET	664 ALTA VISTA STREET
SANTA FE, NM 87504	SANTA FE, NM 87504	SANTA FE, NM 87504

LUISA SENIOR CENTER

STRUCTURAL DETAILS

Project number 1310

Date 1 OCTOBER 2014

L-S5.1

MECHANICAL LEGEND

HVAC

SYMBOL DOUBLE	SYMBOL SINGLE	DESCRIPTION
		RETURN DUCTWORK UP
		SUPPLY DUCTWORK UP
		EXHAUST DUCTWORK UP
		ROUND DUCTWORK UP
		RETURN DUCTWORK DOWN
		SUPPLY DUCTWORK DOWN
		EXHAUST DUCTWORK DOWN
		ROUND DUCTWORK DOWN
		TRANSITION RECTANGULAR TO RECTANGULAR OR TRANSITION ROUND TO ROUND
		TRANSITION RECTANGULAR TO ROUND
		DUCTWORK ROUTED BELOW OTHER DUCTWORK
		CAPPED DUCTWORK
		EXISTING DUCTWORK
		DUCTWORK TO BE REMOVED
		DUCT WITH INTERNAL LINING
		FIRE SMOKE DAMPER
		MOTORIZED BALANCING DAMPER
		MANUAL BALANCING DAMPER
		BACKDRAFT DAMPER
		CONICAL TAP
		RECTANGULAR TAP
		FLEXIBLE DUCT
		SQUARE SUPPLY AIR DIFFUSER
		ROUND SUPPLY AIR DIFFUSER
		RETURN AIR GRILLE
		CEILING SLOT SUPPLY AIR DIFFUSER
		SIDEWALL RETURN/SUPPLY AIR REGISTER
		FLOOR RETURN/SUPPLY AIR REGISTER
		ACCESS PANEL
	H	HUMIDIFIER

VALVES

SYMBOL	DESCRIPTION
	GATE VALVE
	CHECK VAVLE
	BALL VALVE
	PRESSURE REDUCING VALVE
	OUTSIDE STEM AND YOKE
	GLOBE VALVE
	THREE WAY VALVE
	AUTOMATIC TEMPERATURE CONTROL VALVE
	PLUG VALVE
	BUTTERFLY VALVE
	TWO WAY CONTROL VALVE
	THREE WAY CONTROL VALVE
	DRAIN VALVE
	SOLENOID VALVE
	RELIEF VALVE
	AIR RELIEF VALVE
	STRAINER
	STEM VALVE
	CIRCUIT SETTER OR BALANCING VALVE
	BALANCING, GAS COCK OR GAUGE COCK
	STEAM TRAP
	VALVE IN RISER
	AUTO FLOW CONTROL VALVE

PIPING

SYMBOL	DESCRIPTION
	EXISTING PIPING
	PIPING TO BE REMOVED
—HWS—	HOT WATER SUPPLY PIPING
—HWR—	HOT WATER RETURN PIPING
—CWS—	COLD WATER SUPPLY PIPING
—CWR—	COLD WATER RETURN PIPING
—CHWS—	CHILLED WATER SUPPLY PIPING
—CHWR—	CHILLED WATER RETURN PIPING
—CTS—	COOLING TOWER SUPPLY PIPING
—CTR—	COOLING TOWER RETURN PIPING
—SS—	STEAM SUPPLY PIPING
—SR—	STEAM CONDENSATE RETURN PIPING
—C—	CONDENSATE PIPING
—DR—	EQUIPMENT DRAIN PIPING
—RO—	REVERSE OSMOSIS WATER PIPING
—V—	VENT PIPING

FITTINGS

SYMBOL	DESCRIPTION
	UNION
	TEE
	ELBOW
	ELBOW UP
	ELBOW DOWN
	TEE UP
	TEE DOWN
	BREAK
	CAP
	PRESSURE GAUGE
	THERMOMETER
	FLOW SWITCH
	PRESSURE SWITCH

TEXT SYMBOLS

SYMBOL	DESCRIPTION
#	MECHANICAL KEYED NOTES
	PIPE LEADER LINE FOR SIZES
	POINT OF CONNECTION
	POINT OF DISCONNECTION
###	EQUIPMENT DESIGNATION
### CFM GRILLE A	AIR DEVICE DESIGNATION
#	REVISION DELTA
#X / X#	SECTION NUMBER / SHEET NUMBER
#X / X#	DETAIL DESIGNATION
TYPE LENGTH	BASEBOARD DESIGNATION
##"x##"	RECTANGULAR DUCTWORK SIZING
##"ø	ROUND DUCTWORK SIZING
	ARROW INDICATES DIRECTION OF FLOW
UP	RISE IN DIRECTION OF FLOW
DN	DROP IN DIRECTION OF FLOW
	RETURN AIR FLOW
	SUPPLY AIR FLOW
	EXHAUST AND RETURN AIR FLOW
T	THERMOSTAT
H	SPACE HUMIDISTAT
HS	SPACE HUMIDITY SENSOR
P	SPACE PRESSURE SENSOR
CD	CARBON DIOXIDE SENSOR
CM	CARBON MONOXIDE SENSOR
SD	DUCT MOUNTED SMOKE DETECTOR

NOTE: THIS SYMBOLS LEGEND IS A GENERAL REPRESENTATION OF DEVICES USED. SOME PROJECTS MAY NOT UTILIZE ALL SYMBOLS REPRESENTED. COORDINATE ALL SYMBOLS FROM PLANS.

GENERAL NOTES:

MECHANICAL CONTRACTOR SHALL:

A. PROVIDE AND INSTALL ALL MATERIAL AND EQUIPMENT AS REQUIRED BY UPC, UMC, NFPA, LIFE SAFETY CODE, GAS CODE, AND ALL OTHER LOCAL CODES AND ORDINANCES THAT APPLY WHETHER SHOWN ON THE DRAWINGS OR NOT. WHERE THERE IS A DISCREPANCY BETWEEN THE CODES OR ORDINANCES AND THE DRAWINGS, THE MORE STRINGENT APPLICATION SHALL APPLY.

B. LAYOUT AND INSTALL COMPLETE AND FUNCTIONAL MECHANICAL SYSTEMS, INCLUDING TEMPORARY CUTOFF OF EXISTING UTILITIES, AND ALL CUTTING, PATCHING, AND REPAIR ASSOCIATED WITH INSTALLING THE SYSTEMS.

C. VIBRATIONALLY ISOLATE FROM THE BUILDING STRUCTURE ALL EQUIPMENT AND PIPING IN THE MECHANICAL ROOM, INCLUDING GAS, AIR INTAKE, EXHAUST, ETC. COORDINATE TO ASSURE THAT AS QUIET AN OPERATING SYSTEM AS POSSIBLE IS INSTALLED.

D. INSTALL FREE AREA OF THE DUCT WORK AS SHOWN ON THE DRAWINGS.

E. PROVIDE ALL DUCT WORK CONNECTIONS AND TRANSITIONS AT GRILLES, DIFFUSERS, REGISTERS, FILTERS, COILS, AND OTHER LOCATIONS WHERE REQUIRED. CONSTRUCT ALL TRANSITIONS AND CONNECTIONS ACCORDING TO SMACNA STANDARDS.

F. PROVIDE A TESTING AND BALANCING (T&B)AGENCY. THE T&B AGENCY SHALL BE RESPONSIBLE FOR PROVIDING AND INSTALLING SHEAVES, BALANCING DAMPERS, AND ALL EQUIPMENT NECESSARY TO PROVIDE PLUS OR MINUS 10% OF THE GPM AND/OR 10% OF CFM REQUIRED AT EACH TERMINAL UNIT. NO CHANGE ORDERS WILL BE ALLOWED AS A RESULT OF THE CONTRACTOR'S FAILURE TO PROVIDE EQUIPMENT NECESSARY FOR TEST AND BALANCE WHETHER SHOWN ON THE DRAWINGS OR NOT.

G. COORDINATE WORK WITH THE GENERAL CONTRACTOR TO HAVE THE ROOFTOP EQUIPMENT, DUCT WORK, AND INSULATION JACKETS PAINTED TO THE ARCHITECT'S REQUIREMENTS.

H. INSTALL ALL BOILER ROOM PIPING TO BE PLUMB AND LEVEL. INSULATE PIPING IN CRAWL SPACES, TUNNELS, AND IN MECHANICAL ROOM PER SPECIFICATIONS AND/OR MODEL ENERGY CODE.

I. PROVIDE AND INSTALL ALL MECHANICAL EQUIPMENT, TRANSFORMERS, RELAYS, AND OTHER ELEMENTS NECESSARY FOR A COMPLETE OPERATING SYSTEM. COMPLETE ALL 24 VOLT CONTROL WIRING AND EQUIPMENT TO THE ABOVE. ALL LINE VOLTAGE WIRING TO THE ABOVE SHALL BE COMPLETED BY THE ELECTRICAL CONTRACTOR.

J. ALTER DIMENSIONS OF THE DUCT WORK IN THE CEILING SPACE FROM SIZES INDICATED ON THE DRAWINGS ONLY AT SPECIFIC LOCATIONS WHEN NECESSARY TO FIT THE DUCT WORK IN THE SPACE AVAILABLE. REROUTE DUCT WORK IN CEILING SPACE TO AVOID OTHER MECHANICAL EQUIPMENT, LIGHT FIXTURES, ETC. MAINTAIN THE SAME FREE AREA AND SUBMIT PROPOSED CHANGES TO THE ENGINEER FOR APPROVAL. BE RESPONSIBLE FOR VERIFYING SPACE LIMITATIONS BEFORE DUCT WORK FABRICATION AND SHALL MAKE CHANGES ACCORDINGLY. PROVIDE ALL NECESSARY TRANSITIONS.

K. VERIFY EQUIPMENT SPECIFIED IS CORRECT FOR FIELD APPLICATION INCLUDING BUT NOT LIMITED TO SIZES, LOCATIONS, CLEARANCES, STRUCTURAL CONSISTENCY, ETC. BEFORE ORDERING OR INSTALLING AND SHALL MAKE CHANGES, DELETIONS, OR ADDITIONS TO ANY AND ALL APPLICATIONS THAT APPLY BEFORE ORDERING EQUIPMENT. SUBMIT CHANGES, ADDITIONS AND/OR MODIFICATIONS REQUIRED TO ENGINEER FOR APPROVAL. NO CHANGE ORDERS OR PASSAGE OF LIABILITY BY THE CONTRACTOR(S) WILL BE ALLOWED AS A RESULT OF THE CONTRACTOR(S) FAILURE TO VERIFY EQUIPMENT.

L. COORDINATE ALL PROPOSED ROOF PENETRATIONS WITH GENERAL CONTRACTOR AND ARCHITECT AND RELOCATE IF NECESSARY. COORDINATE WITH GENERAL CONTRACTOR/ARCHITECT/OWNER.

M. PROVIDE ONE UNION AT ALL VALVES.

N. INSTALL CONDENSATE AND OVERFLOW PIPING FROM ALL MECHANICAL EQUIPMENT DRAIN POINTS. EXTEND AND TERMINATE PER UMC/UPC. ALL INTERIOR CONDENSATE AND OVERFLOW PIPING SHALL BE INSULATED PER SPECIFICATIONS FOR APPROPRIATE TEMPERATURE RANGE.

O. ALL BUILDING AND MECHANICAL OPENINGS SHALL BE MADE WEATHER TIGHT AT END OF WORK DAY.

GENERAL DEMOLITION NOTES:

A. BECOME FAMILIAR WITH THE EXISTING CONDITIONS PRIOR SUBMITTING A COMPLETE BID WITHIN THE SCOPE OF THE PLANS AND SPECIFICATIONS. WHEN UNCLEAR, VERIFY THE EXTENT OF REMOVALS PRIOR TO BID. PRIOR TO THE CONCLUSION OF THE ADDENDUM PERIOD IN THE BIDDING TIME FRAME, BRING TO THE ATTENTION OF THE ENGINEER ANY QUESTIONS IN REGARD TO THE EXTENT OF WORK OR ANY OTHER ISSUE RELATING TO THIS PROJECT. WITHOUT ANY CLARIFICATION BEYOND THESE AND THE BID DOCUMENTS, THE SUBMITTAL OF A BID WARRANTS THAT THE BIDDER FULLY UNDERSTANDS THE SCOPE.

B. REMOVE ALL EXISTING MATERIAL AND EQUIPMENT INDICATED AND SALVAGE TO THE OWNER. THE OWNER SHALL HAVE FIRST RIGHTS TO ALL EQUIPMENT TO BE REMOVED. DISPOSE OF ALL EQUIPMENT AND MATERIAL THAT IS NOT WANTED BY OWNER IN AN APPROVED MANNER PER THE LOCAL DICTATING AUTHORITY.

C. WHEN THE EXTENT OF REMOVAL IS UNCLEAR, REQUEST CLARIFICATION FROM ENGINEER PRIOR TO COMMENCING WORK.

D. WHEN MECHANICAL SYSTEMS ARE BEING REMODELED, COVER AND SEAL OPENINGS IN DUCTWORK, PIPING, OR MECHANICAL EQUIPMENT TO REMAIN IN OPERATION THROUGH REMAINDER OF PROJECT.

E. WHEN NOTES CALL FOR "DISCONNECT AND REMOVE" MECHANICAL EQUIPMENT, COORDINATE WITH ELECTRICAL SUBCONTRACTOR TO REMOVE ALL ASSOCIATED WIRE AND EXPOSED CONDUIT TO SOURCE. COORDINATE WITH ELECTRICAL SUBCONTRACTOR FOR THE RE–USE OF EXISTING CONDUITS AND/OR CONDUCTORS WHERE FEASIBLE PROVIDING THAT THEY ARE IN GOOD CONDITION AND COMPLY WITH CURRENT CODES AND STANDARDS.

F. REPAIR ALL DAMAGE TO WALLS, CEILING, ETC. IN A WORKMANLIKE MANNER. SEAL ALL WALL AND CEILING OPENINGS WITH MATCHING MATERIAL.

G. THE LOCATIONS OF EQUIPMENT SHOWN ON THE DRAWINGS IS BASED ON SITE OBSERVATIONS AND THE BEST AVAILABLE INFORMATION AT THE TIME OF DRAWING PREPARATION AND SOME DISCREPANCIES MAY EXIST. VERIFY THE EXACT LOCATIONS OF EQUIPMENT TO BE REMOVED IN THE FIELD AND REQUEST CLARIFICATION FROM ENGINEER WHEN EQUIPMENT LOCATION OR EXISTENCE DIFFERS FROM PLANS.

MECHANICAL & ELECTRICAL ENGINEERING, INC.
PROJECT #14031

SANTA FE:
1222 Luisa St. Suite B
Santa Fe, New Mexico 87505
505/983–2389

ALBUQUERQUE:
8417 Washington Pl., NE
Albuquerque, NM 87113
505/856–1699

P: FP: M: E:

BYRON G. SMITH
NEW MEXICO
21576
PROFESSIONAL ENGINEER
14D3 16 1744

autotroph
architecture.planning.sustainable design consulting

LUISA SENIOR CENTER 1500 LUISA STREET SANTA FE, NM 87504	VILLA CONSUELO SENIOR CENTER 1200 CAMINO CONSUELO STREET SANTA FE, NM 87504
PASATIEMPO SENIOR CENTER 664 ALTA VISTA STREET SANTA FE, NM 87504	

LUISA SENIOR CENTER

MECHANICAL LEGEND AND GENERAL NOTES

Project number	1210
Date	1 OCTOBER 2014
Drawn by	RD
Checked by	KMT,BGS

L-M0.0

GENERAL NOTES:

A. DISCONNECT AND REMOVE ALL EQUIPMENT AS SHOWN BY CROSS HATCHING.

B. REFER TO SHEET L-M0.0 FOR ADDITIONAL INFORMATION ON REQUIREMENTS FOR REMOVAL.

KEYED NOTES: ○

1. DISCONNECT AND REMOVE EXISTING EVAPORATIVE COOLER ON ROOF. PATCH ROOF TO MATCH EXISTING.
2. DISCONNECT AND REMOVE EXISTING CLOSET FURNACE UNIT AND ALL ACCESSORIES, CONTROLS, AND DUCTWORK CONNECTIONS. REMOVE DUCTWORK PLENUM AND ALL CONNECTIONS AND SUPPORTS.
3. EXISTING WALL CASSETTE UNITS AND ROOF TOP CONDENSERS TO REMAIN.
4. DISCONNECT AND REMOVE EXISTING DIFFUSERS AND GRILLES IN CEILING. MAINTAIN MATERIAL FOR REINSTALLATION WITH NEW CEILING. REFER TO ARCHITECTURAL SHEETS FOR ADDITIONAL INFORMATION.
5. REMOVE EXISTING MECHANICAL EQUIPMENT AND MAINTAIN FOR REINSTALLATION. REFER TO SHEET L-M1.1 FOR ADDITIONAL INFORMATION.
6. DISCONNECT AND REMOVE EXISTING RELIEF GRILLE FOR INSTALLATION OF NEW EQUIPMENT. REFER TO SHEET L-M1.1 FOR ADDITIONAL INFORMATION.
7. EXISTING REZNOR GAS FIRED EVAPORATIVE COOLER MAKE UP AIR UNIT TO REMAIN. REFER TO NEW WORK FOR ADDITIONAL INFORMATION.
8. REMOVE EXISTING RELIEF DAMPER AND LOUVER. PATCH OPENING WITH BLANKED SHEET METAL. SEAL ALL SEAMS AND INSULATE OPENING WITH R-22 BATTON INSULATION.
9. EXISTING RELIEF DAMPER TO REMAIN FOR FURNACE OUTDOOR AIR RELIEF.
10. NO MECHANICAL WORK IN THIS AREA.

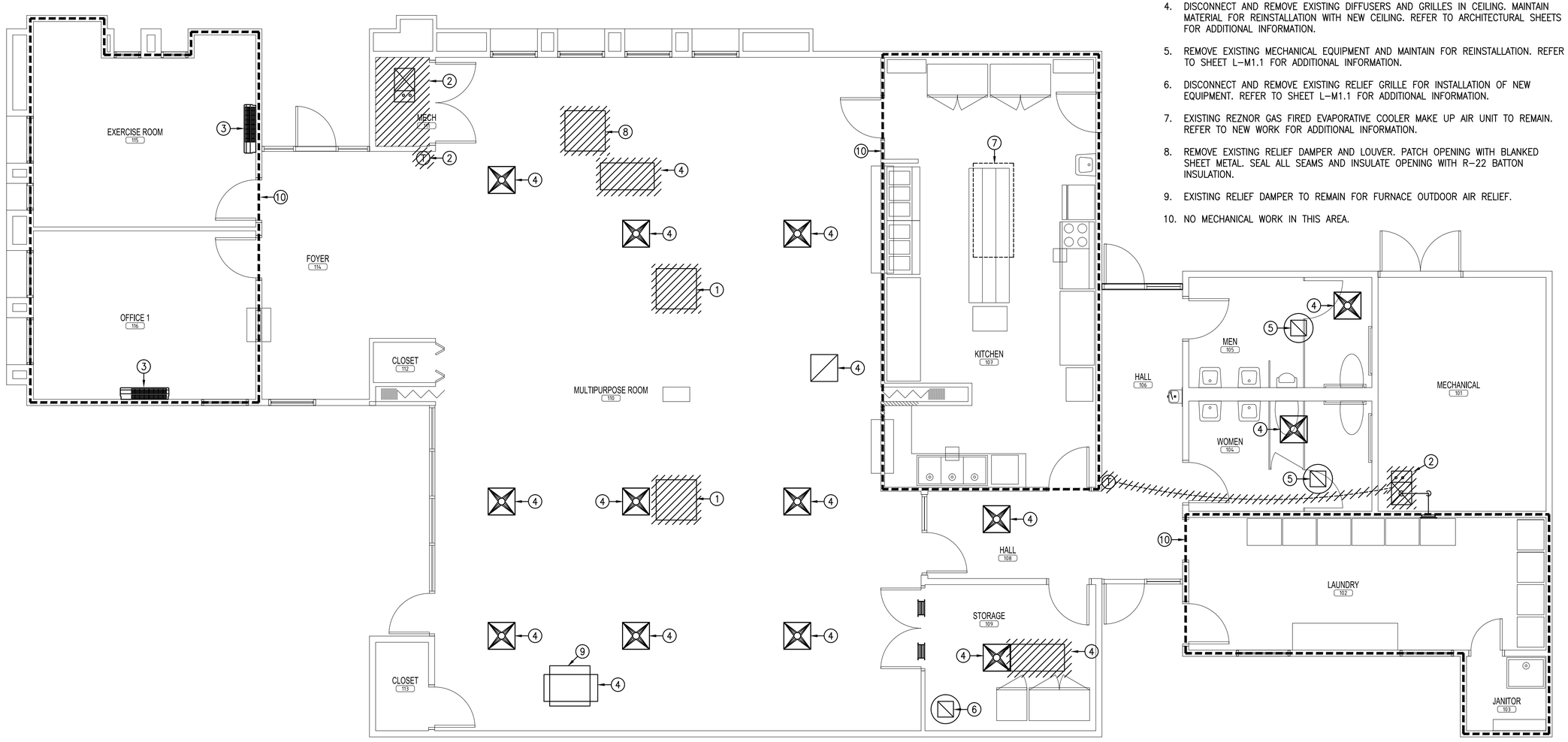

LUISA STREET – MECHANICAL DEMOLITION FLOOR PLAN

SCALE: 1/4" = 1'-0"

MECHANICAL & ELECTRICAL ENGINEERING, INC.
PROJECT #14031

SANTA FE:
1222 Luisa St. Suite B
Santa Fe, New Mexico 87505
505/983-2389

ALBUQUERQUE:
8417 Washington Pl., NE
Albuquerque, NM 87113
505/856-1699

P:	FP:	M:	E:

BYRON G. SMITH NEW MEXICO 21576 PROFESSIONAL ENGINEER
10/1/14

autotroph
architecture.planning.sustainable design consulting

LUISA SENIOR CENTER 1500 LUISA STREET SANTA FE, NM 87504	VILLA CONSUELO SENIOR CENTER 1200 CAMINO CONSUELO STREET SANTA FE, NM 87504
PASATIEMPO SENIOR CENTER 664 ALTA VISTA STREET SANTA FE, NM 87504	

LUISA SENIOR CENTER

MECHANICAL DEMOLITION FLOOR PLAN

Project number	1210
Date	1 OCTOBER 2014
Drawn by	RD
Checked by	KMT,BGS

L-M1.0

LEGEND

SYMBOL	DESCRIPTION
	EXISTING SUPPLY AIR DIFFUSER
	EXISTING RETURN AIR GRILLE
	NEW SUPPLY AIR DIFFUSER
	NEW RETURN AIR GRILLE
	EXISTING SUPPLY AIR DIFFUSER
	EXISTING RETURN AIR GRILLE

GENERAL NOTES:

A. INSTALL ALL EXHAUST EQUIPMENT A MINIMUM OF TEN FEET FROM ALL OUTDOOR AIR INTAKE EQUIPMENT AND OPENINGS.

B. INSTALL ALL EQUIPMENT PER MANUFACTURER'S RECOMMENDATIONAS AND SUGGESTIONS.

C. REFER TO MECHANICAL GENERAL NOTES FOR ADDITIONAL INFORMATION ON INSTALLATION.

D. REINSTALL ALL EXISTING DIFFUSERS IN LOCATION SIMILAR TO THAT SHOWN BUT WITHIN NEW CEILING GRID LAYOUT. REFER TO ARCHITECTURAL SHEETS FOR ADDITIONAL INFORMATION.

KEYED NOTES: ○

1. INSTALL NEW UP-FLOW FURNACE IN CLOSET. RECONNECT NEW FURNACE UNIT TO EXISTING SUPPLY AND RETURN DUCTWORK IN CLOSET.
2. RE-BALANCE EXISTING SUPPLY DIFFUSER TO SHOWN SUPPLY CFM. REFER TO TEST AND BALANCE REQUIREMENTS IN SPECIFICATIONS AND GENERAL NOTES.
3. INSTALL NEW ROOF TOP CONDENSING UNIT AND CONNECT TO NEW INDOOR CLOSET UNIT.
4. INSTALL NEW CEILING MOUNTED EXHAUST FAN WITH CONNECTION TO TEMPERATURE RISE ACTIVATING THERMOSTAT. ROUTE EXHAUST DUCTWORK UP THROUGH ROOF AT EXISTING OPENING. REFER TO DEMOLITION SHEET FOR ADDITIONAL INFORMATION ON LOCATION.
5. EXISTNG INDOOR CASSETTE UNIT TO REMAIN.
6. INSTALL NEW DUCTWORK TRANSITION FOR RETURN AIR DUCTWORK TO BOTTOM CONNECTION OF FURNACE. REFER TO DETAIL FOR ADDITIONAL INFORMATION.
7. CONNECT NEW INDOOR UNIT TO NEW OUTDOOR CONDENSING UNIT. ROUTE REFRIGERANT LINE THROUGH COMMON ROOF PENETRATION INTO CEILING SPACE.
8. NO MECHANICAL WORK IN THIS AREA.
9. REINSTALL EXISTING GRILLES WITH NEW LAY-IN CEILING.
10. PROVIDE EXISTING EVAPORATIVE COOLER WITH NEW PUMP, BELTS, MEDIA, AND ALL WATER PIPING FROM WATER SUPPLY. PERFORM CLEANING OF EXISTING UNIT AND CONFIRM PROPER OPERATION.

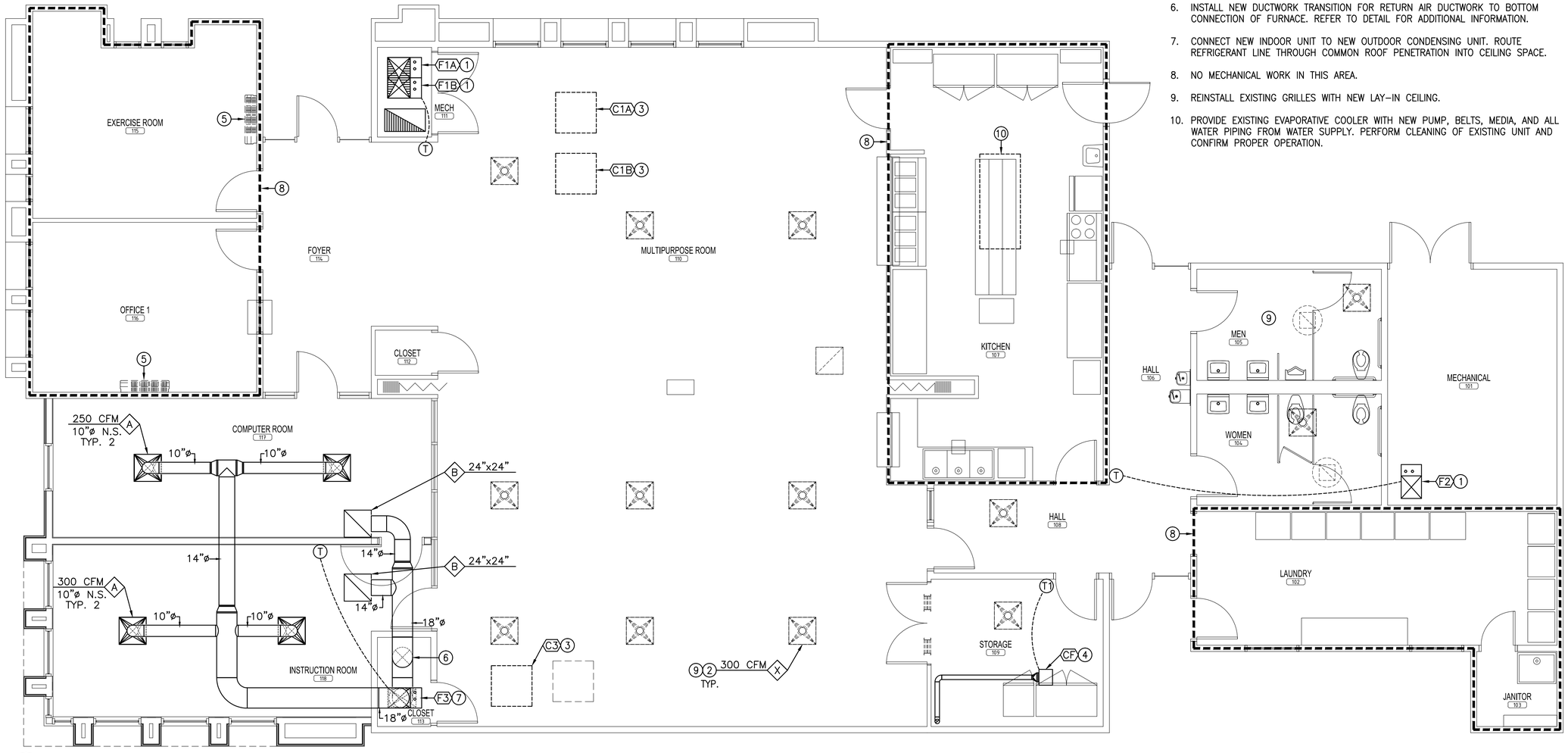

LUISA STREET – MECHANICAL DEMOLITION FLOOR PLAN

SCALE: 1/4" = 1'-0"

MECHANICAL & ELECTRICAL ENGINEERING, INC.
PROJECT #14031

SANTA FE:
1222 Luisa St. Suite B
Santa Fe, New Mexico 87505
505/983-2389

ALBUQUERQUE:
8417 Washington Pl., NE
Albuquerque, NM 87113
505/856-1699

P:	FP:	M:	E:

BYRON G. SMITH
NEW MEXICO
21576
PROFESSIONAL ENGINEER
10/1/14

autotroph
architecture.planning.sustainable design consulting

LUISA SENIOR CENTER 1500 LUISA STREET SANTA FE, NM 87504	VILLA CONSUELO SENIOR CENTER 1200 CAMINO CONSUELO STREET SANTA FE, NM 87504
PASATIEMPO SENIOR CENTER 664 ALTA VISTA STREET SANTA FE, NM 87504	

LUISA SENIOR CENTER

MECHANICAL FLOOR PLAN

Project number	1210
Date	1 OCTOBER 2014
Drawn by	RD
Checked by	KMT,BGS

L-M1.1

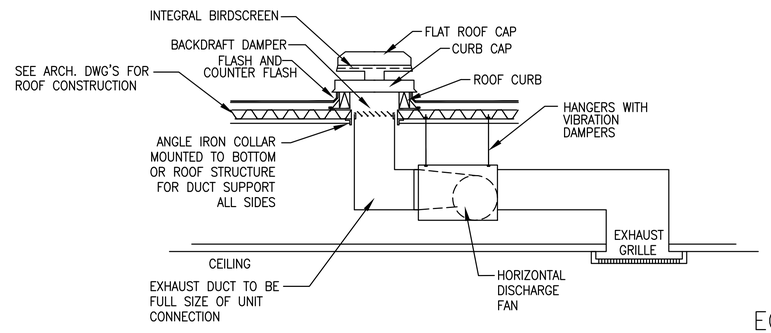

CEILING CABINET FAN DETAIL

NOT TO SCALE

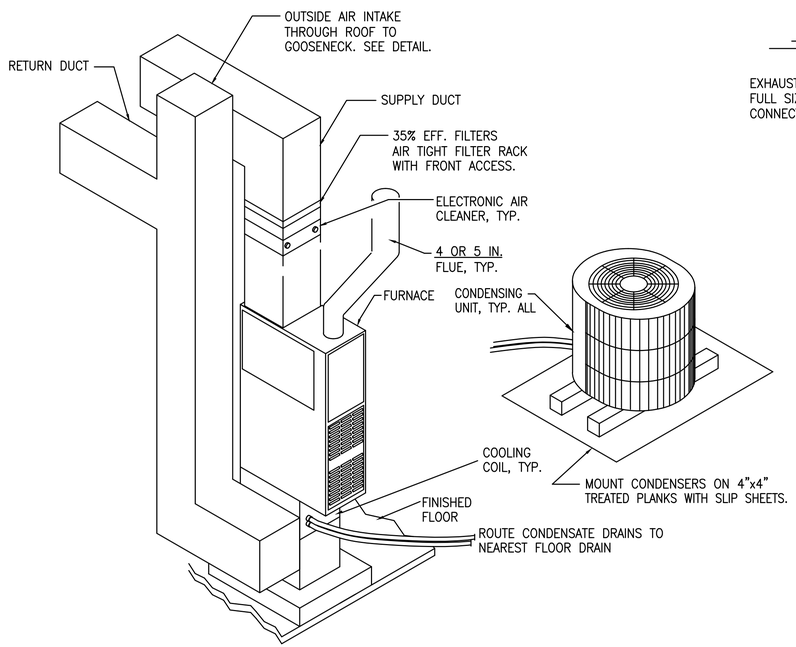

UPFLOW FURNACE AND CONDENSING UNIT DETAIL

NOT TO SCALE

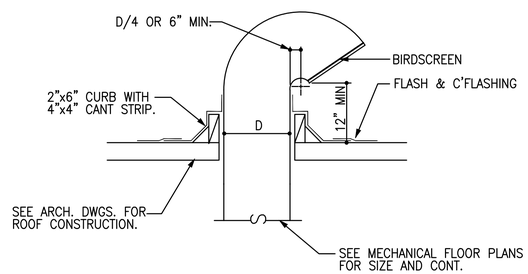

GOOSENECK DETAIL

NOT TO SCALE

ECONOMIZER SEQUENCE OF OPERATIONS:

ECONOMIZER OPERATION SHALL BE DETERMINED BASED ON OUTSIDE AIR TEMPERATURE. ECONOMIZERS SHALL ACTIVATE WHEN OUTSIDE AIR TEMPERATURE IS 65 DEG F (ADJUSTABLE) OR BELOW AND COOLING IS REQUIRED.

NORMAL OPERATION
OUTSIDE AIR DAMPER (D1) SHALL BE MINIMALLY OPEN TO ALLOW REQUIRED OUTSIDE AIR INTO SYSTEM.
RETURN AIR DAMPER (D2) SHALL BE 100% OPEN.

ECONOMIZER OPERATION
OUTSIDE AIR DAMPER (D1) SHALL BE 100% OPEN.
RETURN AIR DAMPER (D2) SHALL BE 100% CLOSED.

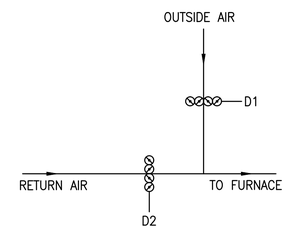

ECONOMIZER DAMPER INSTALLATION

SCALE: NOT TO SCALE

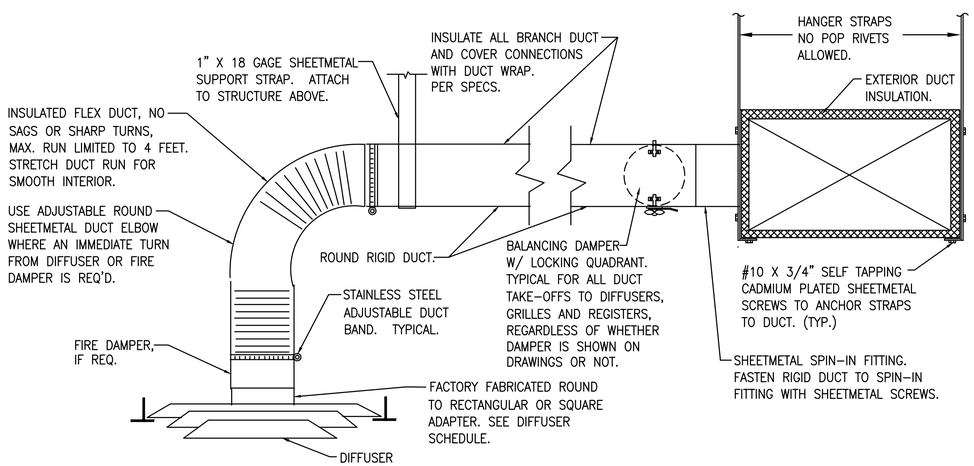

RECTANGULAR DUCTWORK DIFFUSER CONNECTION DETAIL

NOT TO SCALE

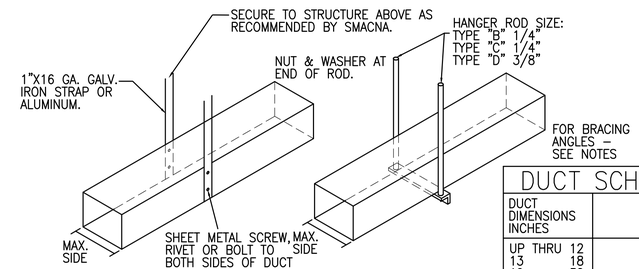

TYPE "A"
8 FT. MAX. HANGER SPACING ALSO PROVIDE 3 HANGERS AT EACH TAKE-OFF OR BRANCH

TYPE "B", "C" & "D"
8 FT. MAX. HANGER SPACING.

DUCT SCHEDULE

DUCT DIMENSIONS INCHES		TYPE HANGER
UP THRU	12	A
13	18	A
19	30	A/B
31	42	B
43	54	B
55	60	B
61	84	C
85	96	C
OVER	96	D

NOTES:

1. FOR SEVERAL DUCTS ON ONE HANGER TYPE "B"–"C" OR "D" MAY BE USED. SIZE OF HANGER WILL BE SELECTED ON THE SUM OF DUCT WIDTHS EQUAL TO MAX. WIDTHOF DUCT SCHEDULE.
2. SCHEDULE FOR ANGLES FOR BRACING: TYPE "B" 1–1/2"X1–1/2"X1/8" ANGLE MAX. SPACING 8'–0" CENTERS; TYPE "C" 1–1/2"X1–1/2"X3/16" ANGLE MAX. SPACING 8'–0" CENTERS; TYPE "D" 2"X2"X1/4" MAX. SPACING 4'–0" CENTERS.

DUCT HANGERS

NOT TO SCALE

MECHANICAL & ELECTRICAL ENGINEERING, INC.
PROJECT #14031
SANTA FE:
1222 Luisa St. Suite B
Santa Fe, New Mexico 87505
505/983-2389
ALBUQUERQUE:
8417 Washington Pl., NE
Albuquerque, NM 87113
505/856-1699
P: FP: M: E:

BYRON G. SMITH
NEW MEXICO
21576
PROFESSIONAL ENGINEER
14D3 10/1/14

autotroph
architecture.planning.sustainable design consulting

LUISA SENIOR CENTER 1500 LUISA STREET SANTA FE, NM 87504	VILLA CONSUELO SENIOR CENTER 1200 CAMINO CONSUELO STREET SANTA FE, NM 87504
PASATIEMPO SENIOR CENTER 664 ALTA VISTA STREET SANTA FE, NM 87504	

LUISA SENIOR CENTER

MECHANICAL DETAILS

Project number	1210
Date	1 OCTOBER 2014
Drawn by	RD
Checked by	KMT,BGS

L-M5.0

2009 INTERNATIONAL ENERGY CODE COMPLIANCE: Commercial					
Design Standards:	ASHRAE 183-2007		ASHRAE 55-2004		
	ASHRAE 90.1-2007		ASHRAE 15-2007		
	ASHRAE 62.1-2007		UMC-2009		
Location:	Santa Fe, NM		Climate Zone:	5B	
Design Temperatures			Set Points		
Season	Dry Bulb	Wet Bulb	Mode	Occupied	Unoccupied
Summer	88°F db	64°F wb	Heating	68°F	60°F
Winter	8°F	N/A	Cooling	72°F	85°F
Section 503: Building Mechanical System (Mandatory & Prescriptive Method)					
Subsection Number & Title	N/A	Notes:			
503.2.1: Energy Calculations		Performed using Trane Trace.			
503.2.2: Equipment and System Sizing		Matched Trane Trace outputs with unit size available.			
503.2.3: HVAC Equipment Performance		F1-3 SEER 13 or greater.			
503.2.4: HVAC System Controls		Single zone programmable thermostats.			
503.2.5: Ventilation		Meet ASHRAE 62.1 as a minimum (F1 with economizer)			
503.2.6: Energy Recovery Ventilation	NA				
503.2.7: Duct Insulation and Sealing	NA				
503.2.8: Pipe Insulation	NA				
503.2.9: HVAC System Completion		T&B and O&M reports required.			
503.2.10: Air System Design and Control		All units have minimum 0.5" WC ESP as required.			
503.2.11: Heating Outside a Building	NA				
503.3: Simple HVAC Systems		Single zone programmable thermostats.			
503.4: Complex HVAC Systems	NA				

MECHANICAL EQUIPMENT SCHEDULE:

F1 – F3, C1 – C3
FORCED AIR FURNACE AND RELATED EQUIPMENT: UP–FLOW WITH BOTTOM RETURN AIR PLENUM, NATURAL GAS FIRED WITH ONE STAGE, INDUCED–COMBUSTION FORCED AIR FURNACE UNIT WITH FAN AND 4 MOTOR SPEEDS, ALUMINIZED STEEL HEAT EXCHANGER. INCLUDE ECONOMIZER CONTROLS FOR EXTERIOR DAMPER ECONOMIZER CONTROL. PROVIDE AND INSTALL MOTOR STARTERS, RELAYS, SWITCHES, 1 INCH DISPOSABLE FILTERS, AND ALL NECESSARY EQUIPMENT FOR COMPLETE AND PROPER OPERATION. ORIFICED FOR OPERATION AT 7200 FT. ASL. INSTALL UNIT ACCORDING TO MANUFACTURER'S RECOMMENDATIONS. UNITS ARE LOCATED APPROXIMATELY 125 LINEAR REFRIGERANT FEET FROM CONDENSER LOCATION (SEE NOTE BELOW). INCLUDE DISCONNECT SWITCH AT UNIT. INCLUDE ALL ASSOCIATED DUCTWORK. INCLUDE ALL NECESSARY EQUIPMENT FOR COMPLETE AND PROPER OPERATION. PROVIDE SMOKE DETECTOR IN SUPPLY AND RETURN AIR DUCT ON UNITS 2000 CFM AND GREATER. CONNECT NEW DUCT SMOKE DETECTORS TO EXISTING "FACP"
ELEC.: 115V/1PH/60HZ
"CARRIER" FURNACE MODEL NO. 58DLA.

SYM	CFM	OA CFM	ESP IN WC	CLNG MBH	"CARRIER" COIL MODEL NO.	OUT HTNG MBH	"CARRIER" FURNACE MODEL NO.	MAX UNIT AMPS
F1A*	3000	460	0.5	41.2	CNPVP4217	142	070–16	9.5
F1B*	*	*	*	*	CNPVP4217	*	070–16	9.5
F2	1200	115	0.5	33.8	CNPVP3617	53	070–12	6.8
F3	2100	525	0.5	56.7	CNPVP6024	105	090–20	13.6

*FURNACE MODELS ARE TWINNED TO ACHIEVE REQUIRED HEATING CAPACITY, COOLING CAPACITY, AND CFM. CAPACITIES SHOWN FOR F1A ARE FOR TWINNED UNIT.

PROVIDE ECONOMIZERS WITH DAMPER CONTROLS FOR F1 AND F3. REFER TO ECONOMIZER DETAIL FOR ADDITIONAL INFORMATION.

SYM	"CARRIER" CONDENSER MODEL NO.	CAP. MBH	MCA	ELEC V/PH/HZ
C1A*	24ABB342A003	42	23.5	208/1/60
C1B*	24ABB342A003	42	23.5	208/1/60
C2	24ABB336A003	36	21.5	208/1/60
C3	24ABB360A003	60	34.2	208/1/60

*F1 WILL BE PROVIDED WITH TWO CONDENSING UNITS, ONE FOR EACH COOLING COIL.

NOTE: CONTRACTOR SHALL SIZE REFRIGERANT LINES FROM THE DX COIL UNIT TO THE CONDENSER ACCORDING TO MANUFACTURER'S RECOMMENDATIONS. PROVIDE ALL FIELD INSTALLED ACCESSORIES FOR THE CONDENSERS TO INCLUDE UNIT DISCONNECT. PROVIDE AND INSTALL ALL REFRIGERANT PIPING, VALVES, FITTINGS, AND INSULATION FOR CORRECT OPERATION.

CF EXHAUSTER: CEILING EXHAUSTER COMPLETE WITH DISCONNECT, BACKDRAFT DAMPER, WALL OR ROOF CAP, SPEED CONTROLLER, MOUNTING BRACKETS, CEILING GRILLE, ROUND DUCT ADAPTOR, AND ALL EQUIPMENT NECESSARY FOR COMPLETE INSTALLATION.
ELEC.: 120V/1PH/60HZ.

SYM	"GREENHECK" MODEL NO.	FAN CFM	ESP	RPM	WATTS	WGHT LBS.	CONTROL
CF	SP–B110	65	0.3	688	100	11	T1

T THERMOSTAT: ADAPTIVE INTELLIGENT RECOVERY, ENERGY SAVING, MULTIPLE SETBACK, TEMPORARY OVERRIDE, LCD DISPLAY, BATTERY BACKUP, TRANSFORMER, COOLING SUBBASE, AUTOMATIC CHANGE OVER FROM WINTER TO SUMMER, AND ALL CONTROLS NECESSARY FOR COMPLETE OPERATION. INCLUDE BATTERIES.
"HONEYWELL" T8600.

T1 LINE VOLTAGE THERMOSTAT: 110 LINE VOLTAGE, CLOSE ON TEMPERATURE RISE, 35 TO 95 DEG. F. TEMPERATURE RANGE. LOCKING COVER SCREW, THERMOMETER, VERTICAL FACEPLATE, WALL PLATE, ADJUSTABLE RANGE STOPS, AND ALL NECESSARY ITEMS FOR COMPLETE INSTALLATION AND OPERATION.
"HONEYWELL" T641A.

DIFFUSER, REGISTER, AND GRILLE SCHEDULE: ◇

A SUPPLY AIR DIFFUSER: 24 IN. X 24 IN. PANEL SIZE, ALUMINUM MATERIAL, SQUARE CEILING MOUNTED SUPPLY AIR DIFFUSER WITH TRUE 360 DEG. PATTERN. INCLUDE DAMPER IN DUCT. COLOR #26 WHITE. DUCT SIZE AS SHOWN ON DRAWINGS.
"TITUS" TMSA–AA.

B RETURN AIR GRILLE: FABRICATED ALUMINUM GRILLE WITH 1/2 IN.X 1/2 IN.X 1/2 IN. SQUARES. INCLUDE FRAME FOR CORRECT CEILING INSTALLATION. COORDINATE WITH ARCHITECTURAL DRAWINGS FOR CEILING APPLICATION. COLOR #26 WHITE. SIZE AS SHOWN ON DRAWINGS.
"TITUS" MODEL 50F.

MECHANICAL / ELECTRICAL RESPONSIBILITY TABLE												
UNIT #	UNIT		DISCONNECT		STARTER/CONTACTOR		CONTROL WIRE		CONTROL CONDUIT		AUTO SHUT-OFF	
	PROVIDED	INSTALLED	PROVIDED	INSTALLED	PROVIDED	INSTALLED	PROVIDED	INSTALLED	PROVIDED	INSTALLED	PROVIDED	INSTALLED
F	MC	MC	MC	EC	MC	MC	CC	CC	EC	EC	N/A	N/A
C	MC	MC	MC	EC	MC	MC	CC	CC	EC	EC	N/A	N/A
CF	MC	MC	N/A	N/A	N/A	N/A	CC	CC	EC	EC	N/A	N/A
T	MC	MC	N/A	N/A	N/A	N/A	CC	CC	EC	EC	N/A	N/A
T1	MC	MC	N/A	N/A	N/A	N/A	CC	CC	EC	EC	N/A	N/A

MC Mechanical Contractor
EC Electrical Contractor
CC Controls Contractor

MECHANICAL & ELECTRICAL ENGINEERING, INC.
PROJECT #14031
SANTA FE:
1222 Luisa St. Suite B
Santa Fe, New Mexico 87505
505/983–2389
ALBUQUERQUE:
8417 Washington Pl., NE
Albuquerque, NM 87113
505/856–1699
P: FP: M: E:

BYRON G. SMITH NEW MEXICO 21576 PROFESSIONAL ENGINEER
14D33 16 1744

autotroph
architecture.planning.sustainable design consulting

LUISA SENIOR CENTER
1500 LUISA STREET
SANTA FE, NM 87504

VILLA CONSUELO SENIOR CENTER
1200 CAMINO CONSUELO STREET
SANTA FE, NM 87504

PASATIEMPO SENIOR CENTER
664 ALTA VISTA STREET
SANTA FE, NM 87504

LUISA SENIOR CENTER

MECHANICAL SCHEDULE

Project number	1210
Date	1 OCTOBER 2014
Drawn by	RD
Checked by	KMT,BGS

L-M6.0

PLUMBING FIXTURE SCHEDULE:

P-1 WATER CLOSET, FLOOR-MOUNT, FLUSH VALVE: WATER SAVING, 1.6 GPF, VITREOUS CHINA WATER CLOSET, WITH TOP SPUD, ELONGATED BOWL, SIPHON-JET FLUSHING ACTION, AND OPEN FRONT PLASTIC SEAT. COMPLETE WITH EXPOSED FLUSH VALVE "AMERICAN STANDARD" MODEL NO. 6047.161.002. AND ALL ACCESSORIES FOR A COMPLETE INSTALLATION.
"AMERICAN STANDARD" MADERA NO. 2234.001
WASTE = 3 IN., VENT = 2 IN., CW = 1-1/2 IN.

P-1A WATER CLOSET, FLOOR-MOUNT, FLUSH VALVE, HANDICAPPED: WATER SAVING, 1.6 GPF, VITREOUS CHINA WATER CLOSET, WITH TOP SPUD, ELONGATED BOWL, SIPHON-JET FLUSHING ACTION, AND OPEN FRONT PLASTIC SEAT. COMPLETE WITH EXPOSED FLUSH VALVE "AMERICAN STANDARD" MODEL NO. 6047.161.002. AND ALL ACCESSORIES FOR A COMPLETE INSTALLATION. INSTALL PER ADA REQUIREMENTS.
"AMERICAN STANDARD" MADERA NO. 3461.001
WASTE = 3 IN., VENT = 2 IN., CW = 1-1/2 IN.

P-2 DRINKING FOUNTAIN, HANDICAPPED: BARRIER-FREE, WALL-MOUNTED, BI LEVEL ONE PIECE STAINLESS STEEL FOUNTAIN WITH SATIN FINISH, COMPLETE WITH WALL STOPS, FRONT PUSH BAR OPERATION, AND ALL ITEMS NECESSARY FOR COMPLETE OPERATION. WALL STOPS SHALL HAVE THREADED INLET AND COMPRESSION OUTLET CONNECTIONS. PROVIDE WALL SUPPORT SYSTEM BY ZURN, NO. Z-1225-BL WITH TOP AND BOTTOM PLATES. INSTALL PER ADA REQUIREMENTS.
ELEC: 120V/1PH/60HZ 15A
"HALSEY-TAYLOR" NO. HACG8BLSS-NF
WASTE = 2 IN., VENT = 1-1/2 IN., CW = 1/2 IN.

GI GREASE INTERCEPTOR: FABRICATED STEEL GREASE INTERCEPTOR. ACID RESISTING RUBBER BASE COATING INSIDE AND OUTSIDE, REMOVABLE BAFFLES, THREADED INLET AND OUTLET, INTERNAL AIR RELIEF, DOUBLE WALL TRAP WITH CLEANOUT, GASKETED SCORIATED COVER AND PDI SEAL OF APPROVAL. 150 GPM FLOWRATE, 300 LBS. GREASE CAPACITY AND 195 GALLON WATER CAPACITY.
"ZURN" NO. Z-1172 SIZE 1200
INLET AND OUTLET = 4 IN.

PLUMBING GENERAL NOTES:

1. COMPLETE ALL WORK IN FULL COMPLIANCE WITH THE U.P.C., U.M.C., I.B.C., LIFE SAFETY CODE, N.F.P.A., ADA, AND ALL LOCAL CODES AND ORDINANCES.

2. THE CONTRACTOR SHALL BE RESPONSIBLE FOR THE COMPLETE LAYOUT AND INSTALLATION OF THE PLUMBING SYSTEMS INCLUDING ALL COORDINATION WITH NEW AND EXISTING SERVICES, MECHANICAL EQUIPMENT, ELECTRICAL EQUIPMENT, CONDUIT, CEILING, AND ANY OTHER EQUIPMENT THAT MAY REQUIRE COORDINATION EFFORTS. THE CONTRACTOR SHALL ALSO BE RESPONSIBLE FOR COORDINATION OF TEMPORARY CUT-OFF OF WATER, SEWER AND NATURAL GAS WITH OWNER AND FOR ALL NECESSARY TRENCHING, BACKFILLING, CUTTING, PATCHING, REPAIRING, ETC., ASSOCIATED WITH THE INSTALLATION OF THE PLUMBING SYSTEM SHOWN ON THE PLANS AND DESCRIBED IN THE SPECIFICATIONS. THE CONTRACTOR IS RESPONSIBLE FOR COORDINATING THE INSTALLATION OF THE FIXTURES WITH THE LOCAL CODE REQUIREMENTS FOR HANDICAP ACCESSIBILITY.

3. NATURAL GAS PIPING SHALL BE SCHEDULE 40 BLACK STEEL ABOVE GRADE AND SHALL BE SCHEDULE 40 BLACK STEEL WRAPPED WITH SCOTCHWRAP OR POLYETHYLENE PIPING WHEN BURIED. PIPING SHALL BE PAINTED WHEN EXPOSED.

4. REFER TO MECHANICAL SCHEDULE FOR MANUFACTURER AND MODEL FOR NATURAL GAS SUPPLY LINE SIZES FOR INDIVIDUAL MECHANICAL EQUIPMENT.

5. ROUTE PIPING AS NEARLY AS POSSIBLE TO THE ROUTING INDICATED ON THE PLANS, BUT MAKE MINOR CHANGES IN ROUTING TO ACCOMMODATE THE CONDITIONS AT THE SITE. DO NOT UNDERTAKE MAJOR REROUTING OF PIPING WITHOUT WRITTEN APPROVAL FROM OWNER OR ENGINEER. BE RESPONSIBLE FOR ALL REQUIRED TRANSITIONS, OFFSETS, MINOR RELOCATIONS, AND ALL ASSOCIATED FITTINGS, PIPING, AND EQUIPMENT TO INSTALL A COMPLETE AND OPERATIONAL SYSTEM.

6. ALL CONTRACTORS BIDDING ON THIS PROJECT ARE CAUTIONED TO VISIT THE SITE AND MAKE ALL NECESSARY INQUIRIES TO DETERMINE THE EXISTING CONDITIONS PRIOR TO SUBMITTING THEIR BIDS. NO SUBSEQUENT ALLOWANCE WILL BE MADE TO COMPENSATE FOR LACK OF PRE-BID INSPECTIONS BY THE SUCCESSFUL CONTRACTOR. ANY LINES ENCOUNTERED WHICH MAY INTERFERE WITH NEW CONSTRUCTION SHALL BE RELOCATED IF ACTIVE AND ABANDONED IF INACTIVE BY THIS CONTRACTOR UNDER THIS CONTRACT BY FIRST CONTACTING THE ARCHITECT FOR A RULING AS TO THEIR REMOVAL, RELOCATION, ETC.

7. INSTALL ISOLATION VALVES AND UNIONS AT ALL BRANCH TAKEOFFS. PROVIDE ACCESS PANELS TO ALL INACCESSIBLE PLUMBING EQUIPMENT TO INCLUDE BUT NOT LIMITED TO VALVES, CONTROL VALVES, ETC.

8. PROVIDE GAS COCKS AND FLEXIBLE CONNECTIONS AT EACH GAS OUTLET FOR MECHANICAL EQUIPMENT.

9. INSTALL CONDENSATE AND OVERFLOW PIPING FROM ALL MECHANICAL EQUIPMENT DRAIN POINTS. EXTEND AND TERMINATE PER UMC/UPC. ALL CONDENSATE AND OVERFLOW PIPING SHALL BE INSULATED PER SPECIFICATIONS FOR APPROPRIATE TEMPERATURE RANGE.

PLUMBING LEGEND

CO	CLEANOUT TO GRADE
DCO	DOUBLE CLEANOUT TO GRADE
	VENT PIPING
VTR	VENT THROUGH ROOF
	COLD WATER PIPING
	HOT WATER PIPING
	HOT WATER RECIRCULATING PIPING
	EXISTING PIPING
ESS	EXISTING SANITARY SEWER PIPING
FD	FLOOR DRAIN
TP	TRAP PRIMER
WHA	WATER HAMMER ARRESTOR
	ROOF DRAIN
	POINT OF CONNECTION
WCO	WALL CLEANOUT
FCO	FINISHED FLOOR CLEANOUT

NOTE: THIS SYMBOLS LEGEND IS A GENERAL REPRESENTATION OF ITEMS USED. SOME PROJECTS MAY NOT UTILIZE ALL SYMBOLS REPRESENTED. COORDINATE ALL SYMBOLS FROM PLANS.

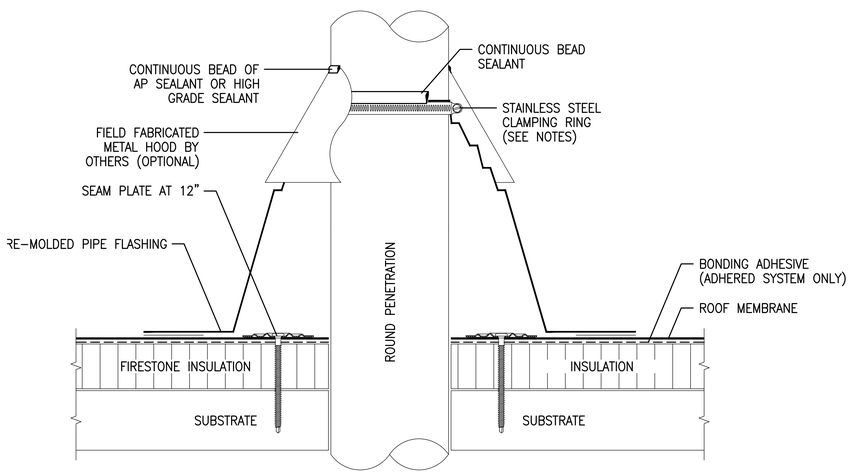

PIPE PENETRATION THRU ROOF MEMBRANE

NOT TO SCALE

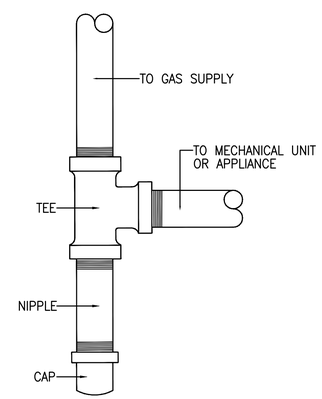

GAS SEDIMENT TRAP DETAIL

NOT TO SCALE

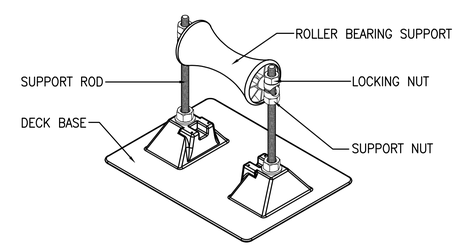

NOTE: PIPING SUPPORTS TO BE INSTALLED EVERY 8'-0"

PIPING SUPPORT DETAIL

NOT TO SCALE

MECHANICAL & ELECTRICAL ENGINEERING, INC.
PROJECT #14031

SANTA FE:
1222 Luisa St. Suite B
Santa Fe, New Mexico 87505
505/983-2389

ALBUQUERQUE:
8417 Washington Pl., NE
Albuquerque, NM 87113
505/856-1699

P: FP: M: E:

BYRON G. SMITH
NEW MEXICO
21576
PROFESSIONAL ENGINEER
14D3 16/14

autotroph
architecture.planning.sustainable design consulting

LUISA
SENIOR CENTER
1500 LUISA STREET
SANTA FE, NM 87504

VILLA CONSUELO
SENIOR CENTER
1200 CAMINO CONSUELO STREET
SANTA FE, NM 87504

PASATIEMPO
SENIOR CENTER
664 ALTA VISTA STREET
SANTA FE, NM 87504

LUISA SENIOR CENTER

PLUMBING LEGEND AND GENERAL NOTES

Project number	1210
Date	1 OCTOBER 2014
Drawn by	
Checked by	KMT,BGS

L-P0.0

KEYED NOTES:

17. TEMPORARILY CAP EXISTING NATURAL GAS SUPPLY PIPING DOWN STREAM OF EXISTING METER AND REGULATOR IN PREPARATION FOR CONNECTION TO NEW NATURAL GAS SUPPLY PIPING.

GENERAL SHEET NOTES:

A. ALL EXISTING NATURAL GAS SUPPLY PIPING LOCATION, SIZE AND PRESSURE TO BE VERIFIED IN FIELD BEFORE WORK BEGINS.

B. ALL CONDENSATE DRAIN PIPING SIZE AND LOCATION TO BE VERIFIED IN FIELD BEFORE WORK BEGINS.

KEYED NOTES:

1. REMOVE EXISTING FURNACE, NATURAL GAS AND CONDENSATE DRAIN PIPING.
2. EXISTING NATURAL GAS SUPPLY PIPING IN MECHANICAL ROOM TO REMAIN.
3. EXISTING UNIT HEATER TO REMAIN.
4. EXISTING NATURAL GAS SUPPLY PIPING ON ROOF TO REMAIN.
5. EXISTING MECHANICAL UNITS TO REMAIN.
6. REMOVE EXISTING LAVATORIES AND STORE. TEMPORARILY CAP WASTE PIPING IN PREPARATION FOR INSTALLATION OF NEW TILE AT WALL. EXISTING LAVATORIES TO BE REINSTALLED AT EXISTING LOCATION. COORDINATE WITH ARCHITECTURAL SHEETS FOR ADDITIONAL INFORMATION.
7. REMOVE EXISTING WATER CLOSETS IN PREPARATION FOR INSTALLATION OF NEW TILE AND NEW WATER CLOSET AT EXISTING LOCATION. TEMPORARILY CAP EXISTING WASTE IN PREPARATION FOR CONNECTION TO NEW UNITS.
8. REMOVE EXISTING COLD WATER SUPPLY TO WATER CLOSETS AND URINALS.
9. EXISTING URINAL TO BE REMOVED AND STORED IN PREPARATION FOR INSTALLATION OF NEW TILE AT WALL.
10. EXISTING SINGLE DRINKING FOUNTAIN TO BE REMOVED IN PREPARATION FOR INSTALLATION OF NEW ADA DRINKING FOUNTAIN AT SAME LOCATION.
11. EXISTING EVAPORATIVE COOLER TO BE REMOVED. REMOVED ALL DOMESTIC WATER SUPPLY PIPING AND DRAIN PIPING COMPLETELY AND PERMANENTLY CAP AT SUPPLY. VERIFY EXISTING DOMESTIC WATER SUPPLY LOCATION IN FIELD BEFORE WORK BEGINS.
12. NOT USED.
13. NOT USED.
14. EXISTING NATURAL GAS SUPPLY PIPING TO BE REMOVED BACK TO EXISTING REGULATOR AT FINISHED GRADE IN PREPARATION FOR INSTALLATION OF NEW NATURAL GAS SUPPLY PIPING.
15. EXISTING MECHANICAL UNIT ON ROOF.
16. NOT USED.

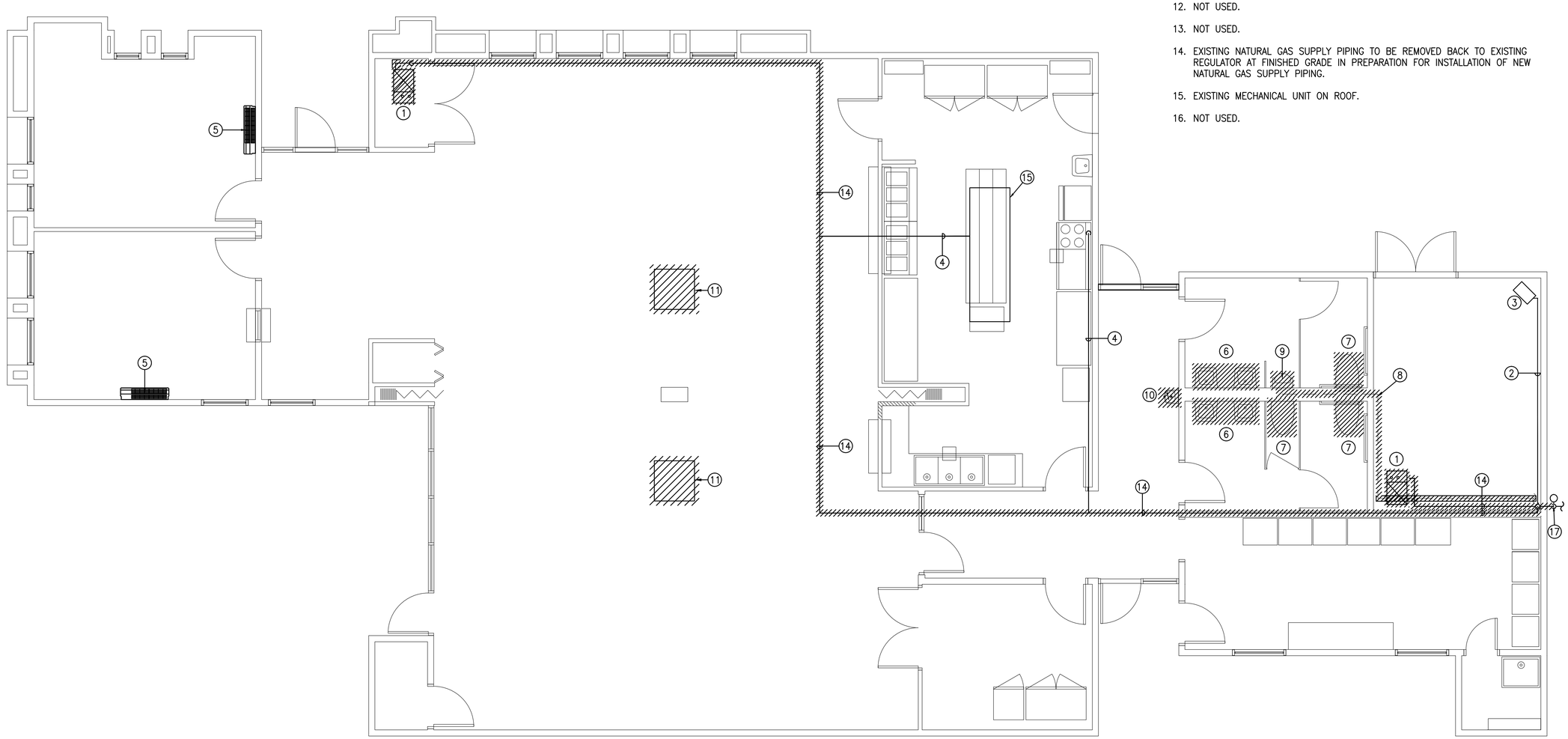

LUISA - PLUMBING DEMOLITION FLOOR PLAN

SCALE: 1/4" = 1'-0"

MECHANICAL & ELECTRICAL ENGINEERING, INC.
PROJECT #14031

SANTA FE:
1222 Luisa St. Suite B
Santa Fe, New Mexico 87505
505/983-2389

ALBUQUERQUE:
8417 Washington Pl., NE
Albuquerque, NM 87113
505/856-1699

P: FP: M: E:

BYRON G. SMITH
NEW MEXICO
21578
PROFESSIONAL ENGINEER
14D3 10/1/14

autotroph
architecture.planning.sustainable design consulting

LUISA SENIOR CENTER 1500 LUISA STREET SANTA FE, NM 87504	VILLA CONSUELO SENIOR CENTER 1200 CAMINO CONSUELO STREET SANTA FE, NM 87504
PASATIEMPO SENIOR CENTER 664 ALTA VISTA STREET SANTA FE, NM 87504	

LUISA SENIOR CENTER

PLUMBING DEMOLITION FLOOR PLAN

Project number	1210
Date	1 OCTOBER 2014
Drawn by	
Checked by	KMT,BGS

L-P1.0

GENERAL SHEET NOTES:

A. RESTROOMS TO HAVE NEW TILE INSTALLED AT ALL WALLS AND FLOOR.

KEYED NOTES: (CONT.)

16. ROUTE AND CONNECT NEW SANITARY WASTE PIPING TO EXISTING SANITARY WASTE PIPING AT THIS LOCATION. VERIFY EXISTING SANITARY WASTE PIPING SIZE, LOCATION AND INVERT IN FIELD BEFORE WORK BEGINS.
17. INSTALL TOILET FLANGE EXTENSION TO ACCOMMODATE NEW TILE THICKNESS. TYPICAL AT ALL TOILETS.
18. EXISTING DISHWASHER TO REMAIN CONNECTED TO EXISTING SANITARY WASTE CONNECTION AS IS. EXISTING DISHWASHER CANNOT BE CONNECTED TO NEW GREASE INTERCEPTOR PIPING PER U.P.C. CODE REQUIREMENTS.
19. NOT USED.
20. ROUTE AND CONNECT NEW NATURAL GAS SUPPLY PIPING TO EXISTING NATURAL GAS SUPPLY PIPING DOWNSTREAM OF EXISTING METER AND REGULATOR.

KEYED NOTES: (CONT.)

8. EXISTING MECHANICAL UNIT TO REMAIN.
9. ROUTE CONDENSATE DRAIN PIPING TO EXISTING FLOOR DRAIN IN MECHANICAL ROOM. VERIFY EXISTING FLOOR DRAIN LOCATION IN FIELD BEFORE WORK BEGINS.
10. ROUTE CONDENSATE DRAIN PIPING FOR NEW MECHANICAL EQUIPMENT TO DAYLIGHT PER U.P.C. CODE REQUIREMENTS.
11. ROUTE NEW COLD WATER SUPPLY FROM MECHANICAL ROOM TO CONNECT TO EXISTING RESTROOM SUPPLY.
12. INSTALL WASTE PIPING AT INLET OF NEW GREASE INTERCEPTOR (GI) AS SHOWN. CAP WASTE PIPING IN PREPARATION FOR FUTURE CONNECTION.
13. INSTALL CONDENSATE PUMP "LITTLE GIANT" MODEL NO. EC-400 FOR EXISTING MECHANICAL UNIT AT THIS LOCATION.
14. NOT USED.
15. NOT USED.

KEYED NOTES:

1. EXISTING MECHANICAL UNIT TO REMAIN.
2. EXISTING NATURAL GAS SUPPLY PIPING IN MECHANICAL ROOM TO REMAIN.
3. ROUTE AND CONNECT NEW NATURAL GAS SUPPLY PIPING IN MECHANICAL ROOM TO EXISTING NATURAL GAS SUPPLY PIPING AT THIS LOCATION.
4. EXISTING NATURAL GAS SUPPLY PIPING ON ROOF TO REMAIN.
5. ROUTE AND CONNECT NEW NATURAL GAS SUPPLY PIPING TO EXISTING NATURAL GAS SUPPLY PIPING AT THIS LOCATION.
6. ROUTE NEW NATURAL GAS SUPPLY PIPING ON ROOF AND DOWN BELOW ROOF STRUCTURE TO NEW MECHANICAL UNIT AS SHOWN.
7. INSTALL NEW ROOF TOP PIPING SUPPORTS EVERY 8'-0" AT ALL NATURAL GAS SUPPLY PIPING ON ROOF.

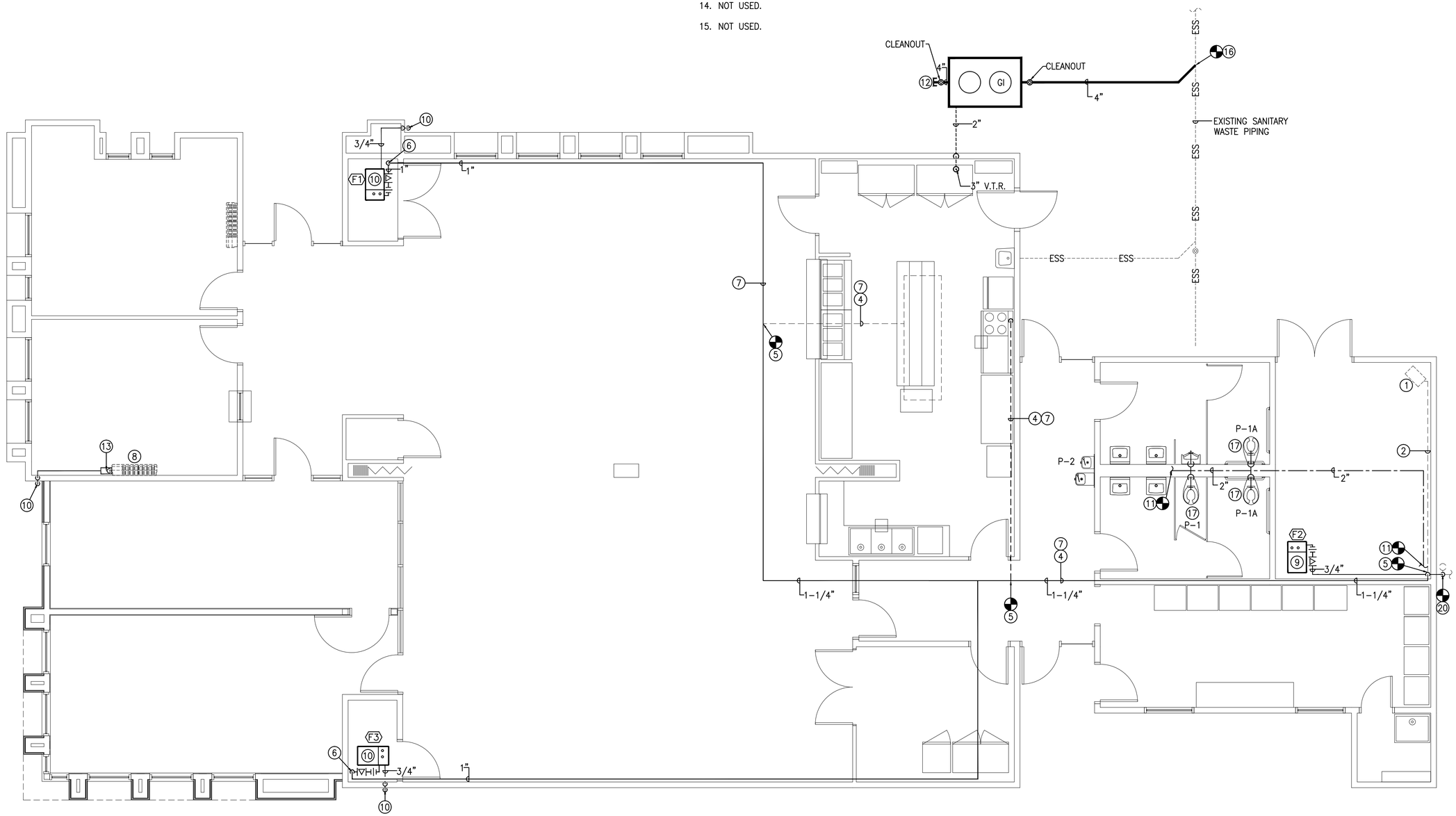

LUISA - PLUMBING FLOOR PLAN

SCALE: 1/4" = 1'-0"

MECHANICAL & ELECTRICAL ENGINEERING, INC.
PROJECT #14031

SANTA FE:
1222 Luisa St. Suite B
Santa Fe, New Mexico 87505
505/983-2389

ALBUQUERQUE:
8417 Washington Pl., NE
Albuquerque, NM 87113
505/856-1699

P:	FP:	M:	E:

BYRON G. SMITH
NEW MEXICO
21576
PROFESSIONAL ENGINEER
14D31 10/1/14

autotroph
architecture.planning.sustainable design consulting

LUISA SENIOR CENTER 1500 LUISA STREET SANTA FE, NM 87504	VILLA CONSUELO SENIOR CENTER 1200 CAMINO CONSUELO STREET SANTA FE, NM 87504
PASATIEMPO SENIOR CENTER 664 ALTA VISTA STREET SANTA FE, NM 87504	

LUISA SENIOR CENTER

PLUMBING FLOOR PLAN

Project number	1210
Date	1 OCTOBER 2014
Drawn by	RD
Checked by	KMT,BGS

L-P1.1

ELECTRICAL SYMBOLS LEGEND

LIGHTING

SYMBOL	DESCRIPTION
	LIGHT (SEE LIGHT FIXTURE SCHEDULE)
	EMERGENCY LIGHT
	STRIP LIGHT
	WALL MOUNTED
	UNDER CABINET
	LIGHTING TRACK
	OUTDOOR POLE MOUNTED
	CEILING SURFACE MOUNTED
	RECESSED DOWNLIGHT
	WALL MOUNTED DOWNLIGHT
	EMERGENCY EXIT
	EMERGENCY EGRESS, 90" AFF
	CEILING FAN
$	SINGLE POLE SWITCH, 42" AFF
3$	THREE WAY SWITCH, 42" AFF
4$	FOUR WAY SWITCH, 40" AFF
WP$	WEATHER PROOF SWITCH, 42" AFF
D$	DIMMER SWITCH, 42" AFF
M$	MOTOR SWITCH, 42" AFF
	PUSH BUTTON SWITCH
TS	TIME SWITCH
LC	LIGHTING CONTACTOR
PC	PHOTO CELL
OS	OCCUPANCY SENSOR
	EXISTING DEVICE SHOWN DASHED

NOTE: THIS SYMBOLS LEGEND IS A GENERAL REPRESENTATION OF DEVICES USED. SOME PROJECTS MAY NOT UTILIZE ALL SYMBOLS REPRESENTED. COORDINATE ALL SYMBOLS FROM PLANS.

POWER

SYMBOL	DESCRIPTION
	DUPLEX RECEPTACLE, 18" AFF
	FOURPLEX RECEPTACLE, 18" AFF
	250V RECEPTACLE, 18" AFF
	DUPLEX RECEPT., 1/2 SWITCH, 18" AFF
GFI	GND FLT INTERRUPT RECEPT., 18" AFF
WP	WEATHER PROOF RECEPTACLE, 18" AFF
	SPECIAL RECEPTACLE
	SINGLE SPECIAL
	DUPLEX SPECIAL
	SIMPLEX RECEPTACLE
	CEILING MOUNTED DUPLEX RECEPTACLE
	FLOOR MOUNTED DUPLEX RECEPTACLE
	CLOCK OUTLET
	SURFACE MOUNTED PLUG RACEWAY
	DISCONNECT SWITCH
T$	THERMAL OVERLOAD SWITCH
	MOTOR OR EXHAUST FAN
P B	PULL BOX
J	CEILING MOUNTED JUNCTION BOX
J	WALL MOUNTED JUNCTION BOX
J	DROP CORD
T	THERMOSTAT OUTLET BOX
	ELECTRICAL PANEL, SURFACE MOUNTED
	ELECTRICAL PANEL, RECESSED MOUNTED
T	PAD MOUNT TRANSFORMER
T	WALL MOUNT TRANSFORMER
	ELECTRICAL KEYED NOTE
	EQUIPMENT SYMBOL
	CONDUIT LEADER LINE FOR SIZES
	BRANCH CIRCUIT HOMERUN
	GROUND
	GROUND ROD
	LIGHTNING ARRESTOR

SPECIAL SYSTEMS

SYMBOL	DESCRIPTION
F	FIRE ALARM PULL BOX, 42" AFF
F	FIRE ALARM STROBE, 90" AFF
F	FIRE ALARM HORN/STROBE, 90" AFF
MDH	FA MAGNETIC DOOR HOLDER
FS	FA FIRE/SMOKE DAMPER
RI	FA REMOTE INDICATOR
FS	FLOW SWITCH
TS	TAMPER SWITCH
	HEAT DETECTOR
	SMOKE DETECTOR
	CEILING SPEAKER
	WALL MOUNTED SPEAKER, 90" AFF
V $	SPEAKER VOLUME CONTROL, 42" AFF
	TELEVISION OUTLET
	SECURITY DIGITAL KEY PAD
	SECURITY INFRARED MOTION SENSOR
D	SECURITY DOOR CONTACTS
	SECURITY CAMERA
	COMMUNICATIONS/DATA OUTLET
	COMMUNICATIONS/DATA OUTLET, IN FLOOR
	TELEPHONE OUTLET
	TELEPHONE OUTLET, IN FLOOR
$	PA CALL SWITCH
	BUZZER
	BELL
M	MICROPHONE, WALL MOUNTED
M	MICROPHONE, FLOOR MOUNTED
	TELEPHONE BACKBOARD
	PANIC BUTTON
	CARD READER
AD	AUTO DIALER
	WIRELESS MICROPHONE TRANSMITTER
	AUDIO MICROPHONE INPUT

PANELBOARD GENERAL NOTES:

A. PANELBOARDS SHALL HAVE, BOLT–IN BREAKERS, AND DOOR–IN–DOOR CONSTRUCTION. ALL SURFACE MOUNTED PANELS IN ANY FINISHED AREAS SHALL BE PROVIDED WITH SKIRTS FLOOR–TO–CEILING (FIELD VERIFY DIMENSIONS), AND ELSEWHERE AS NOTED ON THE PLANS.

B. PANELBOARDS SHALL HAVE TYPED CIRCUIT DIRECTORIES, PLACED BEHIND CLEAR PLASTIC PROTECTIVE COVER. DESIGNATIONS ON DIRECTORY SHALL BE MORE DESCRIPTIVE THAN AS SHOWN ON THE DRAWING PANEL SCHEDULES. "SPARES" AND "SPACES" SHALL BE INDICATED ON DIRECTORY WITH ERASABLE PENCIL (NOT TYPED).

C. PANELBOARDS SHALL BE PROVIDED WITH NAMEPLATES SECURED TO EQUIPMENT WITH STEEL SCREWS. NAMEPLATES SHALL BE LAMINATED PLASTIC WITH ENGRAVED 3/4" MIN. WHITE LETTERS ON BLACK BACKGROUND AND SHALL INDICATE PANEL DESIGNATION, VOLTAGE, PHASE, AND AMPACITY AND LOCATION OF OVERCURRENT PROTECTIVE DEVICE FEEDING PANEL.

D. PANELBOARDS SHALL BE PROVIDED WITH GROUND BUS/GROUND STRIP MOUNTED ON A CLEAN SURFACE OF THE PANELBOARD CAN. GROUND CONDUCTOR SHALL BE PROVIDED TO THE PANELBOARD GROUND BUS FROM THE GROUND SYSTEM IN THE SERVICE ENTRANCE SECTION OF DISTRIBUTION SECTION.

E. PANELBOARDS SHALL HAVE FACTORY FURNISHED CIRCUIT BREAKER NUMBERING. PUNCHED TAPE OR MARKERS WILL NOT BE PERMITTED. BRANCH CIRCUIT BREAKER NUMBER ON PANELBOARDS SHALL MATCH NUMBERING AS SHOWN ON THE PLANS.

F. BRANCH CIRCUIT CONDUCTORS EXTENDING FROM PANELBOARDS TO RESPECTIVE DEVICES SHALL BE COLOR CODED AND SHALL BE INSTALLED CONTINUOUS IN EACH RUN AND SHALL HAVE A TAG DESIGNATING THE BRANCH CIRCUIT NUMBERS LOCATED AT ALL JUNCTION BOXES. THE COLOR CODE SCHEME SHALL BE AS FOLLOWS:

- FOR 120/240V: PHASE A – BLACK, PHASE B –RED,
  NEUTRAL – WHITE, EQUIPMENT GROUND – GREEN

G. PER NEC, ALL BRANCH CIRCUIT PANELBOARDS SHALL BE PROVIDED WITH GFI AND AFCI CIRCUIT BREAKERS FOR APPROPRIATE CIRCUITS. TWO AND THREE POLE CIRCUIT

- BREAKERS SHALL BE PROVIDED FOR MULTIWIRE BRANCH CIRCUITS.
- USE "HACR" BREAKERS FOR HEATING/AIR CONDITIONING LOADS AND "SWD" BREAKERS FOR LIGHTING CIRCUITS.

H. PROVIDE PANELS WITH LUGS/CONNECTIONS SIZED FOR FEEDERS SPECIFIED. FEEDERS MAYBE OVERSIZED PER NEC FOR DERATING FACTORS. COORDINATE FEEDER SIZES WITH EQUIPMENT SUPPLIER PRIOR TO ORDERING.

MECHANICAL GENERAL NOTES:

A. COORDINATE AND PROVIDE ALL POWER NECESSARY FOR MECHANICAL EQUIPMENT AS INDICATED ON THE MECHANICAL AND PLUMBING DRAWINGS.

B. CEILING MOUNTED J_BOXES, DEVICES, AND EQUIPMENT SHOWN FOR SCHEMATIC PURPOSES ONLY. CONTRACTOR SHALL COORDINATE EXACT PLACEMENT OF CEILING MOUNTED EQUIPMENT WITH ALL TRADES WORK IN FIELD WITH CONSIDERATION OF FIELD CONDITIONS TO AVOID CONFLICTS. LOCATION OF ALL DEVICES SHALL BE COORDINATED ARCHITECTURAL DRAWINGS PRIOR TO ROUGH–IN.

C. REFER TO THE CONTROL DIAGRAMS AND RESPONSIBILITY TABLES SHOWN ON THE MECHANICAL DRAWINGS FOR EQUIPMENT AND WIRING TO BE FURNISHED AND INSTALLED BY DIVISION 16 CONTRACTOR. ADDITIONAL COMPENSATION FOR CONTROL AND INTERLOCK WIRING, CONTROL COMPONENTS, AND LACK OF COORDINATION BETWEEN MECHANICAL AND ELECTRICAL WILL NOT BE ALLOWED UNDER ANY CIRCUMSTANCE. THE CONTRACTOR SHALL BE RESPONSIBLE FOR A COMPLETE AND OPERATIONAL MECHANICAL/ELECTRICAL SYSTEM.

D. REFER TO MECHANICAL PLANS FOR EXACT LOCATION OF ALL MECHANICAL EQUIPMENT AND ELECTRICAL CHARACTERISTICS. VERIFY EQUIPMENT LOCATIONS WITH MECHANICAL PRIOR TO ROUGH–IN.

E. AT ALL ACCESS DOOR LOCATIONS FOR MECHANICAL AND ELECTRICAL EQUIPMENT IN HARD CEILING AREAS, PROVIDE A SINGLE POLE SWITCH, DUPLEX RECEPTACLE AND KEYLESS PORCELAIN SOCKET WITH 1–A19/IF, 100 WATT LAMP AND WIRE GUARD PER NEC REQUIREMENTS. COORDINATE WITH MECHANICAL.

F. ALL CONDUIT SHALL BE CONCEALED IN WALLS AND ABOVE CEILINGS. EXPOSED CONDUIT AND CONDUIT INSTALLED ON THE ROOF WILL NOT BE APPROVED UNDER ANY CIRCUMSTANCE.

G. MOUNT DISCONNECT SWITCH IN CONVENIENT LOCATION AT UNIT, PER NEC. COORDINATE LOCATION OF CONTROLS WITH MECHANICAL PRIOR TO CONDUIT ROUGH–IN. PROVIDE DISCONNECT SWITCH WITH EQUIPMENT GROUND BUS AND TERMINATE ALL EQUIPMENT GROUNDING CONDUCTORS AT DISCONNECT SWITCH EQUIPMENT GROUND BUS (DO NOT USE SCREW OR SINGLE LUG FOR EQUIPMENT GROUND CONNECTION). PROVIDE WEATHER_TIGHT FLEXIBLE CONDUIT CONNECTION FROM DISCONNECT SWITCH TO UNIT (NO EXCEPTIONS). ALL CONDUIT SHALL BE CONCEALED AS MUCH AS POSSIBLE FROM THE DISCONNECT SWITCH TO THE PANEL INDICATED. DISCONNECT SWITCH SHALL BE PROVIDED WITH ENGRAVED MICARTA NAMEPLATE INDICATING PANEL AND BRANCH CIRCUIT CONNECTED TO. COORDINATE MOTOR HORSEPOWER OF UNIT, VOLTAGE AND PHASE FOR SERVICE PROVIDED WITH MECHANICAL TO AVOID CONFLICTS IN THE FIELD.

DEMOLITION NOTES:

THESE NOTES SHALL APPLY TO DEMOLITION AREAS, RENOVATED NEW WORK AREAS AND ENTIRE PROJECT.

A. BECOME FAMILIAR WITH THE EXISTING CONDITIONS PRIOR SUBMITTING A COMPLETE PRICE WITHIN THE SCOPE OF THE PLANS AND SPECIFICATIONS. VERIFY THE EXTENT OF DEMOLITION AND REMOVALS PRIOR TO PRICING. INCLUDE ALL WORK REQUIRED TO COMPLETELY DISCONNECT ASSOCIATED EQUIPMENT AND TO COMPLETELY REMOVE ALL ASSOCIATED BRANCH CIRCUIT WIRING, WHERE REQUIRED. WHEN UNCLEAR, ANY QUESTIONS ARISING DURING THE PRICING PERIOD IN REGARD TO THE EXTENT OF WORK OR ANY OTHER ISSUE RELATING TO THIS PROJECT SHALL BE BROUGHT TO THE ATTENTION OF THE ENGINEER, NOT AFTER THE PROJECT HAS BEEN AWARDED. PRIOR TO THE CONCLUSION OF THE ADDENDUM PERIOD IN THE PRICING TIME FRAME, WITHOUT ANY CLARIFICATION BEYOND THESE AND THE PRICING DOCUMENTS, THE SUBMITTAL OF A PRICING WARRANTS THAT THE BIDDER FULLY UNDERSTANDS THE SCOPE.

B. REMOVE ALL EXISTING MATERIAL AND EQUIPMENT INDICATED AND SALVAGE TO THE OWNER. THE OWNER SHALL HAVE FIRST RIGHT OF REFUSAL ON ELECTRICAL EQUIPMENT TO BE REMOVED. ALL EQUIPMENT REMOVED, NOT CLAIMED BY THE OWNER, SHALL BECOME THE PROPERTY OF THE CONTRACTOR AND BE PROPERLY DISPOSED OF. ALL EQUIPMENT THAT HAS BEEN REMOVED TO BE DISPOSED OF IN A APPROVED MANNER PER THE LOCAL AUTHORITY HAVING JURISDICTION.

C. DAMAGE TO WALLS, CEILING, FLOOR, ETC. SHALL BE REPAIRED IN A PROFESSIONAL MANNER WITH MATCHING FINISH MATERIAL. SEAL ALL WALL AND CEILING, ROOF, AND FOUNDATION OPENINGS.

D. THE LOCATIONS OF EQUIPMENT SHOWN ON THE DRAWINGS IS BASED ON SITE VISITS AND THE BEST AVAILABLE INFORMATION AT THE TIME OF DESIGN. SOME DISCREPANCIES MAY EXIST. NOT ALL BUILDING DETAILS AND BRANCH CIRCUIT CONDUIT/WIRING TO BE REMOVED ARE MAY NOT ALL BE SHOWN ON THE PLANS. VERIFY THE EXACT LOCATIONS OF EQUIPMENT TO BE REMOVED IN THE FIELD. THE CONTRACTOR MAY REVIEW EXISTING ELECTRICAL, MECHANICAL, AND ARCHITECTURAL PLANS, THAT ARE AVAILABLE AFTER PRICING IS AWARDED.

E. DURING DEMOLITION OR WHEN ELECTRICAL SYSTEMS ARE BEING MODIFIED, COVER AND SEAL AND PROTECT EXISTING EQUIPMENT NOT BEING REMOVED FROM DAMAGE. THIS APPLIES TO ALL NEW EQUIPMENT AND SYSTEMS WHICH WILL CONTINUE TO BE OPERATED AT COMPLETION OF THE WORK.

F. COORDINATE DEMOLITION FOR EXISTING ELECTRICAL EQUIPMENT BEING REMOVED. ALL ELECTRICAL EQUIPMENT DOWNSTREAM, WHICH REMAINS, AND OUT OF THE DEMOLITION AREA, SHALL REMAIN "ON" AT ALL TIMES. MAINTAIN THE EXISTING CIRCUIT CONTINUITY FOR ALL REMAINING ELECTRICAL DEVICES. COORDINATE GENERAL DEMOLITION WITH THE OWNER TO AVOID PROBLEMS WITH CIRCUIT BEING DISCONNECTED AND REMOVED WHICH MAY AFFECT OTHER AREAS OUTSIDE OF THE WORK AREA. COORDINATE IN FIELD.

G. SURVEY SPACES ABOVE CEILING FOR DEFICIENT EXISTING ELECTRICAL EQUIPMENT. THIS REMEDIAL ABOVE CEILING WORK MAY INCLUDE PROVIDING ADEQUATE CONDUIT SUPPORTS, REPLACING CODE DEFICIENT FLEXIBLE ELECTRICAL POWER CABLE, PROVIDING MISSING JUNCTION BOX COVERS, REPAIRING BROKEN OR SEPARATED CONDUIT, AND PROVIDING EXTENSION RINGS FOR OVER–CROWDED JUNCTION BOXES. ALL THIS WORK SHALL BE INCLUDED IN THE PRICE.

H. RESOLVE DEFICIENT SPECIAL SYSTEMS CABLE RELATED WORK IN EXPOSED CEILING AREAS. THIS MAY INCLUDE ITEMS SUCH AS SUPPORT OF EXISTING CABLE AND REPLACEMENT OF CABLE WITH NEW PLENUM RATED AND CODE COMPLIANT CABLE. ALL THIS WORK SHALL BE INCLUDED IN THE PRICE.

I. PROVIDE DISCONNECTION AND RECONNECTION OF BRANCH CIRCUITS AND REPLACEMENT OF ELECTRICAL MATERIALS AND LABOR TO RESTORE COMPLETE AND OPERATIONAL SYSTEMS. THIS INCLUDES THE CORRECTION OF ANY CODE DEFICIENCIES RELATED TO RENOVATIONS ON THIS PROJECT. ALL THIS WORK SHALL BE INCLUDED IN THE BID PRICE.

J. WHEN THE EXTENT OF REMOVAL IS UNCLEAR, REQUEST CLARIFICATION FROM ENGINEER PRIOR TO COMMENCING WORK.

K. ADDITIONAL DEMOLITION MAY BE REQUIRED TO COMPLETE THE WORK AS INDICATED ON THE DRAWINGS. DEMOLITION REQUIRED TO COMPLETE THE PROJECT WORK, BUT NOT INDICATED, SHALL BE INCLUDED IN THE CONTRACT SUM.

LIGHTING GENERAL NOTES:

A. COORDINATE THE EXACT LOCATIONS OF ALL CEILING MOUNTED LIGHT FIXTURES WITH THE ARCHITECTURAL REFLECTED CEILING PLAN AND ALL OTHER TRADES WORK. NOTIFY ARCHITECT AND ENGINEER IMMEDIATELY FOR CONFLICTS OF LOCATIONS.

B. EMERGENCY LIGHT FIXTURES SHALL BE MOUNTED MAXIMUM 10'–0" AFF.

GENERAL NOTES:

A. THE ELECTRICAL CONTRACTOR SHALL BE RESPONSIBLE FOR COORDINATING AND PROVIDING ALL WORK INDICATED BY THESE DRAWINGS. THIS CONSISTS OF FURNISHING ALL LABOR, EQUIPMENT, SUPPLIES AND MATERIALS IN ADDITION TO PERFORMING ALL OPERATIONS INCLUDING CUTTING, CHANNELING AND UNDERGROUND TRENCHING NECESSARY FOR THE INSTALLATION OF COMPLETE POWER, LIGHTING , OR OTHER SYSTEMS AS SHOWN.

B. PERFORM ALL ELECTRICAL WORK IN A NEAT AND WORKMANLIKE MANNER IN FULL COMPLIANCE WITH ALL APPLICABLE CODES AND THE NATIONAL ELECTRICAL CODE (NEC). ALL LOCAL AND STATE REQUIREMENTS WILL BE OBSERVED DURING THE PERFORMANCE OF THIS WORK.

C. SHOULD THE CONTRACTOR DETECT ANY DISCREPANCIES BETWEEN CONTRACT DOCUMENTS AND LEGAL OR SAFETY REQUIREMENTS FOR THE PROJECT, HE SHALL PROMPTLY NOTIFY THE ENGINEER IN WRITING. ONCE NOTIFIED THE ENGINEER SHALL MODIFY THE CONTRACT DOCUMENTS ACCORDINGLY. IF THE CONTRACTOR PROCEEDS WITH ANY WORK WHICH IS IN VARIANCE OF KNOWN LEGAL OR SAFETY REQUIREMENTS, THE CONTRACTOR SHALL ASSUME RESPONSIBILITY FOR THIS WORK AND SHALL PROMPTLY CORRECT THE WORK WHEN NOTIFIED WITHOUT ADDITIONAL COST TO THE OWNER.

D. FIELD VERIFY EXISTING CONDITIONS PRIOR TO COMMENCING WORK. NOTIFY THE ENGINEER OF ANY DISCREPANCIES BEFORE PROCEEDING WITH DEMOLITION. NO CLAIM FOR ADDITIONAL COST OR TIME EXTENSION WILL BE ALLOWED WITHOUT PROPER NOTICE PLUS PRIOR DETERMINATION OF TIME AND COST TO THE OWNER.

E. ANY DAMAGE ON THE CONSTRUCTION SITE CAUSED BY THE CONTRACTOR OR A PARTY TO THE CONTRACTOR SHALL BE REPAIRED PRIOR TO CONTRACT DATE OF SUBSTANTIAL COMPLETION AT NO ADDITIONAL EXPENSE TO THE OWNER.

F. EXTEND ALL CONDUIT AND CONDUCTORS, INSTALL ELECTRICAL EQUIPMENT AS NECESSARY, AND MAKE ALL FINAL CONNECTIONS TO MECHANICAL AND OWNER FURNISHED EQUIPMENT. LEAVE ALL EQUIPMENT IN OPERABLE CONDITION WITH APPROPRIATE OVERLOAD AND SERVICE DISCONNECT PROTECTION AS REQUIRED BY THE APPLICABLE CODES. FOLLOW MANUFACTURER INSTALLATION GUIDELINES WHERE APPLICABLE.

G. ALL CONDUCTORS SHALL BE COPPER, RATED FOR 600 VOLTS WITH TYPE THHN/THWN, 90 DEGREE INSULATION UNLESS OTHERWISE INDICATED. CONDUCTORS SHALL BE SOLID FOR #12 AWG AND STRANDED FOR #10 AWG OR LARGER. ALL WIRING SHALL BE RUN IN CONDUIT.

H. GENERALLY, CONDUIT SHALL BE EMT, 3/4 INCH MINIMUM. WHERE REQUIRED TO PROTECT FROM PHYSICAL DAMAGE, CONDUIT SHALL BE RIGID OR IMC TYPE. RUN CONDUIT CONCEALED UNLESS OTHERWISE SHOWN ON THE DRAWINGS. USE FLEXIBLE METALLIC CONDUIT OR SURFACE MOUNTED RACEWAY ONLY WHERE INDICATED. PROVIDE EXPANSION FITTINGS FOR CONDUIT CROSSING EXPANSION JOINTS.

I. SUPPORT ALL CONDUIT INDEPENDENTLY FROM THE BUILDING STRUCTURE. DO NOT SUPPORT FROM VENTILATION DUCTS, MECHANICAL PIPING, SUSPENDED CEILING GRIDS, OR THEIR HANGERS. USE ACCEPTABLE METHODS OF SUPPORT.

J. PROVIDE WIRING DEVICES RATED FOR THE GIVEN APPLICATION AS REQUIRED BY CODE. SPECIAL DEVICES SHALL BE PROVIDED AS INDICATED.

K. MAKE MAIN FEEDER CONNECTIONS WITH SOLDERLESS, BOLTED TYPE CONNECTORS AND MAKE SMALLER WIRE SPLICES WITH PRESSURE TYPE CONNECTORS.

L. INSTALL EXTERIOR WIRING AND DEVICES IN CONDUIT WITH WEATHERPROOF FITTINGS AND IN WEATHERPROOF BOXES. EQUIPMENT SHALL BE RATED FOR EXTERIOR USE.

M. SIZE ALL BOXES AND ENCLOSURES PER THE NEC. PROVIDE WORKING SPACE FOR ELECTRICAL INSTALLATIONS IN ACCORDANCE WITH NEC, ARTICLE 110.

N. MAINTAIN A MINIMUM OF 24 INCH SEPARATION BETWEEN POWER CONDUITS AND SIGNAL CONDUITS AS PRACTICAL. ROUTE CONDUITS TO NOT CROSS EACH OTHER.

O. AFTER COMPLETION OF THE INSTALLATION, THE ENTIRE SYSTEM SHALL BE THOROUGHLY CLEANED. REMOVE ALL FOREIGN MATTER, PAINT, OIL, DIRT, GREASE, UNNEEDED LABELS OR STICKERS FROM FIXTURES AND EQUIPMENT. REMOVE ALL RUBBISH AND DEBRIS ACCUMULATED DURING INSTALLATION FROM THE PREMISES.

P. NEW WORK DEVICES SHALL BE FLUSH IN WALLS CONDUIT/WIRING SHALL BE CONCEALED. ROUTING OF FEEDERS AND MATERIALS USED FOR DEVICES IN WALLS SHALL BE APPROVED BY ARCHITECT AND ENGINEER PRIOR TO ROUGH IN. REPAIR AND GROUT AROUND NEW J–BOXES AND FINISH AS NECESSARY TO MATCH FINISH. COORDINATE WITH ARCHITECT IN FIELD PRIOR TO ROUGH–IN TO AVOID CONFLICTS.

Q. COORDINATE FINAL LOCATION OF ALL CONDUIT/FEEDERS, PANELS, AND CONTROL PANELS WITH ENGINEER, OWNER, ARCHITECT, AND ALL TRADES PRIOR TO BEGINNING ANY ROUGH–IN WORK. PROVIDE WORKING CLEARANCES PER NEC. COORDINATE ROUTING OF FEEDERS WITHIN WALL CAVITIES OR CHASES. VERIFY CONDUIT ROUTING PRIOR TO ROUGH–IN

MECHANICAL & ELECTRICAL ENGINEERING, INC.
PROJECT #14031

SANTA FE:
1222 Luisa St. Suite B
Santa Fe, New Mexico 87505
505/983–2389

ALBUQUERQUE:
8417 Washington Pl., NE
Albuquerque, NM 87113
505/856–1699

P: FP: M: E:

9-30-14
KARL M. TIPTON
NEW MEXICO
21200
#14031
PROFESSIONAL ENGINEER

autotroph
architecture.planning.sustainable design consulting

LUISA SENIOR CENTER 1500 LUISA STREET SANTA FE, NM 87504	VILLA CONSUELO SENIOR CENTER 1200 CAMINO CONSUELO STREET SANTA FE, NM 87504	PASATIEMPO SENIOR CENTER 664 ALTA VISTA STREET SANTA FE, NM 87504

LUISA SENIOR CENTER

ELECTRICAL LEGEND AND GENERAL NOTES

Project number	1210
Date	1 OCTOBER 2014
Drawn by	
Checked by	KMT,BGS

L-E0.0

GENERAL NOTES:

A. FIELD COORDINATE EXACT LIGHTING FIXTURE LOCATION AND MOUNTING HEIGHTS.

B. TEMPORARILY REMOVE ALL EXISTING CEILING MOUNTED SMOKE DETECTORS AND EMERGENCY LIGHTING. TEMPORARILY CAP FEEDERS FOR FUTURE REINSTALLATION. SEE NEW WORK PLAN FOR REINSTALLATION.

KEYED NOTES: ◇

1. REMOVE EXISTING LIGHT FIXTURE AND SALVAGE TO OWNER.
2. TEMPORARILY CAP FEEDERS AND SWITCHING FOR FUTURE REUSE. SEE NEW WORK PLAN FOR NEW FIXTURE TYPES AND LOCATION.
3. NO WORK IN THIS LOCATION.
4. REMOVE EXISTING EXIT SIGN AND SALVAGE TO OWNER.
5. REMOVE EXISTING PULL STATION AND SALVAGE FOR REINSTALLATION.
6. EXISTING FIXTURE TO REMAIN.
7. RELOCATE EXISTING TRANSFORMER TO NEW LOCATION SEE NEW PLANS FOR LOCATION.
8. REMOVE EXISTING ELECTRIC HAND DRYERS. SALVAGE TO OWNER. MAINTAIN AND TEMPORARILY CAP CIRCUIT IN PLACE FOR FUTURE RECONNECTION. SEE NEW WORK SHEET FOR ADDITIONAL INFORMATION.
9. REMOVE EXISTING WATER COOLER. SALVAGE TO OWNER. MAINTAIN AND TEMPORARILY CAP CIRCUIT IN PLACE FOR FUTURE RECONNECTION. SEE NEW WORK SHEET FOR ADDITIONAL INFORMATION.

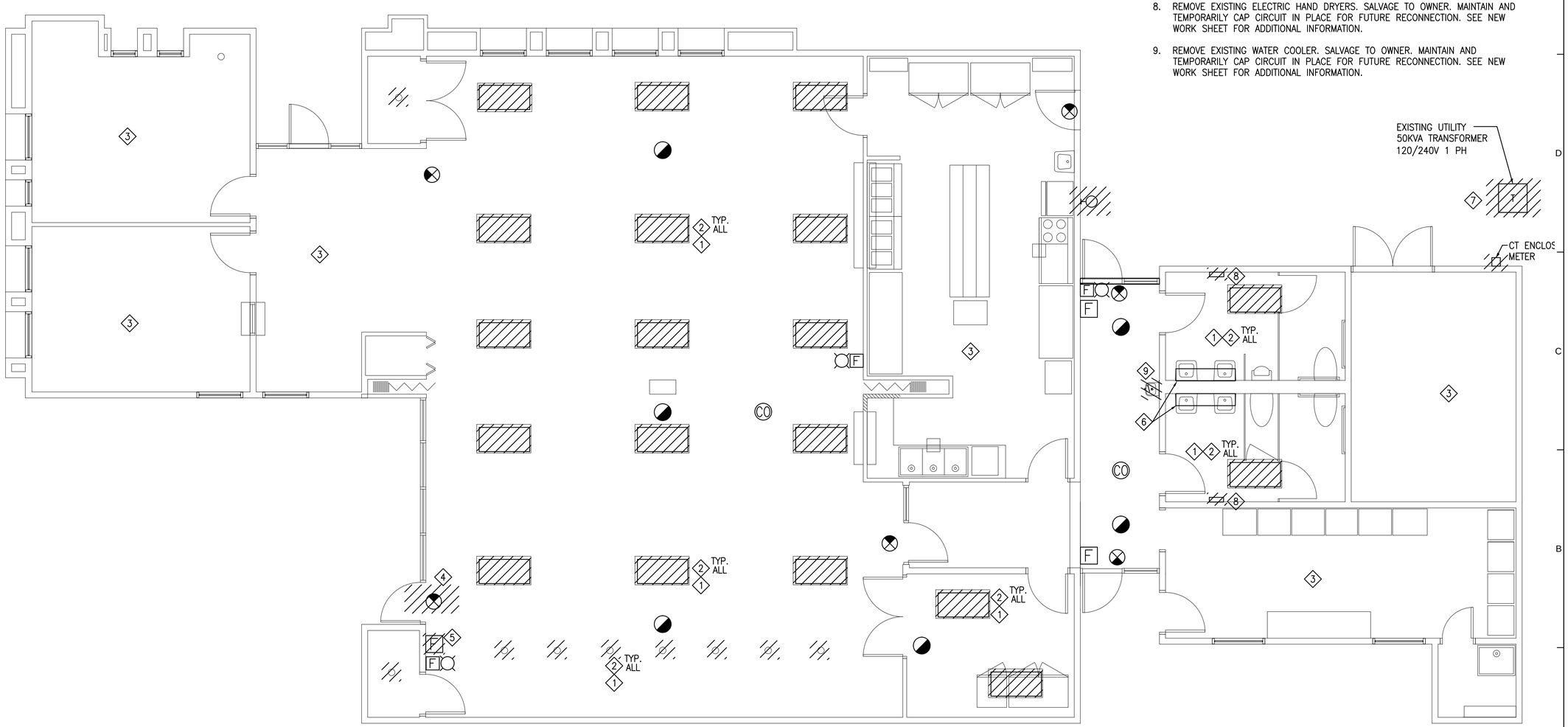

LUISA STREET – ELECTRICAL DEMOLITION FLOOR PLAN

SCALE: 1/4" = 1'-0"

MECHANICAL & ELECTRICAL ENGINEERING, INC.
PROJECT #14031

SANTA FE:
1222 Luisa St. Suite B
Santa Fe, New Mexico 87505
505/983-2389

ALBUQUERQUE:
8417 Washington Pl., NE
Albuquerque, NM 87113
505/856-1699

P: | FP: | M: | E:

KARL M. TIPTON
NEW MEXICO
21200
PROFESSIONAL ENGINEER
9-30-14

autotroph
architecture.planning.sustainable design consulting

LUISA SENIOR CENTER 1500 LUISA STREET SANTA FE, NM 87504	VILLA CONSUELO SENIOR CENTER 1200 CAMINO CONSUELO STREET SANTA FE, NM 87504
PASATIEMPO SENIOR CENTER 664 ALTA VISTA STREET SANTA FE, NM 87504	

LUISA SENIOR CENTER

ELECTRICAL
DEMOLITION
FLOOR PLAN

Project number	1210
Date	1 OCTOBER 2014
Drawn by	
Checked by	KMT,BGS

L-E1.0

LIGHT FIXTURE SCHEDULE

KEY	DESCRIPTION	MANUFACTURER	CATALOG #	#LAMPS/TYPE	VOLT.	WATTS/ FIXTURE	MOUNTING	COMMENTS
A	2x4 LED TROFFER	COOPER LIGHTING/ METALUX	24SR-LD1-48-S-UNV-L835-CD1-U	LED	UNV	49	RECESSED	
AE	2x4 LED TROFFER WITH BATTERY BACKUP	COOPER LIGHTING/ METALUX	24SR-LD1-48-S-UNV-EL14-L835-CD1-U	LED	UNV	49	RECESSED	
B	2x2 LED	COOPER LIGHTING/ METALUX	22SR-LD1-29-C-UNV-L835-CD1-U	LED	UNIV	30	RECESSED	
BE	2x2 LED WITH BATTERY BACKUP	COOPER LIGHTING/ METALUX	22SR-LD1-29-C-UNV-EL14-L835-CD1-U	LED	UNIV	30	RECESSED	
C	5" ADJUSTABLE WALLWASHER.	COOPER LIGHTING/ HALO	H550ICAT-RA5606930WH	LED	UNIV	10	RECESSED	
D	WALL PACK WITH PHOTO CELL	COOPER LIGHTING/ EDISON	ISS-BO1-EL-LED-BK-BBB	LED	UNIV	26	WALL	
F	UTILITY ROOM FIXTURE	LEVITON	9860-BL	CFL	UNIV	13	SURFACE	

GENERAL NOTES:

A. ALL LIGHTING FIXTURES ARE DIRECT REPLACEMENT ONLY. NO CHANGES TO SWITCHING OR CONTROLS REQUIRED. INSTALL FIXTURES WTIH NEW CEILING GRID. COORDINATE INSTALLATION WITH ARCHITECTURAL SHEETS.

KEYED NOTES: ◇

1. INSTALL NEW LIGHTING FIXTURE IN SAME LOCATION AS EXISTING FOR ONE TO ONE SWAP. CONNECT NEW FIXTURE TO EXISTING FEEDERS AND SWITCHING. PRIOR TO INSTALL FIELD VERIFY FIXTURE LOCATIONS.
2. REINSTALL ALL EXISTING FIRE PROTECTION AND SMOKE ALARM DEVICES ON NEW CEILING GRID.
3. INSTALL NEW SMOKE DETECTORS AND CONNECT TO EXISTING SYSTEM.
4. REINSTALL EXISTING PULL STATION REMOVED DURING DEMOLITION AT LOCATION SHOWN.
5. INSTALL NEW EXTERIOR FIXTURE IN NEW LOCATION FIELD COORDINATE HEIGHT UNDER PORTAL. PERMANENTLY EXISTING FIXTURE LOCATION. FIXTURE TO BE CONTROLLED BY ROOF MOUNTED PHOTOCELL, COORDINATE PHOTOCELL ORIENTATION WITH MANUFACTURES RECOMMENDATIONS.
6. INSTALL NEW FIRE ALARM DEVICES, INTERCONNECT DEVICES TO EXISTING FIRE ALARM SYSTEM.

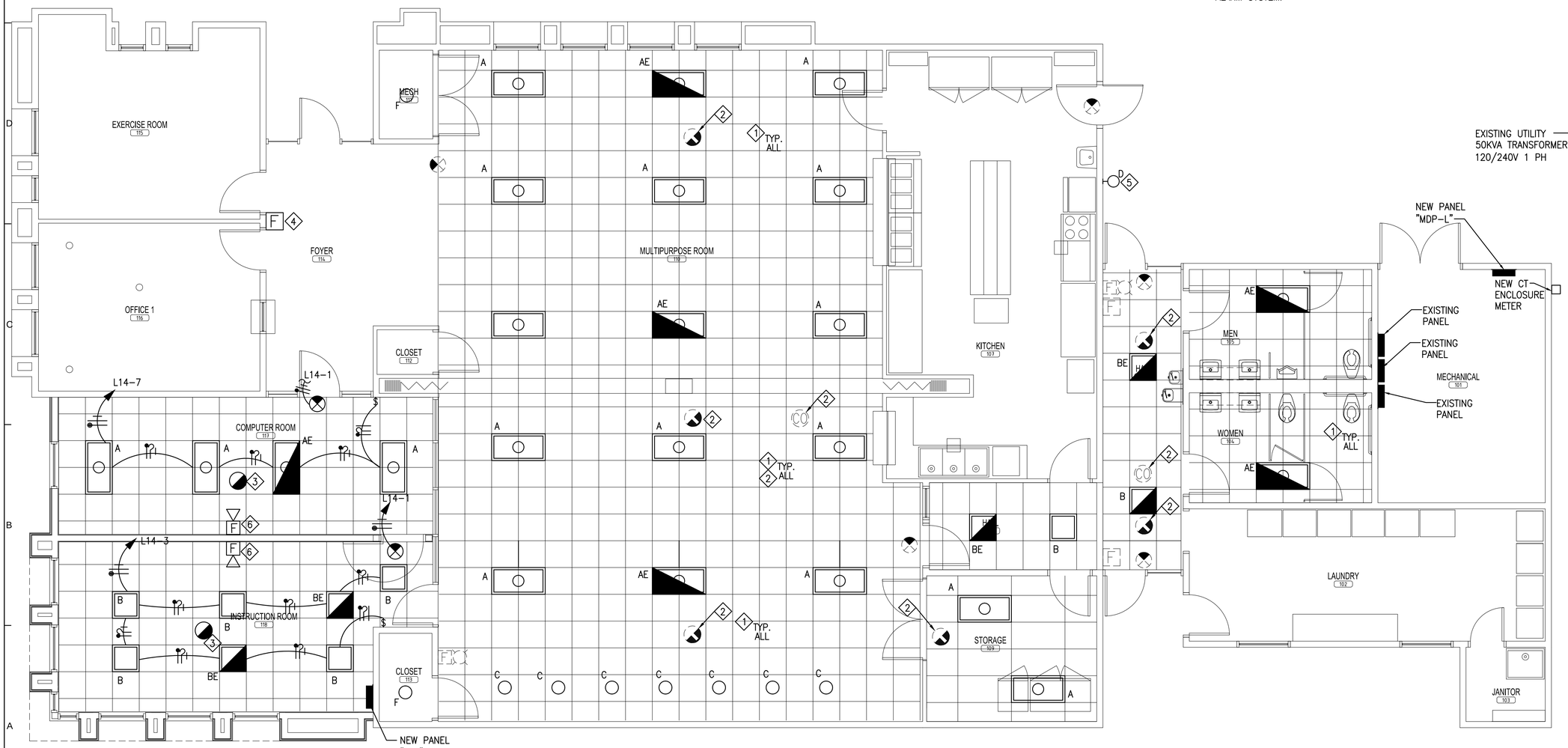

LUISA SENIOR CENTER – ELECTRICAL FLOOR PLAN – LIGHTING

SCALE: 1/4" = 1'-0"

MECHANICAL & ELECTRICAL ENGINEERING, INC.
PROJECT #14031

SANTA FE:
1222 Luisa St. Suite B
Santa Fe, New Mexico 87505
505/983-2389

ALBUQUERQUE:
8417 Washington Pl., NE
Albuquerque, NM 87113
505/856-1699

P: FP: M: E:

KARL M. TIPTON
NEW MEXICO
21200
PROFESSIONAL ENGINEER
9-30-14

autotroph
architecture.planning.sustainable design consulting

LUISA SENIOR CENTER 1500 LUISA STREET SANTA FE, NM 87504	VILLA CONSUELO SENIOR CENTER 1200 CAMINO CONSUELO STREET SANTA FE, NM 87504	PASATIEMPO SENIOR CENTER 664 ALTA VISTA STREET SANTA FE, NM 87504

LUISA SENIOR CENTER

ELECTRICAL
FLOOR PLAN
LIGHTING

Project number	1210
Date	1 OCTOBER 2014
Drawn by	
Checked by	KMT,BGS

L-E1.1

EQUIPMENT FEEDER SCHEDULE

KEY	DESCRIPTION	PHASE CONDUCTORS	NEUTRAL	EQUIP GROUND	ISOLATED GROUNDING CONDUCTOR	GROUNDING ELECTRODE CONDUCTOR	CONDUIT
A	20A 1Ø	1- #12 CU	1- #12 CU	1-#12 CU			1/2"
B	20A 1Ø	1- #12 CU	1- #12 CU	1-#12 CU			1/2"
C	30A 1Ø	1- #10 CU	1- #10 CU	1-#10 CU			1/2"

KEYED NOTES: ◇

1. INSTALL NEW ADA DOOR OPERATOR INTO BUILDING. PROVIDE ALL CONDUIT AND FEEDERS. COORDINATE INSTALL WITH MANUFACTURES RECOMMENDATION.
2. INSTALL 20A/1P, 120V, FUSIBLE DISCONNECT SWITCH. FUSES SIZED AT MANUFACTURERS RECOMMENDATION. EXTEND CONDUIT FROM DISCONNECT TO PANEL INDICATED. COORDINATE LOCATION TO MOUNT DISCONNECT IN CONVENIENT LOCATION AND COMPLY AS REQUIRED FOR NEC WORKING CLEARANCES AND OWNER REQUIREMENTS.
3. EXTEND 3/4"C WITH CONTROL CONDUCTORS AS REQUIRED TO RESPECTIVE A/C UNIT. PROVIDE ALL WIRING AND CONNECTIONS FOR A COMPLETE AND OPERATIONAL INSTALLATION. COORDINATE WITH MECHANICAL AND A/C UNIT CONTROL DIAGRAMS.
4. INSTALL 20A/2P, 208V, FUSIBLE DISCONNECT SWITCH. FUSES SIZED AT MANUFACTURERS RECOMMENDATION. EXTEND CONDUIT FROM DISCONNECT TO PANEL INDICATED. COORDINATE LOCATION TO MOUNT DISCONNECT IN CONVENIENT LOCATION AND COMPLY AS REQUIRED FOR NEC WORKING CLEARANCES AND OWNER REQUIREMENTS.
5. INSTALL 30A/2P, 208V, FUSIBLE DISCONNECT SWITCH. FUSES SIZED AT MANUFACTURERS RECOMMENDATION. EXTEND CONDUIT FROM DISCONNECT TO PANEL INDICATED. COORDINATE LOCATION TO MOUNT DISCONNECT IN CONVENIENT LOCATION AND COMPLY AS REQUIRED FOR NEC WORKING CLEARANCES AND OWNER REQUIREMENTS.
6. INSTALL 120V MECHANICAL UNIT PROVIDE NECESSARY MEANS OF DISCONNECT.\
7. INSTALL NEW DRINKING FOUNTAIN, RECONNECT TO EXISTING DRINKING FOUNTAIN POWER. FIELD VERIFY CIRCUIT CAPACITY PRIOR TO INSTALL.
8. REINSTALL EXISTING TRANSFORMER IN NEW LOCATION. COORDINATE LOCATION WITH ARCHITECTURAL SHEETS.
9. INSTALL NEW HAND DRYERS. RECONNECT TO EXSISTING DRYER CIRCUIT. FIELD VERIFY CIRCUIT CAPACITY PRIOR TO INSTALL.

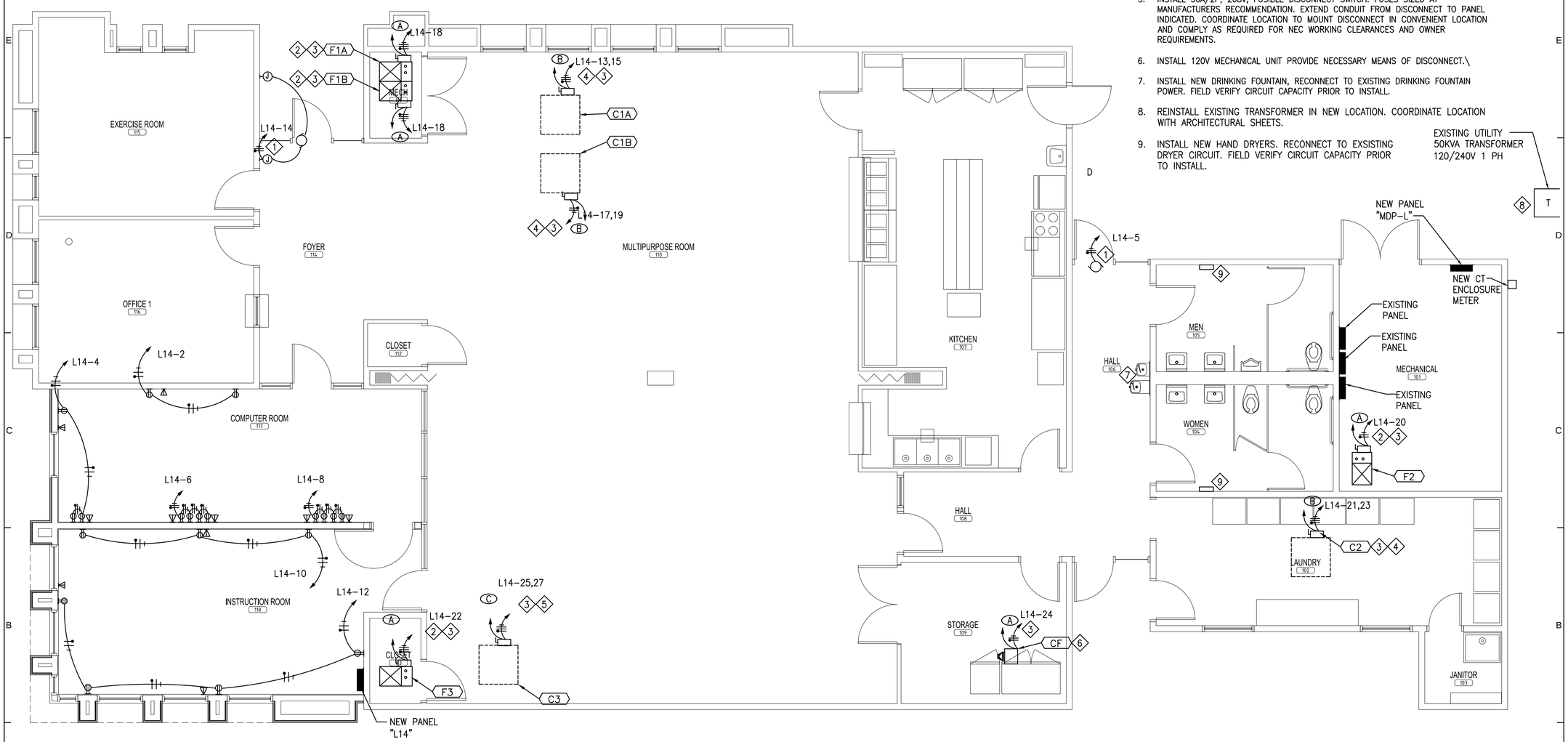

LUISA SENIOR CENTER – ELECTRICAL FLOOR PLAN – POWER

SCALE: 1/4" = 1'-0"

MECHANICAL & ELECTRICAL ENGINEERING, INC.
PROJECT #14031

SANTA FE:
1222 Luisa St. Suite B
Santa Fe, New Mexico 87505
505/983-2389

ALBUQUERQUE:
8417 Washington Pl., NE
Albuquerque, NM 87113
505/856-1699

P: FP: M: E:

KARL M. TIPTON NEW MEXICO 21200 PROFESSIONAL ENGINEER 9-30-14

autotroph
architecture.planning.sustainable design consulting

LUISA SENIOR CENTER 1500 LUISA STREET SANTA FE, NM 87504	VILLA CONSUELO SENIOR CENTER 1200 CAMINO CONSUELO STREET SANTA FE, NM 87504
PASATIEMPO SENIOR CENTER 664 ALTA VISTA STREET SANTA FE, NM 87504	

LUISA SENIOR CENTER

ELECTRICAL
FLOOR PLAN
POWER

Project number	1210
Date	1 OCTOBER 2014
Drawn by	
Checked by	KMT,BGS

L-E1.2

PANEL "MDP-L"

Load Description	Cat #	Brkr Size	poles	CCT #	Phase A Load	Phase B Load	CCT #	poles	Brkr Size	Cat #	Load Description
NEW PANEL "L14"	4	200	2	1	15092						
					38400		2	2	400	4	EXISTING PANELS
	4	200	2	3		12536					
						38400	4	2	400	4	
SPACE			1	5	0						
					0		6	1			SPACE
SPACE			1	7		0					
						0	8	1			SPACE
		Total VA			53492	50936					

Load Category	Connected	Dmd %	Demand
1.) Lighting	0	1.25	0
2.) Recepticals	0	1	0
	0	0.5	0
3.) Motor	0	1.25	0
	0	1	0
4.) Sub - Panels	104428		104428
Total	104428		104428

Feeder Size	SEE RISER
Connected kVA	104.43
Demand kVA	104.43
Connected Amps	435
Demand Amps	435

FED FROM TRANSFORMER
PER NEC: ALL MULTIWIRE BRANCH CIRCUITS SHALL
BE PROVIDED WITH MULTIPOLE CIRCUIT BREAKERS

PANEL "MDP-L", 120/240V 1 PHASE, 3 WIRE
600AMP, MCB, 24 CIRCUIT, SURFACE MOUNT,
NEMA 3R ENCLOSURE, BOTTOM FEED, DOOR-IN-DOOR
SQUARE "D" OR EQUAL
22,000 AIC

SHORT CIRCUIT ANALYSIS - SINGLE PHASE

ASSUME THE BUILDING TRANSFORMER IS 50 KVA WITH UNLIMITED PRIMARY SHORT CIRCUIT AMPS AND 1.7 PERCENT IMPEDANCE. THE MAXIMUM LET THROUGH CURRENT AT THE SECONDARY TERMINALS OF THE TRANSFORMER IS : 19050 AMPS. THE MAXIMUM AVAILABLE FAULT AT THE MAIN FUSIBLE DISCONNECT WILL BE APPROXIMATELY 12495.86 AMPS. THE MAXIMUM AVAILABLE FAULT AT THE CLOSEST PANELBOARD WILL BE LESS THAN 22,000 AMPS USING TYPE JJN FUSES IN THE MAIN SWITCH. ALL NEW PANELBOARDS SHALL BE RATED A MINIMUM OF 22,000 AMPS

PANEL "L14"

Load Description	Cat #	Brkr Size	poles	CCT #	Phase A Load	Phase B Load	CCT #	poles	Brkr Size	Cat #	Load Description
LIGHT EMER/EXIT	1	20	1	1	100						
					720		2	1	20	2	RECEPT COMP RM
LIGHTS COMP RM	1	20	1	3		200					
						720	4	1	20	2	RECEPT COMP RM
AUTO DOOR	2	20	1	5	800						
					720		6	1	20	2	RECEPT COMP RM
LIGHTS INST RM	2	20	1	7		200					
						720	8	1	20	2	RECEPT COMP RM
SPARE		20	1	9	0						
					720		10	1	20	2	RECEPT INST RM
SPARE		20	1	11		0					
						720	12	1	20	2	RECEPT INST RM
C1A	2	30	2	13	2820						
					1000		14	1	20	2	JBOX AUTO DOOR
	2	30	2	15		2820					
						0	16	1	20		SPARE
C1B	2	30	2	17	2820						
					1140		18	1	20	3	F1A,F1B
	2	30	2	19		2820					
						816	20	1	20	3	F2
C2	2	30	2	21	2580						
					1632		22	1	20	3	F3
	2	30	2	23		2583					
						100	24	1	20	3	CF
C3	3	50	2	25	4104						
							26	1	20		SPARE
	3	50	2	27		4104					
							28	1	20		SPARE
SPARE		20	1	29							
							30	1	20		SPARE
		Total VA			19156	15803					

Load Category	Connected	Dmd %	Demand
1.) Lighting	300	1.25	375
2.) Recepticals	10000	1	10000
	12763	0.5	6381.5
3.) Motor	8208	1.25	10260
	3688	1	3688
4.) Sub - Panels	0		0
Total	34959		30704.5

Feeder Size	SEE RISER
Connected kVA	34.96
Demand kVA	30.70
Connected Amps	146
Demand Amps	128

FED FROM MDP-L
PER NEC: ALL MULTIWIRE BRANCH CIRCUITS SHALL
BE PROVIDED WITH MULTIPOLE CIRCUIT BREAKERS

PANEL "L14", 120/240V 1 PHASE, 3 WIRE
150AMP, MCB,30 CIRCUIT, SURFACE MOUNT,
NEMA 3R ENCLOSURE, BOTTOM FEED, DOOR-IN-DOOR
SQUARE "D" NQO LOAD CENTER OR EQUAL
22,000 AIC

MECHANICAL / ELECTRICAL RESPONSIBILITY TABLE												
UNIT #	UNIT		DISCONNECT		STARTER/CONTACTOR		CONTROL WIRE		CONTROL CONDUIT		AUTO SHUT-OFF	
	PROVIDED	INSTALLED	PROVIDED	INSTALLED	PROVIDED	INSTALLED	PROVIDED	INSTALLED	PROVIDED	INSTALLED	PROVIDED	INSTALLED
F	MC	MC	MC	EC	MC	MC	CC	CC	EC	EC	N/A	N/A
C	MC	MC	MC	EC	MC	MC	CC	CC	EC	EC	N/A	N/A
CF	MC	MC	N/A	N/A	N/A	N/A	CC	CC	EC	EC	N/A	N/A
T	MC	MC	N/A	N/A	N/A	N/A	CC	CC	EC	EC	N/A	N/A
T1	MC	MC	N/A	N/A	N/A	N/A	CC	CC	EC	EC	N/A	N/A

MC Mechanical Contractor
EC Electrical Contractor
CC Controls Contractor

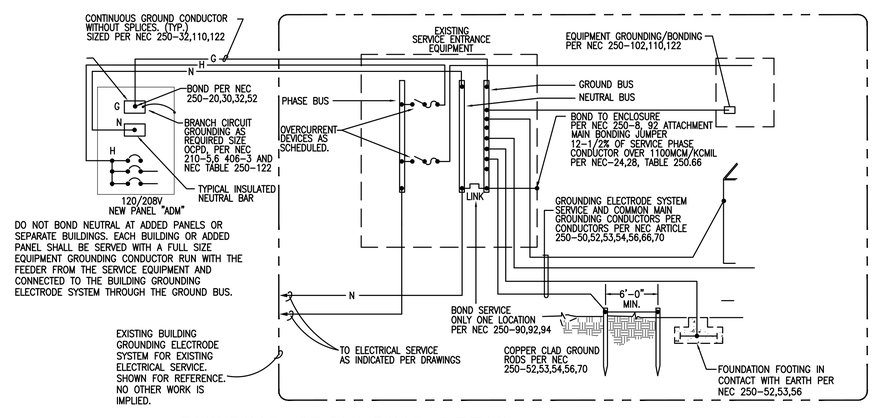

BUILDING GROUNDING DETAIL

N.T.S.

MECHANICAL & ELECTRICAL ENGINEERING, INC.
PROJECT #14031
SANTA FE:
1222 Luisa St. Suite B
Santa Fe, New Mexico 87505
505/983-2389
ALBUQUERQUE:
8417 Washington Pl., NE
Albuquerque, NM 87113
505/856-1699
P: FP: M: E:

9-30-14
KARL M. TIPTON
NEW MEXICO
21200
PROFESSIONAL ENGINEER

autotroph
architecture.planning.sustainable design consulting

LUISA
SENIOR CENTER
1500 LUISA STREET
SANTA FE, NM 87504

VILLA CONSUELO
SENIOR CENTER
1200 CAMINO CONSUELO STREET
SANTA FE, NM 87504

PASATIEMPO
SENIOR CENTER
664 ALTA VISTA STREET
SANTA FE, NM 87504

LUISA SENIOR CENTER

ELECTRICAL RISER

Project number	1210
Date	1 OCTOBER 2014
Drawn by	
Checked by	KMT,BGS

L-E6.1

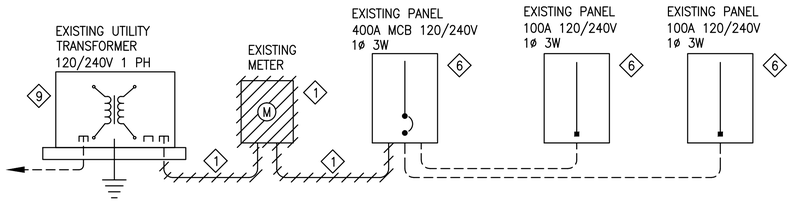

ELECTRICAL DEMOLITION RISER DIAGRAM – LUISA SENIOR CENTER

SCALE: NOT TO SCALE

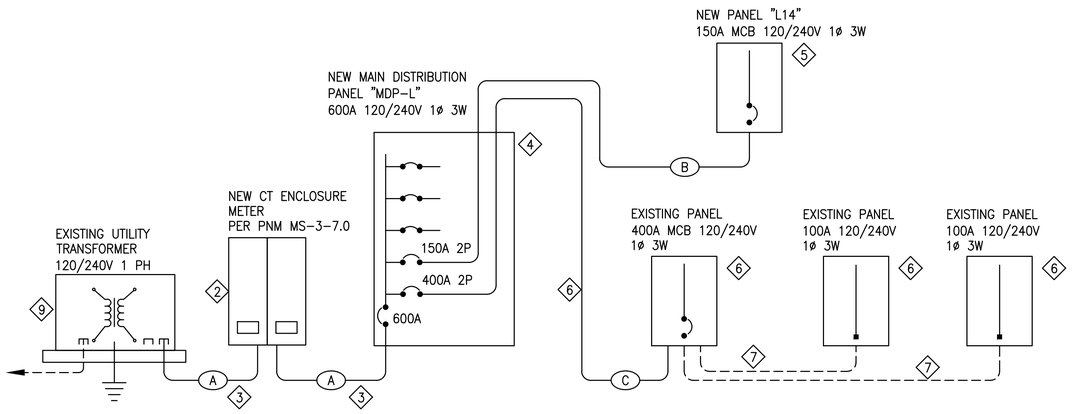

FEEDER SCHEDULE

KEY	DESCRIPTION	PHASE CONDUCTORS	EQUIP GROUND	ISOLATED GROUNDING CONDUCTOR	GROUNDING ELECTRODE CONDUCTOR	CONDUIT
A	600A 1ø	(2)2-#600 MCM CU	(2)1-1/0 CU			2-2 1/2"
B	150A 1ø	2-#1/0 CU	1-#6 CU			2"
C	400A 1ø	2-#600 MCM CU	1-#2 CU			3"

LEGEND

———	NEW CONDUIT NEW FEEDERS
- - - -	EXISTING CONDUIT EXISTING FEEDERS

ELECTRICAL RISER DIAGRAM – LUISA SENIOR CENTER

SCALE: NOT TO SCALE

KEYED NOTES: ◇

1. REMOVE EXISTING METER, CONDUIT, AND FEEDERS. COORDINATE WORK WITH PNM.
2. INSTALL NEW CT ENCLOSURE/METER PER PNM REQUIREMENTS, DWG MS-3-7.0. COORDINATE WORK WITH PNM.
3. INSTALL NEW CONDUITS AND FEEDERS PER PNM REQUIREMENTS. COORDINATE WORK WITH PNM.
4. INSTALL NEW 400A MAIN DISTRIBUTION PANEL.
5. INSTALL NEW 150A PANEL.
6. EXISTING PANEL TO REMAIN.
7. EXISTING FEEDERS AND CONDUIT TO REMAIN.
8. EXTEND NEW CONDUIT AND FEEDERS FORM NEW MAIN DISTRIBUTION PANEL TO EXISTING PANEL 400A PANEL.
9. EXISTING UTILITY TRANSFORMER TO BE RELOCATED COORDINATE WORK WITH PNM.

MECHANICAL & ELECTRICAL ENGINEERING, INC.
PROJECT #14031
SANTA FE:
1222 Luisa St. Suite B
Santa Fe, New Mexico 87505
505/983-2389
ALBUQUERQUE:
8417 Washington Pl., NE
Albuquerque, NM 87113
505/856-1699
P: FP: M: E:

9-30-14
KARL M. TIPTON
NEW MEXICO
21200
PROFESSIONAL ENGINEER

autotroph
architecture.planning.sustainable design consulting

LUISA SENIOR CENTER 1500 LUISA STREET SANTA FE, NM 87504	VILLA CONSUELO SENIOR CENTER 1200 CAMINO CONSUELO STREET SANTA FE, NM 87504
PASATIEMPO SENIOR CENTER 664 ALTA VISTA STREET SANTA FE, NM 87504	

LUISA SENIOR CENTER

ELECTRICAL RISER

Project number	1210
Date	1 OCTOBER 2014
Drawn by	
Checked by	KMT,BGS

L-E6.0

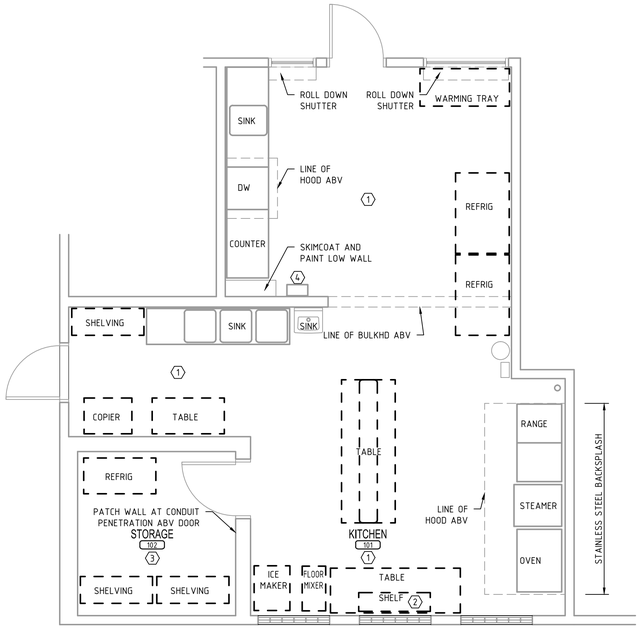

N 2C FLOOR PLAN
1/4"=1'-0"

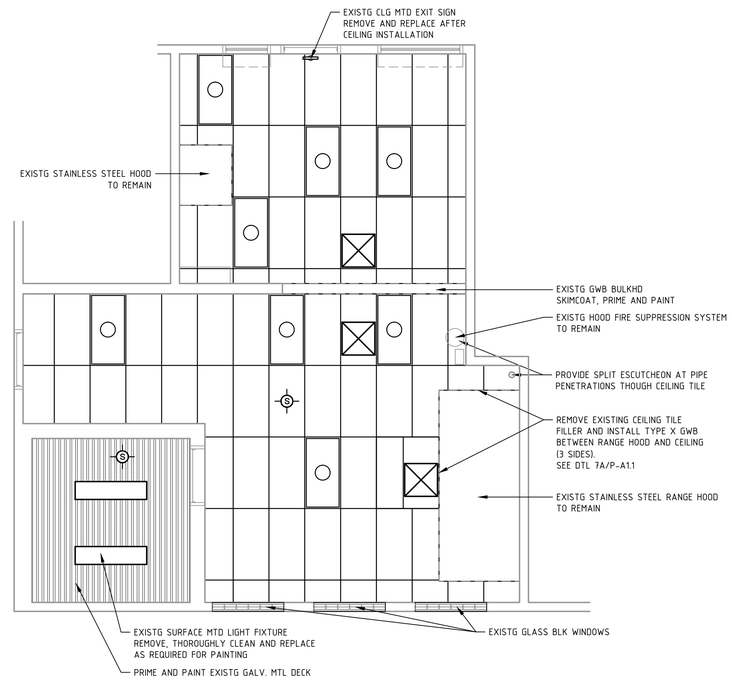

N 5C REFLECTED CEILING PLAN
1/4"=1'-0"

LEGEND

- MOVEABLE KITCHEN EQUIPMENT OR FIXTURE
- FIXED KITCHEN EQUIPMENT OR FIXTURE.
- EXISTING 2x4 FLUORESCENT TROFFER
- EXISTING CEILING DIFFUSER
- EXISTING SMOKE DETECTOR REMOVE AND REINSTALL

GENERAL NOTES

1. CONTRACTOR SHALL CAREFULLY RELOCATE AND PROTECT FROM DAMAGE ALL MOVEABLE KITCHEN EQUIPMENT AND FIXTURES PRIOR TO BEGINNING WORK AND REINSTALL ON ORIGINAL LOCATION AT THE COMPLETION OF THE WORK.
2. CONTRACTOR SHALL PROTECT FROM DAMAGE ALL FIXED EQUIPMENT AND FIXTURES TO REMAIN IN PLACE.
3. REMOVE ALL SURFACE MOUNTED ELECTRICAL DEVICES, DEVICE FACE PLATES AND WALL MOUNTED EXIT SIGNS PRIOR TO WALL FINISHING AND REINSTALL WHEN PAINT IS DRY.
4. THROUGHLY CLEAN ALL HVAC WALL GRILLS PRIOR TO WALL FINISHING AND REINSTALL WHEN PAINT IS DRY.
5. REMOVE ALL SIGNAGE, PLACARDS, CLOCKS, WALL MOUNTED ACCESSORIES AND BULLETIN BOARDS ON WALLS AND DOORS PRIOR TO PAINTING. REINSTALL WHEN PAINT IS DRY.
6. SKIMCOAT ALL EXISTING TEXTURED WALL SURFACES IN KITCHEN 101 AND STORAGE 102 WITH THREE COATS OF DRYWALL COMPOUND AND SAND TO ACHIEVE A SMOOTH EVEN, TEXTURE FREE SURFACE.
7. REMOVE HARDWARE AND SAND DOORS SMOOTH PRIOR TO PAINTING. REINSTALL HARDWARE WHEN PAINT IS DRY.
8. PRIME AND PAINT ALL SKIM COATED SURFACES PER SPECIFICATION. PAINT ALL OTHER PREVIOUSLY PAINTED SURFACES PER SPECIFICATIONS. THERE WILL BE A SINGLE PAINT COLOR AS SELECTED BY ARCHITECT.
9. ALL DOORS MUST CLOSE AFTER PAINTING WITHOUT RUBBING FRAME. ALL SELF-CLOSING DOORS MUST LATCH AFTER PAINTING WITHOUT HELP. REMOVE PAINT BUILD-UP AS REQUIRED PRIOR TO PAINTING UNTIL DOORS WILL NOT RUB FRAME AND LATCH WITHOUT HELP.

KEYED NOTES

1. REMOVE EXISTING SUSPENDED CEILING TILES AND TILE MOUNTED DEVICES. THOROUGHLY CLEAN EXISTING GRID SYSTEM, HVAC DIFFUSERS, HVAC GRILLES AND LIGHT FIXTURES. INSTALL NEW CEILING TILES TYPE ACT-2 THROUGHOUT. CLEAN AND REINSTALL ALL CEILING TILE MOUNTED DEVICES
2. WALL MTD SHELF TO BE REMOVED AND SECURELY REINSTALL AFTER SKIMCOAT
3. IN STORAGE 101 NEATLY SEAL GAPS BETWEEN TOP OF CMU WALL AND METAL DECK CEILING AS FOLLOWS.

   REMOVE EXISTING FIBERGLASS INSULATION

   AT LARGE GAPS APPLY DOW; GREAT STUFF "BIG GAP" FILLER. TRIM FLUSH WITH CMU, SAND SMOOTH, PRIME AND PAINT.

   AT SMALL GAPS NEATLY APPLY SIKAFLEX 15 LM SEALANT AND PAINT.
4. WALL MOUNTED ELECTRICAL DISCONNECT SWITCH. PROTECT DURING SKIMCOAT AND PAINTING

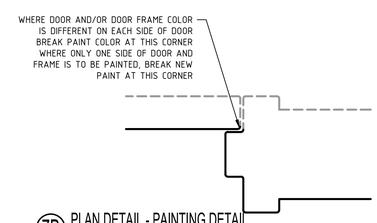

7B PLAN DETAIL - PAINTING DETAIL
NOT TO SCALE

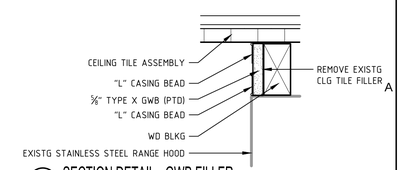

7A SECTION DETAIL - GWB FILLER
3"=1'-0"

STATE OF NEW MEXICO
Alexander C. Dzurec
NO. 003942
11/4/14
REGISTERED ARCHITECT

autotroph
architecture.planning.sustainable design consulting

No.	Description	Date

SENIOR CENTER IMPROVEMENTS

LUISA	VILLA CONSUELO	PASATIEMPO
SENIOR CENTER	SENIOR CENTER	SENIOR CENTER
1500 LUISA STREET	1200 CAMINO CONSUELO STREET	664 ALTA VISTA STREET
SANTA FE, NM 87504	SANTA FE, NM 87504	SANTA FE, NM 87504

PASATIEMPO SENIOR CENTER

FLOOR PLAN
REFLECTED CEILING PLAN

Project number 1310

Date 1 OCTOBER 2014

P-A1.1

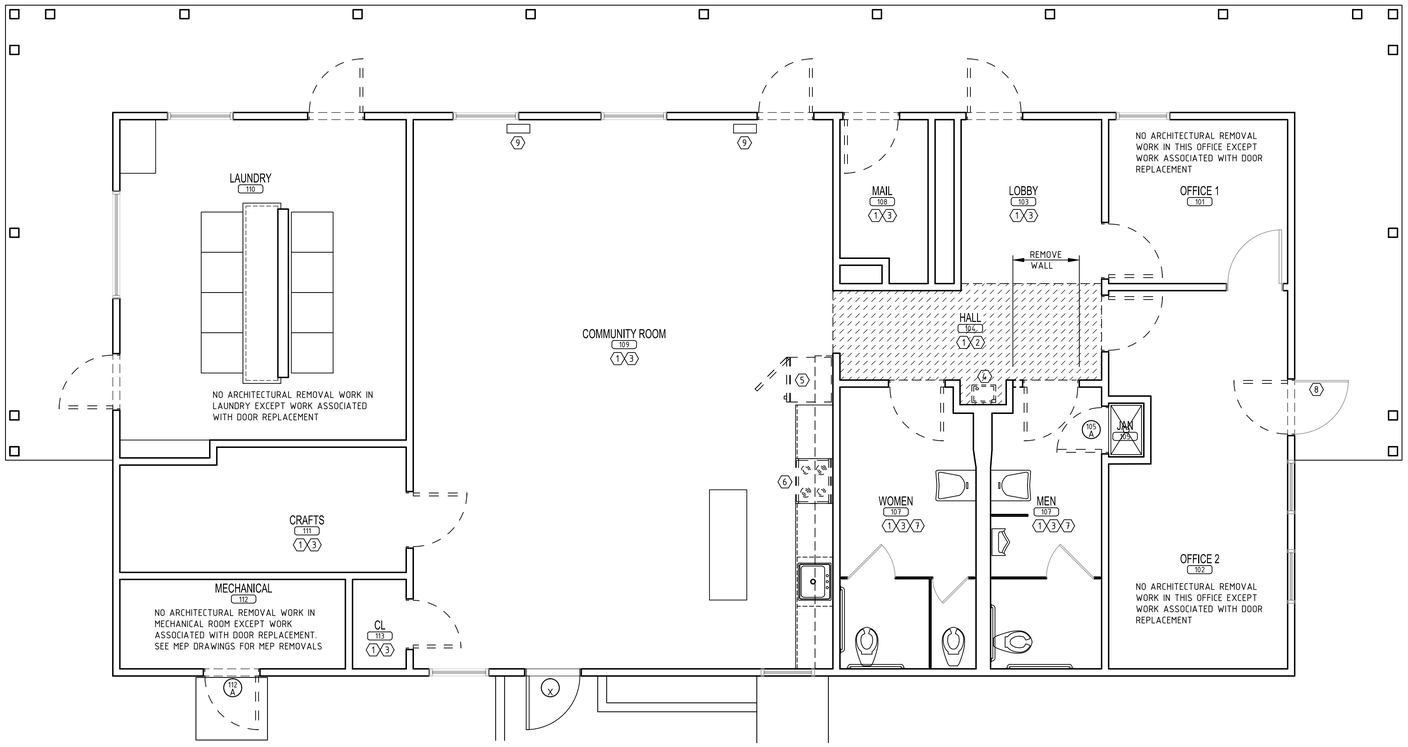

N PROJECT TRUE

2C EXISTING CONDITIONS AND REMOVALS PLAN
1/4"=1'-0"

LEGEND - REMOVALS

REMOVE WALL CONSTRUCTION

REMOVE DOOR, DOOR FRAME, THRESHOLD AND ASSOCIATED HARDWARE.
NOTE: AT DOOR 110B SALVAGE EXISTING ELECTRONIC LOCKSET FOR REINSTALLATION ON NEW DOOR

REMOVE EXISTING GWB SOFFIT AND SOFFIT FRAMING

GENERAL NOTES - REMOVALS

1. THE OWNER RESERVES THE RIGHT TO SALVAGE ANY EXISTING EQUIPMENT OR MATERIALS (EVEN IF INDICATED TO BE REMOVED) FROM THE PROJECT SITE AT ANY TIME PRIOR TO SELECTIVE DEMOLITION.
2. COORDINATE REMOVAL OF EXISTING UTILITIES WITH THE ONGOING USE OF THE FACILITY BY THE OWNER. DO NOT INTERRUPT UTILITIES SERVICING SPACES USED BY THE OWNER AT ANY TIME DURING CONSTRUCTION WITHOUT WRITTEN APPROVAL OF THE OWNER.
3. AT ROOFTOP EQUIPMENT REMOVALS PROVIDE TEMPORARY WEATHER PROTECTION DURING THE INTERVAL BETWEEN REMOVAL OF THE EXISTING ROOFTOP EQUIPMENT AND THE INSTALLATION OF NEW EQUIPMENT TO INSURE THAT NO WATER INFILTRATION OR DAMAGE OCCURS TO STRUCTURE OR INTERIOR AREAS OF EXISTING BUILDING
4. SEE MECHANICAL, ELECTRICAL AND PLUMBING DRAWING FOR ADDITIONAL REMOVALS
5. SEE PROJECT MANUAL FOR ADDITIONAL REQUIREMENTS
6. PATCH ALL AREAS WHERE EXISTING CONSTRUCTION HAS BEEN REMOVED AND/OR NEW WORK ABUTS EXISTING. MATCH ALL SURFACES AS REQUIRED
7. DEBRIS SHALL BE CARTED AWAY FROM THE SITE AS A ROUTINE OPERATION AND LEGALLY DISPOSED OF.
8. REMOVE ANY BUILD-UP DIRT OR GRIME FROM ALL SURFACES TO RECEIVE PAINT PRIOR TO PAINTING

INDICATED NOTES - REMOVALS

1. REMOVE THIN CEMENTITIOUS FINISHED FLOORING, VCT FLOORING OR OTHER FLOORING FINISHES AND ADHESIVES TO BARE CONCRETE FLOOR SLAB. REMOVE ASSOCIATED BASE.
2. REMOVE EXISTING GWB SOFFIT AND SOFFIT FRAMING
3. REMOVE SUSPENDED CEILING TILES, GRID SYSTEMS AND LIGHT FIXTURES. REMOVE, THOROUGHLY CLEAN AND REINSTALL EXISTING, HVAC DIFFUSERS, HVAC GRILLES SMOKE DETECTORS, AND ALL OTHER CEILING MOUNTED DEVICES AFTER CEILING INSTALLATION IS COMPLETE. SEE MEP DRAWINGS AND REFLECTED CEILING PLAN FOR ADDITIONAL INFORMATION.
4. REMOVE DRINKING FOUNTAIN PER PLUMBING
5. REMOVE REFRIGERATOR
6. REMOVE RANGE AND RANGEHOOD
7. IN MEN'S AND WOMAN'S ROOM REMOVE AND REINSTALL PLUMBING FIXTURES, TOILET PARTITIONS, GRAB BARS AND ACCESSORIES AS REQUIRED TO INSTALL CERAMIC TILE FLOOR AND WAINSCOT. REINSTALL WHEN TILE WORK IS COMPLETE. SEE PLUMBING FOR ADDITIONAL INFORMATION.
8. REMOVE AND REINSTALL SCREEN DOOR. REINSTALL WITH NEW DOOR AND FRAME
9. SEE MECHANICAL DRAWINGS FOR FLOOR DIFFUSER REMOVALS. PATCH FLOOR TO MATCH EXISTING

STATE OF NEW MEXICO
Alexander C. Dzurec
NO. 003942
11/4/14
REGISTERED ARCHITECT

autotroph
architecture.planning.sustainable design consulting

No.	Description	Date

SENIOR CENTER IMPROVEMENTS

LUISA
SENIOR CENTER
1500 LUISA STREET
SANTA FE, NM 87504

VILLA CONSUELO
SENIOR CENTER
1200 CAMINO CONSUELO STREET
SANTA FE, NM 87504

PASATIEMPO
SENIOR CENTER
664 ALTA VISTA STREET
SANTA FE, NM 87504

VILLA CONSUELO SENIOR CENTER

EXISTING CONDITIONS AND REMOVALS PLAN

Project number 1310
Date 1 OCTOBER 2014

V-A1.0

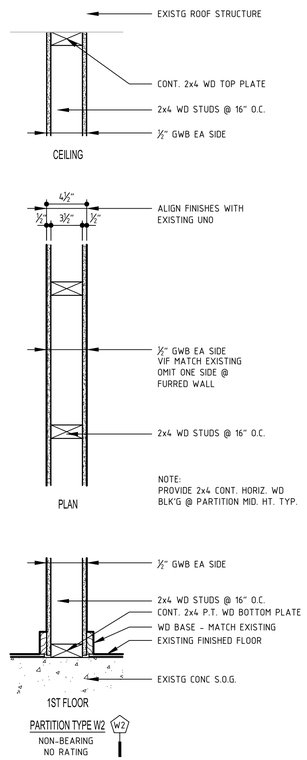

1C INTERIOR WALL TYPE
1 1/2"=1'-0"

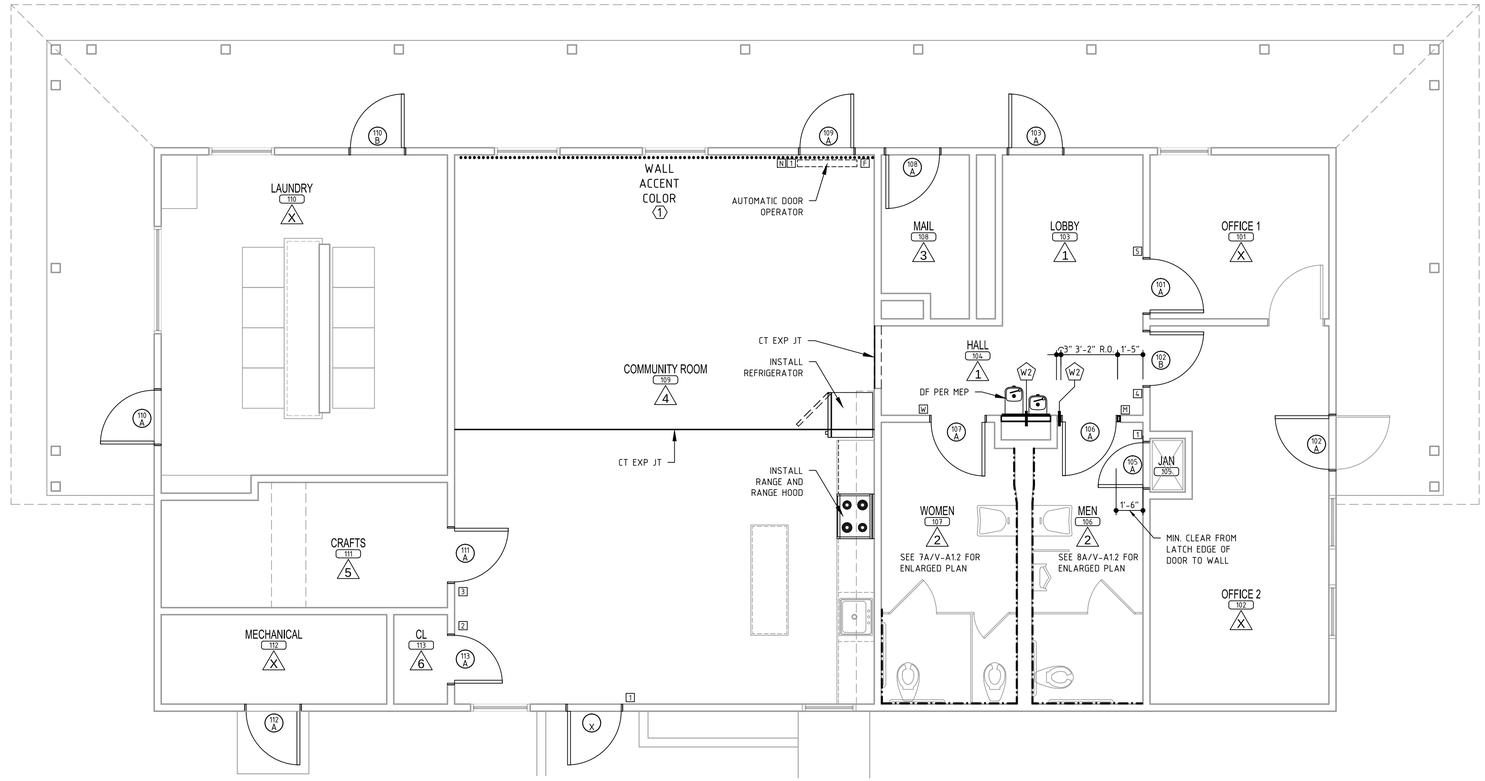

3C FLOOR PLAN
1/4"=1'-0"

INTERIOR PAINTING NOTES

1. REMOVE ALL ELECTRICAL DEVICE FACE PLATES IN ALL SPACES PRIOR TO PAINTING AND REINSTALL WHEN PAINT IS DRY.
2. REMOVE ALL BULLETIN BOARDS IN ALL SPACES PRIOR TO PAINTING AND REINSTALL WHEN PAINT IS DRY.
3. REMOVE ALL SIGNAGE, PLACARDS PAINTINGS AND DECORATIONS IN ALL SPACES ON WALLS AND DOORS PRIOR TO PAINTING AND DELIVER TO OWNER.
4. PATCH AND SAND WALLS AND EXISTING DOORS TO REMAIN SMOOTH PRIOR TO PAINTING.
5. DO NOT PAINT SUSPENDED ACOUSTIC TILE CEILINGS.
6. TAKE EXTREME CARE WHEN PAINTING NEAR SMOKE DETECTORS. PROTECT (COVER) SMOKE DETECTORS DURING PAINTING OPERATIONS. NO PAINT IS PERMITTED ON SMOKE DETECTORS. PROMPTLY REMOVE ANY PAINT.
7. ALL DOORS MUST CLOSE AFTER PAINTING WITHOUT RUBBING FRAME. ALL SELF-CLOSING DOORS MUST LATCH AFTER PAINTING WITHOUT HELP. REMOVE PAINT BUILD-UP AS REQUIRED PRIOR TO PAINTING UNTIL DOORS WILL NOT RUB FRAME AND LATCH WITHOUT HELP.

INTERIOR PAINTING SCHEDULE

X NO PAINTING WORK IN THIS SPACE

1 HALL 104, LOBBY 103

1. WALLS - COLOR C SATIN (EGGSHELL) FINISH
2. DOORS - FACTORY FINISH
3. DOOR FRAMES - COLOR B SEMI-GLOSS FINISH
3. DO NOT PAINT CEILING.

2 WOMEN 107, MEN 106

1. WALLS - COLOR A SATIN (EGGSHELL) FINISH
2. DOORS - FACTORY FINISH
3. DOOR FRAMES - COLOR B SEMI-GLOSS FINISH
3. DO NOT PAINT CEILING.

3 MAIL 108

1. WALLS - COLOR E SATIN (EGGSHELL) FINISH
2. DOORS - FACTORY FINISH
3. DOOR FRAMES - COLOR B SEMI-GLOSS FINISH
3. GWB CEILING - COLOR E FLAT FINISH

4 COMMUNITY ROOM 109

1. WALLS - COLOR D SATIN (EGGSHELL) FINISH

ACCENT COLOR 1 ••••••••••••••••• COLOR 1 (EGGSHELL FINISH)

2. DOORS - FACTORY FINISH
3. DOOR FRAMES - COLOR B SEMI-GLOSS FINISH
3. DO NOT PAINT CEILING.

5 CRAFTS 111

1. WALLS - COLOR D SATIN (EGGSHELL) FINISH
2. DOORS - FACTORY FINISH
3. DOOR FRAMES - COLOR B SEMI-GLOSS FINISH
3. GWB CEILING - COLOR E FLAT FINISH

6 CLOSET 113

1. WALLS - COLOR E SATIN (EGGSHELL) FINISH
2. WOOD SHELVING - COLOR E SEMI-GLOSS FINISH
3. DOORS - FACTORY FINISH
4. DOOR FRAMES - COLOR B SEMI-GLOSS FINISH
3. GWB CEILING - COLOR E FLAT FINISH

STATE OF NEW MEXICO
Alexander C. Dzurec
NO. 003942
11/4/14
REGISTERED ARCHITECT

autotroph
architecture.planning.sustainable design consulting

No.	Description	Date

SENIOR CENTER IMPROVEMENTS

LUISA	VILLA CONSUELO	PASATIEMPO
SENIOR CENTER	SENIOR CENTER	SENIOR CENTER
1500 LUISA STREET	1200 CAMINO CONSUELO STREET	664 ALTA VISTA STREET
SANTA FE, NM 87504	SANTA FE, NM 87504	SANTA FE, NM 87504

VILLA CONSUELO SENIOR CENTER

FLOOR PLAN

Project number 1310

Date 1 OCTOBER 2014

V-A1.1

LEGEND - REFLECTED CEILING PLAN

- LIGHT FIXTURE PER ELECTRICAL INDICATES TYPE "A"
- LIGHT FIXTURE PER ELECTRICAL INDICATES TYPE "C"
- EXISTING SMOKE DETECTOR REMOVE, CLEAN AND REINSTALL
- SMOKE DETECTOR PER ELECTRICAL
- EXISTING CO DETECTOR REMOVE, CLEAN AND REINSTALL
- EXISTING CEILING DIFFUSER PER MECHANICAL REMOVE, CLEAN AND REINSTALL
- CEILING DIFFUSER PER MECHANICAL
- EXISTING RETURN GRILL PER MECHANICAL REMOVE, CLEAN AND REINSTALL
- RETURN GRILL DIFFUSER PER MECHANICAL

GENERAL NOTES - REFLECTED CEILING PLAN

1. THROUGHLY CLEAN ALL HVAC DEFUSERS, GRILLS AND OTHER EXISTING CEILING MOUNTED DEVICES PRIOR TO REINSTALLATION.
2. INSTALL CEILING GRID CENTERED IN ROOM UNLESS NOTED OTHERWISE
3. INSTALL CEILING GRID AT SAME HEIGHT AS EXISTING GRID UNLESS NOTED OTHERWISE
4. ALL CEILING TILES SHALL BE ACT-1 "FINE FISSURED" IN 2x2 GRID EXCEPT ON ROOM 109 - STORAGE WHICH SHALL BE ACT-2 "CLEAN ROOM VL IN 2x4 GRID

KEYED NOTES - REFLECTED CEILING PLAN

1. EXISTING CEILING TO REMAIN - NO WORK
2. EXISTING GWB BULKHEAD - PAINTED

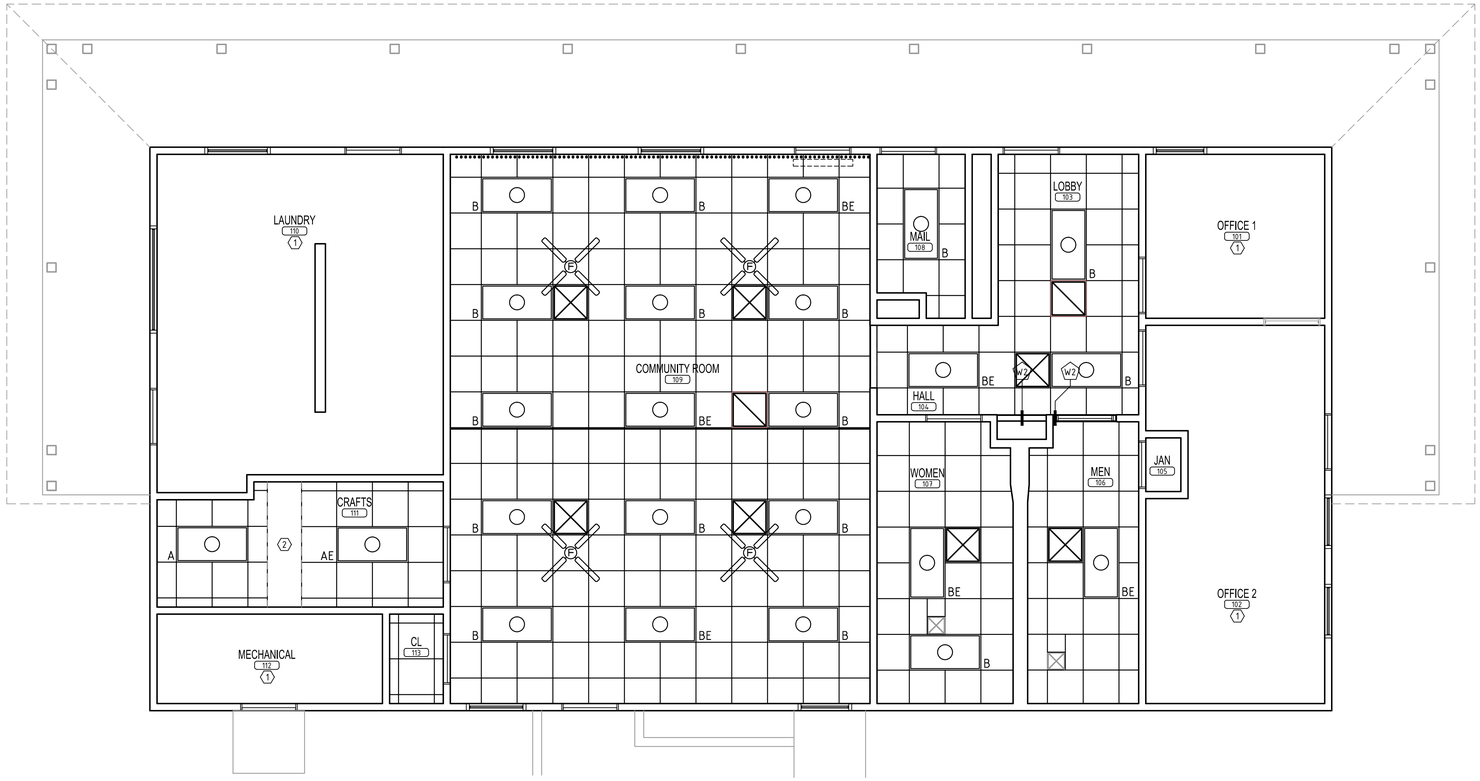

N PROJECT TRUE N

3C REFLECTED CEILING PLAN
1/4"=1'-0"

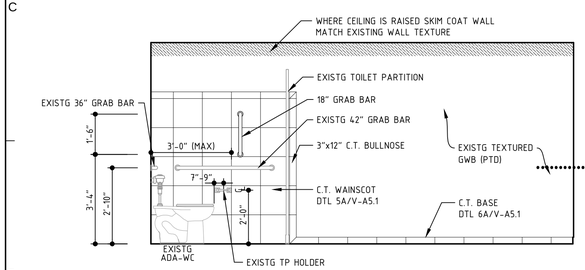

1B ELEVATION - WOMEN 107 (WEST)
1/4"=1'-0"

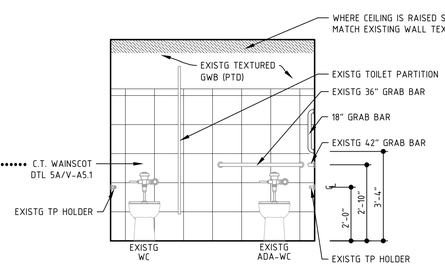

3B ELEVATION - WOMEN 107 (SOUTH)
1/4"=1'-0"

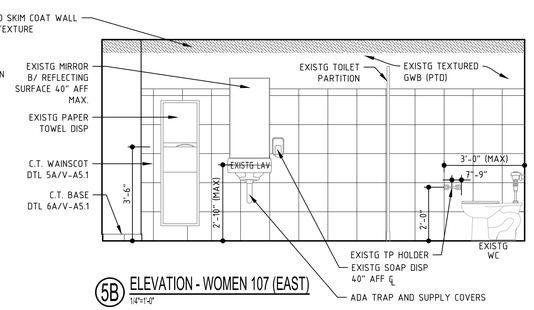

5B ELEVATION - WOMEN 107 (EAST)
1/4"=1'-0"

RESTROOM NOTES:

1. SEE REMOVAL DRAWING FOR ADDITIONAL NOTES.
2. PROVIDE FASTENERS AND OTHER HARDWARE AS REQUIRED TO REINSTALL ACCESSORIES.
3. PROVIDE TOILET SEAL AT DRAIN.
4. MAINTAIN ADA CLEARANCES AND MOUNTING HEIGHTS AS INDICATED.
5. PROVIDE SANITARY SEALANT AT JOINTS BETWEEN ALL FIXTURES AND TILE.
6. AT WALLS NOT SHOWN IN ELEVATION ONLY CERAMIC TILE BASE SHALL BE PROVIDED PER 4A/L-A5.2.

TOILET STALL RETROFIT FOR ADA COMPLIANCE:

1. EXISTING TOILET PARTITIONS ARE MANUFACTURED BY ALL AMERICAN METAL CORP.
2. LATCH: REPLACE LATCH HANDLE IN MEN'S STALL WITH ADA COMPLIANT UNIT TO MATCH WOMEN'S STALL LATCH.
3. HINGES: ADJUST HINGE CAM FOR SELF CLOSING OR REPLACE STALL DOOR HINGES WITH SELF CLOSING UNITS AT MEN'S AND WOMEN'S ADA STALL.
4. PULLS: REPLACE EXTERIOR STALL DOOR PULL WITH INTERIOR/EXTERIOR ADA COMPLIANT PULLS AT MEN'S AND WOMEN'S ADA STALL. 4" CENTERS.
5. COAT HOOK: RELOCATE PARTITION MOUNTED COAT HOOK IN MEN'S ROOM SO THAT TOP OF HOOK IS 48" AFF.

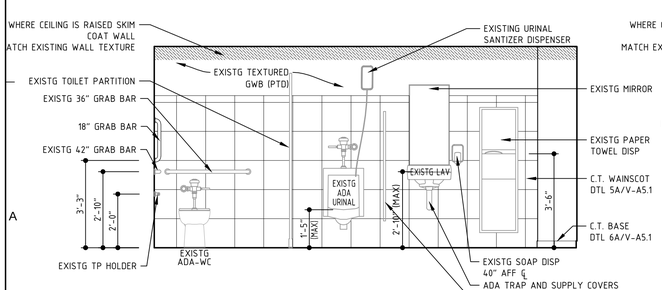

1A ELEVATION - MEN 106 (WEST)
1/4"=1'-0"

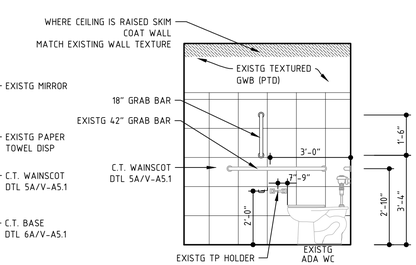

3A ELEVATION - MEN 106 (SOUTH)
1/4"=1'-0"

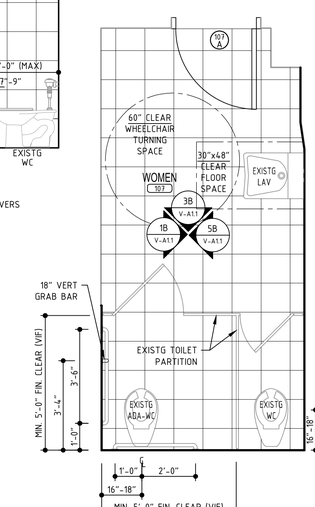

N PROJECT TRUE N

7A PLAN - WOMEN 107
1/4"=1'-0"

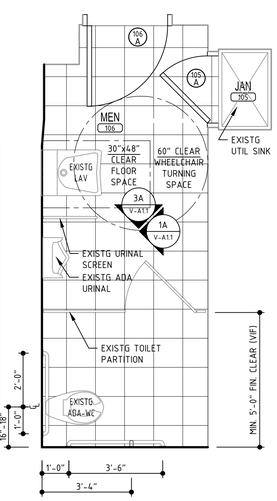

N PROJECT TRUE N

8A ELEVATION - MEN 107
1/4"=1'-0"

STATE OF NEW MEXICO
Alexander C. Dzurec
NO. 003942
11/4/14
REGISTERED ARCHITECT

autotroph
architecture.planning.sustainable design consulting

No.	Description	Date

SENIOR CENTER IMPROVEMENTS

LUISA	VILLA CONSUELO	PASATIEMPO
SENIOR CENTER	SENIOR CENTER	SENIOR CENTER
1500 LUISA STREET	1200 CAMINO CONSUELO STREET	664 ALTA VISTA STREET
SANTA FE, NM 87504	SANTA FE, NM 87504	SANTA FE, NM 87504

VILLA CONSUELO SENIOR CENTER

REFLECTED CEILING PLAN
RESTROOM PLANS

Project number	1310
Date	1 OCTOBER 2014

V-A1.2

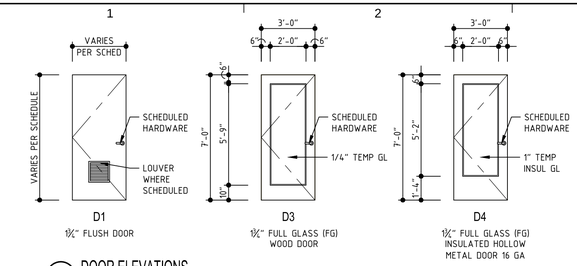

1E DOOR ELEVATIONS
1/4"=1'-0"

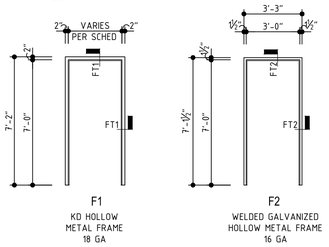

1D DOOR FRAME ELEVATIONS`
1/4"=1'-0"

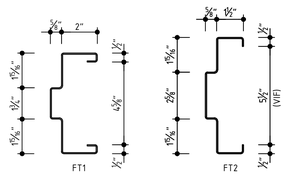

1C HOLLOW METAL FRAME TYPES
3"=1'-0"

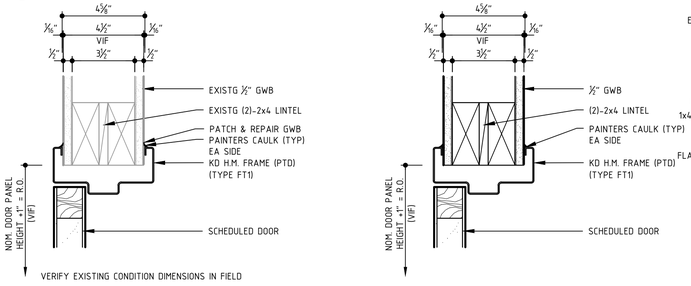

1B SECTION DETAIL - INT. HOLLOW METAL DOOR HEAD
3"=1'-0"

2B SECTION DETAIL - INT. HOLLOW METAL DOOR HEAD
3"=1'-0"

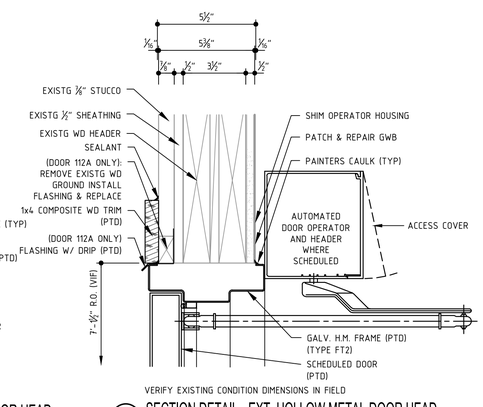

4B SECTION DETAIL - EXT. HOLLOW METAL DOOR HEAD
3"=1'-0"

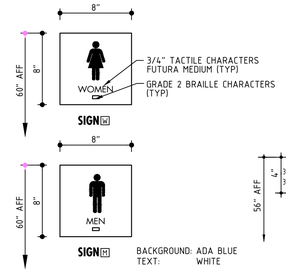

3D RESTROOM SIGNS
1 1/2"=1'-0"

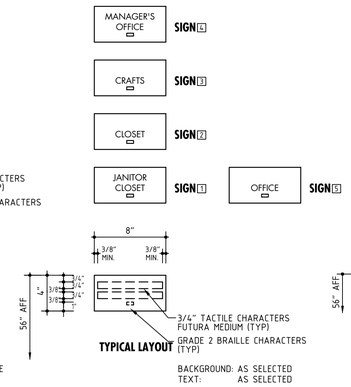

4D ROOM IDENTIFICATION SIGNS
1 1/2"=1'-0"

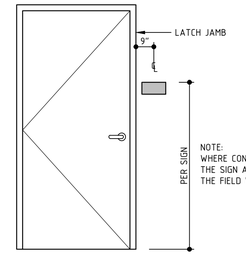

5E SIGN LOCATION DIAGRAM
1 1/2"=1'-0"

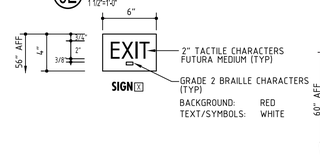

5D EXIT SIGN
1 1/2"=1'-0"

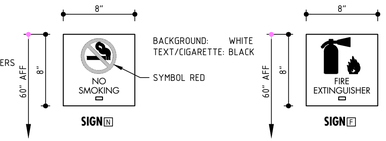

6D NO SMOKING SIGN
1 1/2"=1'-0"

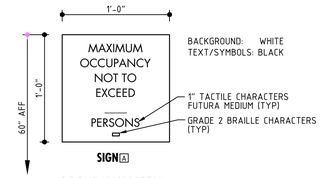

7E OCCUPANCY SIGN
1 1/2"=1'-0"

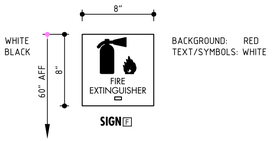

7D FIRE EXTINGUISHER SIGN
1 1/2"=1'-0"

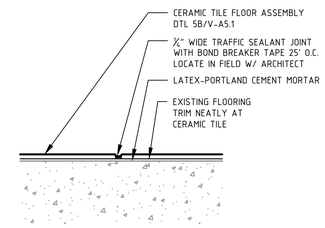

6C ASSEMBLY - CERAMIC TILE MOVEMENT JOINT
3"=1'-0"
TCA ASSEMBLY: EJ171G

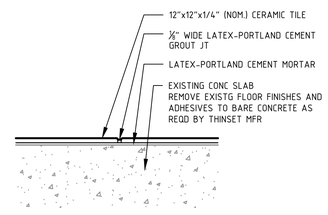

5B ASSEMBLY - CERAMIC TILE @ EXISTING CONCRETE FLOOR
3"=1'-0"
TCA ASSEMBLY: F113

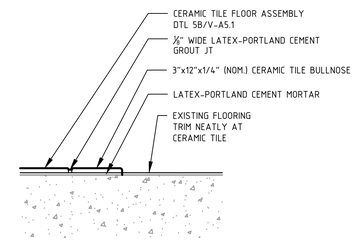

6B ASSEMBLY - CERAMIC TILE TRANSITION
3"=1'-0"
TCA ASSEMBLY: F113

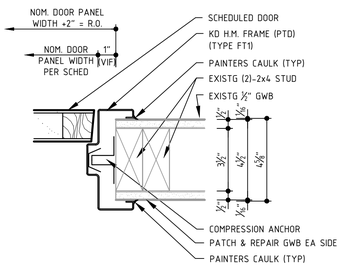

1A PLAN DETAIL - INT. HOLLOW METAL DOOR JAMB
3"=1'-0"

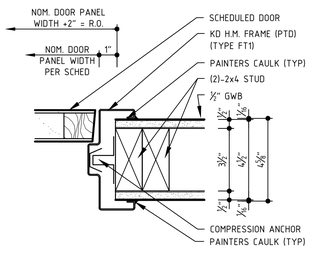

2A PLAN DETAIL - INT. HOLLOW METAL DOOR JAMB
3"=1'-0"

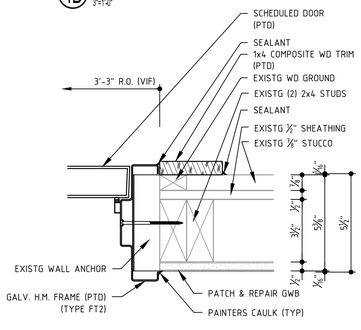

4A PLAN DETAIL - EXT. HOLLOW METAL DOOR JAMB
3"=1'-0"

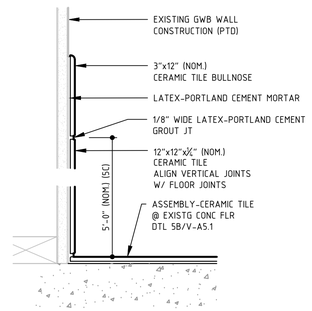

5A ASSEMBLY - CERAMIC TILE WAINSCOT
3"=1'-0"
TCA ASSEMBLY: W243

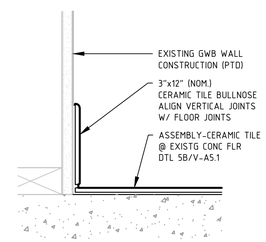

6A ASSEMBLY - CERAMIC BASE
3"=1'-0"

STATE OF NEW MEXICO
Alexander C. Dzurec
NO. 003942
11/4/14
REGISTERED ARCHITECT

autotroph
architecture.planning.sustainable design consulting

No.	Description	Date

SENIOR CENTER IMPROVEMENTS

LUISA	VILLA CONSUELO	PASATIEMPO
SENIOR CENTER	SENIOR CENTER	SENIOR CENTER
1500 LUISA STREET	1200 CAMINO CONSUELO STREET	664 ALTA VISTA STREET
SANTA FE, NM 87504	SANTA FE, NM 87504	SANTA FE, NM 87504

VILLA CONSUELO SENIOR CENTER

DETAILS

Project number 1310
Date 1 OCTOBER 2014

V-A5.1

MECHANICAL LEGEND

HVAC

SYMBOL DOUBLE	SYMBOL SINGLE	DESCRIPTION
		RETURN DUCTWORK UP
		SUPPLY DUCTWORK UP
		EXHAUST DUCTWORK UP
		ROUND DUCTWORK UP
		RETURN DUCTWORK DOWN
		SUPPLY DUCTWORK DOWN
		EXHAUST DUCTWORK DOWN
		ROUND DUCTWORK DOWN
		TRANSITION RECTANGULAR TO RECTANGULAR OR TRANSITION ROUND TO ROUND
		TRANSITION RECTANGULAR TO ROUND
		DUCTWORK ROUTED BELOW OTHER DUCTWORK
		CAPPED DUCTWORK
		EXISTING DUCTWORK
		DUCTWORK TO BE REMOVED
		DUCT WITH INTERNAL LINING
		FIRE SMOKE DAMPER
		MOTORIZED BALANCING DAMPER
		MANUAL BALANCING DAMPER
		BACKDRAFT DAMPER
		CONICAL TAP
		RECTANGULAR TAP
		FLEXIBLE DUCT
		SQUARE SUPPLY AIR DIFFUSER
		ROUND SUPPLY AIR DIFFUSER
		RETURN AIR GRILLE
		CEILING SLOT SUPPLY AIR DIFFUSER
		SIDEWALL RETURN/SUPPLY AIR REGISTER
		FLOOR RETURN/SUPPLY AIR REGISTER
		ACCESS PANEL
	H	HUMIDIFIER

VALVES

SYMBOL	DESCRIPTION
	GATE VALVE
	CHECK VAVLE
	BALL VALVE
	PRESSURE REDUCING VALVE
	OUTSIDE STEM AND YOKE
	GLOBE VALVE
	THREE WAY VALVE
	AUTOMATIC TEMPERATURE CONTROL VALVE
	PLUG VALVE
	BUTTERFLY VALVE
	TWO WAY CONTROL VALVE
	THREE WAY CONTROL VALVE
	DRAIN VALVE
	SOLENOID VALVE
	RELIEF VALVE
	AIR RELIEF VALVE
	STRAINER
	STEM VALVE
	CIRCUIT SETTER OR BALANCING VALVE
	BALANCING, GAS COCK OR GAUGE COCK
	STEAM TRAP
	VALVE IN RISER
	AUTO FLOW CONTROL VALVE

PIPING

SYMBOL	DESCRIPTION
	EXISTING PIPING
	PIPING TO BE REMOVED
—HWS—	HOT WATER SUPPLY PIPING
—HWR—	HOT WATER RETURN PIPING
—CWS—	COLD WATER SUPPLY PIPING
—CWR—	COLD WATER RETURN PIPING
—CHWS—	CHILLED WATER SUPPLY PIPING
—CHWR—	CHILLED WATER RETURN PIPING
—CTS—	COOLING TOWER SUPPLY PIPING
—CTR—	COOLING TOWER RETURN PIPING
—SS—	STEAM SUPPLY PIPING
—SR—	STEAM CONDENSATE RETURN PIPING
—C—	CONDENSATE PIPING
—DR—	EQUIPMENT DRAIN PIPING
—RO—	REVERSE OSMOSIS WATER PIPING
—V—	VENT PIPING

FITTINGS

SYMBOL	DESCRIPTION
	UNION
	TEE
	ELBOW
	ELBOW UP
	ELBOW DOWN
	TEE UP
	TEE DOWN
	BREAK
	CAP
	PRESSURE GAUGE
	THERMOMETER
	FLOW SWITCH
	PRESSURE SWITCH

TEXT SYMBOLS

SYMBOL	DESCRIPTION
#	MECHANICAL KEYED NOTES
	PIPE LEADER LINE FOR SIZES
	POINT OF CONNECTION
	POINT OF DISCONNECTION
###	EQUIPMENT DESIGNATION
### CFM GRILLE A	AIR DEVICE DESIGNATION
#	REVISION DELTA
#X / X#	SECTION NUMBER / SHEET NUMBER
#X / X#	DETAIL DESIGNATION
TYPE LENGTH	BASEBOARD DESIGNATION
##"x##"	RECTANGULAR DUCTWORK SIZING
##"ø	ROUND DUCTWORK SIZING
	ARROW INDICATES DIRECTION OF FLOW
UP	RISE IN DIRECTION OF FLOW
DN	DROP IN DIRECTION OF FLOW
	RETURN AIR FLOW
	SUPPLY AIR FLOW
	EXHAUST AND RETURN AIR FLOW
T	THERMOSTAT
H	SPACE HUMIDISTAT
HS	SPACE HUMIDITY SENSOR
P	SPACE PRESSURE SENSOR
CD	CARBON DIOXIDE SENSOR
CM	CARBON MONOXIDE SENSOR
SD	DUCT MOUNTED SMOKE DETECTOR

NOTE: THIS SYMBOLS LEGEND IS A GENERAL REPRESENTATION OF DEVICES USED. SOME PROJECTS MAY NOT UTILIZE ALL SYMBOLS REPRESENTED. COORDINATE ALL SYMBOLS FROM PLANS.

GENERAL NOTES:

MECHANICAL CONTRACTOR SHALL:

A. PROVIDE AND INSTALL ALL MATERIAL AND EQUIPMENT AS REQUIRED BY UPC, UMC, NFPA, LIFE SAFETY CODE, GAS CODE, AND ALL OTHER LOCAL CODES AND ORDINANCES THAT APPLY WHETHER SHOWN ON THE DRAWINGS OR NOT. WHERE THERE IS A DISCREPANCY BETWEEN THE CODES OR ORDINANCES AND THE DRAWINGS, THE MORE STRINGENT APPLICATION SHALL APPLY.

B. LAYOUT AND INSTALL COMPLETE AND FUNCTIONAL MECHANICAL SYSTEMS, INCLUDING TEMPORARY CUTOFF OF EXISTING UTILITIES, AND ALL CUTTING, PATCHING, AND REPAIR ASSOCIATED WITH INSTALLING THE SYSTEMS.

C. VIBRATIONALLY ISOLATE FROM THE BUILDING STRUCTURE ALL EQUIPMENT AND PIPING IN THE MECHANICAL ROOM, INCLUDING GAS, AIR INTAKE, EXHAUST, ETC. COORDINATE TO ASSURE THAT AS QUIET AN OPERATING SYSTEM AS POSSIBLE IS INSTALLED.

D. INSTALL FREE AREA OF THE DUCT WORK AS SHOWN ON THE DRAWINGS.

E. PROVIDE ALL DUCT WORK CONNECTIONS AND TRANSITIONS AT GRILLES, DIFFUSERS, REGISTERS, FILTERS, COILS, AND OTHER LOCATIONS WHERE REQUIRED. CONSTRUCT ALL TRANSITIONS AND CONNECTIONS ACCORDING TO SMACNA STANDARDS.

F. PROVIDE A TESTING AND BALANCING (T&B)AGENCY. THE T&B AGENCY SHALL BE RESPONSIBLE FOR PROVIDING AND INSTALLING SHEAVES, BALANCING DAMPERS, AND ALL EQUIPMENT NECESSARY TO PROVIDE PLUS OR MINUS 10% OF THE GPM AND/OR 10% OF CFM REQUIRED AT EACH TERMINAL UNIT. NO CHANGE ORDERS WILL BE ALLOWED AS A RESULT OF THE CONTRACTOR'S FAILURE TO PROVIDE EQUIPMENT NECESSARY FOR TEST AND BALANCE WHETHER SHOWN ON THE DRAWINGS OR NOT.

G. COORDINATE WORK WITH THE GENERAL CONTRACTOR TO HAVE THE ROOFTOP EQUIPMENT, DUCT WORK, AND INSULATION JACKETS PAINTED TO THE ARCHITECT'S REQUIREMENTS.

H. INSTALL ALL BOILER ROOM PIPING TO BE PLUMB AND LEVEL. INSULATE PIPING IN CRAWL SPACES, TUNNELS, AND IN MECHANICAL ROOM PER SPECIFICATIONS AND/OR MODEL ENERGY CODE.

I. PROVIDE AND INSTALL ALL MECHANICAL EQUIPMENT, TRANSFORMERS, RELAYS, AND OTHER ELEMENTS NECESSARY FOR A COMPLETE OPERATING SYSTEM. COMPLETE ALL 24 VOLT CONTROL WIRING AND EQUIPMENT TO THE ABOVE. ALL LINE VOLTAGE WIRING TO THE ABOVE SHALL BE COMPLETED BY THE ELECTRICAL CONTRACTOR.

J. ALTER DIMENSIONS OF THE DUCT WORK IN THE CEILING SPACE FROM SIZES INDICATED ON THE DRAWINGS ONLY AT SPECIFIC LOCATIONS WHEN NECESSARY TO FIT THE DUCT WORK IN THE SPACE AVAILABLE. REROUTE DUCT WORK IN CEILING SPACE TO AVOID OTHER MECHANICAL EQUIPMENT, LIGHT FIXTURES, ETC. MAINTAIN THE SAME FREE AREA AND SUBMIT PROPOSED CHANGES TO THE ENGINEER FOR APPROVAL. BE RESPONSIBLE FOR VERIFYING SPACE LIMITATIONS BEFORE DUCT WORK FABRICATION AND SHALL MAKE CHANGES ACCORDINGLY. PROVIDE ALL NECESSARY TRANSITIONS.

K. VERIFY EQUIPMENT SPECIFIED IS CORRECT FOR FIELD APPLICATION INCLUDING BUT NOT LIMITED TO SIZES, LOCATIONS, CLEARANCES, STRUCTURAL CONSISTENCY, ETC. BEFORE ORDERING OR INSTALLING AND SHALL MAKE CHANGES, DELETIONS, OR ADDITIONS TO ANY AND ALL APPLICATIONS THAT APPLY BEFORE ORDERING EQUIPMENT. SUBMIT CHANGES, ADDITIONS AND/OR MODIFICATIONS REQUIRED TO ENGINEER FOR APPROVAL. NO CHANGE ORDERS OR PASSAGE OF LIABILITY BY THE CONTRACTOR(S) WILL BE ALLOWED AS A RESULT OF THE CONTRACTOR(S) FAILURE TO VERIFY EQUIPMENT.

L. COORDINATE ALL PROPOSED ROOF PENETRATIONS WITH GENERAL CONTRACTOR AND ARCHITECT AND RELOCATE IF NECESSARY. COORDINATE WITH GENERAL CONTRACTOR/ARCHITECT/OWNER.

M. PROVIDE ONE UNION AT ALL VALVES.

N. INSTALL CONDENSATE AND OVERFLOW PIPING FROM ALL MECHANICAL EQUIPMENT DRAIN POINTS. EXTEND AND TERMINATE PER UMC/UPC. ALL INTERIOR CONDENSATE AND OVERFLOW PIPING SHALL BE INSULATED PER SPECIFICATIONS FOR APPROPRIATE TEMPERATURE RANGE.

O. ALL BUILDING AND MECHANICAL OPENINGS SHALL BE MADE WEATHER TIGHT AT END OF WORK DAY.

GENERAL DEMOLITION NOTES:

A. BECOME FAMILIAR WITH THE EXISTING CONDITIONS PRIOR SUBMITTING A COMPLETE BID WITHIN THE SCOPE OF THE PLANS AND SPECIFICATIONS. WHEN UNCLEAR, VERIFY THE EXTENT OF REMOVALS PRIOR TO BID. PRIOR TO THE CONCLUSION OF THE ADDENDUM PERIOD IN THE BIDDING TIME FRAME, BRING TO THE ATTENTION OF THE ENGINEER ANY QUESTIONS IN REGARD TO THE EXTENT OF WORK OR ANY OTHER ISSUE RELATING TO THIS PROJECT. WITHOUT ANY CLARIFICATION BEYOND THESE AND THE BID DOCUMENTS, THE SUBMITTAL OF A BID WARRANTS THAT THE BIDDER FULLY UNDERSTANDS THE SCOPE.

B. REMOVE ALL EXISTING MATERIAL AND EQUIPMENT INDICATED AND SALVAGE TO THE OWNER. THE OWNER SHALL HAVE FIRST RIGHTS TO ALL EQUIPMENT TO BE REMOVED. DISPOSE OF ALL EQUIPMENT AND MATERIAL THAT IS NOT WANTED BY OWNER IN AN APPROVED MANNER PER THE LOCAL DICTATING AUTHORITY.

C. WHEN THE EXTENT OF REMOVAL IS UNCLEAR, REQUEST CLARIFICATION FROM ENGINEER PRIOR TO COMMENCING WORK.

D. WHEN MECHANICAL SYSTEMS ARE BEING REMODELED, COVER AND SEAL OPENINGS IN DUCTWORK, PIPING, OR MECHANICAL EQUIPMENT TO REMAIN IN OPERATION THROUGH REMAINDER OF PROJECT.

E. WHEN NOTES CALL FOR "DISCONNECT AND REMOVE" MECHANICAL EQUIPMENT, COORDINATE WITH ELECTRICAL SUBCONTRACTOR TO REMOVE ALL ASSOCIATED WIRE AND EXPOSED CONDUIT TO SOURCE. COORDINATE WITH ELECTRICAL SUBCONTRACTOR FOR THE RE–USE OF EXISTING CONDUITS AND/OR CONDUCTORS WHERE FEASIBLE PROVIDING THAT THEY ARE IN GOOD CONDITION AND COMPLY WITH CURRENT CODES AND STANDARDS.

F. REPAIR ALL DAMAGE TO WALLS, CEILING, ETC. IN A WORKMANLIKE MANNER. SEAL ALL WALL AND CEILING OPENINGS WITH MATCHING MATERIAL.

G. THE LOCATIONS OF EQUIPMENT SHOWN ON THE DRAWINGS IS BASED ON SITE OBSERVATIONS AND THE BEST AVAILABLE INFORMATION AT THE TIME OF DRAWING PREPARATION AND SOME DISCREPANCIES MAY EXIST. VERIFY THE EXACT LOCATIONS OF EQUIPMENT TO BE REMOVED IN THE FIELD AND REQUEST CLARIFICATION FROM ENGINEER WHEN EQUIPMENT LOCATION OR EXISTENCE DIFFERS FROM PLANS.

MECHANICAL & ELECTRICAL ENGINEERING, INC.
PROJECT #14031
SANTA FE:
1222 Luisa St. Suite B
Santa Fe, New Mexico 87505
505/983–2389
ALBUQUERQUE:
8417 Washington Pl., NE
Albuquerque, NM 87113
505/856–1699
P: FP: M: E:

BYRON G. SMITH
NEW MEXICO
21576
PROFESSIONAL ENGINEER
14D3 16 1744

autotroph
architecture.planning.sustainable design consulting

LUISA SENIOR CENTER 1500 LUISA STREET SANTA FE, NM 87504	VILLA CONSUELO SENIOR CENTER 1200 CAMINO CONSUELO STREET SANTA FE, NM 87504
PASATIEMPO SENIOR CENTER 664 ALTA VISTA STREET SANTA FE, NM 87504	

VILLA CONSUELO SENIOR CENTER

MECHANICAL LEGEND AND GENERAL NOTES

Project number	1210
Date	1 OCTOBER 2014
Drawn by	RD
Checked by	KMT,BGS

V-M0.0

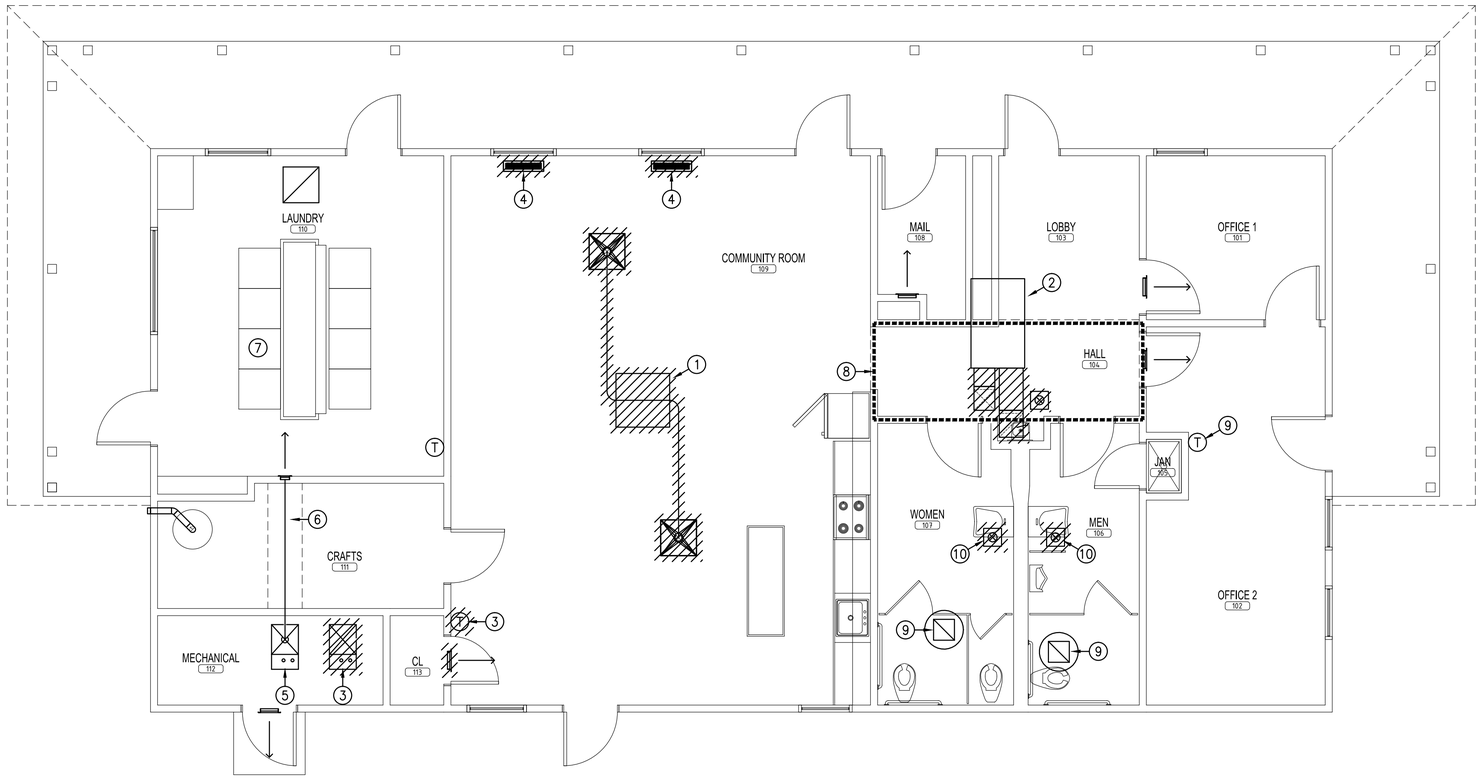

VILLA CONSUELO – MECHANICAL DEMOLITION FLOOR PLAN

SCALE: 1/4" = 1'-0"

GENERAL NOTES:

A. DISCONNECT AND REMOVE ALL EQUIPMENT AS SHOWN BY CROSS HATCHING.

B. REFER TO SHEET V–M0.1 FOR ADDITIONAL INFORMATION ON REQUIREMENTS FOR REMOVAL.

KEYED NOTES: ○

1. DISCONNECT AND REMOVE EXISTING EVAPORATIVE COOLER ON ROOF. MAINTAIN OPENING FOR INSTALLATION OF NEW ROOF TOP UNIT.
2. DISCONNECT AND REMOVE EXISTING ROOF TOOP SUPPLY AND RETURN DUCTWORK. MAINTAIN OPENINGS FOR CONNECTION TO NEW DUCTWORK. REFER TO NEW WORK ON SHEET V–M1.1 FOR ADDITIONAL INFORMATION.
3. DISCONNECT AND REMOVE EXISTING DOWN DISCHARGE UNIT AND ALL ACCESSORIES, CONTROLS, AND DUCTWORK CONNECTIONS. FILL OPENING IN FLOOR WITH CONCRETE WITHIN 4 FEET OF OPENING.
4. REMOVE ALL EXISTING FLOOR DIFFUSERS. FILL OPENING IN FLOOR WITH CONCRETE WITHIN 4 FEET OF OPENING AND PATCH TO MATCH EXISTING FLOOR. REFER TO ATCHITECTURAL SHEETS FOR ADDITIONAL INFORMATION.
5. EXISTING FURNACE TO REMAIN
6. EXISTING CEILING MOUNTED DUCTWORK TO REMAIN.
7. ALL EXISTING MECHANICAL EQUIPMENT IN LAUNDRY ROOM TO REMAIN.
8. DISCONNECT AND REMOVE ALL CEILING MOUNTED DUCTWORK IN THIS LOCATION. EXTENT OF DUCTWORK INSTALLATION IS UNKNOWN AND BASED ON FIELD OBSERVATIONS. COORDINATION WITH ENGINEER AND ARCHITECT FOR RAISING CEILING HEIGHT TO BE PERFORMED IN FIELD.
9. DISCONNECT AND REMOVE EXISTING MECHANICAL EQUIPMENT. MAINTAIN EQUIPMENT FOR REINSTALLATION. REFER TO NEW WORK FOR ADDITIONAL INFORMATION.
10. DISCONNECT AND REMOVE EXISTING DIFFUSER. MAINTAIN DUCTWORK FOR FUTURE CONNECTION.

MECHANICAL & ELECTRICAL ENGINEERING, INC.
PROJECT #14031

SANTA FE:
1222 Luisa St. Suite B
Santa Fe, New Mexico 87505
505/983–2389

ALBUQUERQUE:
8417 Washington Pl., NE
Albuquerque, NM 87113
505/856–1699

P: | FP: | M: | E:

BYRON G. SMITH
NEW MEXICO
21576
PROFESSIONAL ENGINEER
14D3 16 1 14

autotroph
architecture.planning.sustainable design consulting

LUISA
SENIOR CENTER
1500 LUISA STREET
SANTA FE, NM 87504

VILLA CONSUELO
SENIOR CENTER
1200 CAMINO CONSUELO STREET
SANTA FE, NM 87504

PASATIEMPO
SENIOR CENTER
664 ALTA VISTA STREET
SANTA FE, NM 87504

VILLA CONSUELO SENIOR CENTER

MECHANICAL DEMOLITION FLOOR PLAN

Project number	1210
Date	1 OCTOBER 2014
Drawn by	RD
Checked by	KMT,BGS

V-M1.0

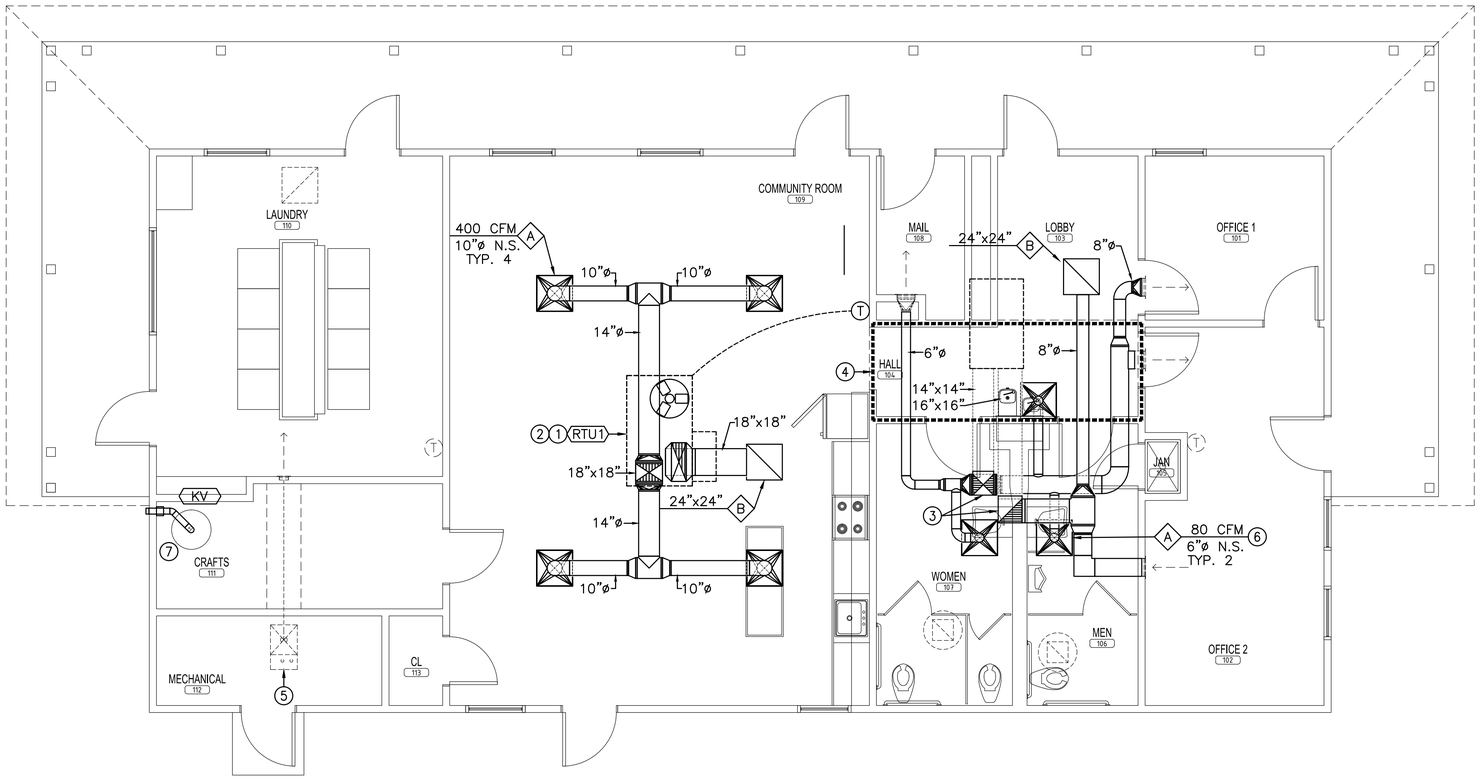

VILLA CONSUELO – MECHANICAL FLOOR PLAN

SCALE: 1/4" = 1'-0"

GENERAL NOTES:

A. INSTALL ALL EXHAUST EQUIPMENT A MINIMUM OF TEN FEET FROM ALL OUTDOOR AIR INTAKE EQUIPMENT AND OPENINGS.

B. INSTALL ALL EQUIPMENT PER MANUFACTURER'S RECOMMENDATIONAS AND SUGGESTIONS.

C. REFER TO MECHANICAL GENERAL NOTES FOR ADDITIONAL INFORMATION ON INSTALLATION.

KEYED NOTES: ○

1. INSTALL NEW ROOF TOP UNIT IN EXISTING ROOF OPENING. REFER TO DEMOLITION SHEET FOR ADDITIONAL INFORMATION.
2. ROUTE NEW SUPPLY AND RETURN DUCTWORK DOWN THROUGH EXISTIN GOPENING AND INTO CEILING SPACE. COORDINATE INSTALLATION OF NEW DIFFUSERS WITH ARCHITECTURAL RCP.
3. RECONNECT NEW DUCTWORK TO EXISTING DUCTWORK ON ROOF AND TO NEW ROOF PENETRATIONS.
4. ROUTE NEW DUCTWORK ACROSS RAISED CEILING. EXTENT OF DUCTWORK INSTALLATION IS UNKNOWN AND BASED ON FIELD OBSERVATIONS. COORDINATION WITH ENGINEER AND ARCHITECT FOR RAISING CEILING HEIGHT TO BE PERFORMED IN FIELD.
5. EXISTING FURNACE UNIT TO REMAIN.
6. CONNECT NEW DIFFUSER TO EXISTING SUPPLY DUCTWORK.
7. PROVIDE NEW KILN VENTILATION KIT. REFER TO MECHANICAL SCHEDULE FOR ADDITIONAL INFORMATION.

MECHANICAL & ELECTRICAL ENGINEERING, INC.
PROJECT #14031

SANTA FE:
1222 Luisa St. Suite B
Santa Fe, New Mexico 87505
505/983-2389

ALBUQUERQUE:
8417 Washington Pl., NE
Albuquerque, NM 87113
505/856-1699

P: | FP: | M: | E:

BYRON G. SMITH
NEW MEXICO
21576
PROFESSIONAL ENGINEER
10/1/14

autotroph
architecture.planning.sustainable design consulting

LUISA SENIOR CENTER 1500 LUISA STREET SANTA FE, NM 87504	VILLA CONSUELO SENIOR CENTER 1200 CAMINO CONSUELO STREET SANTA FE, NM 87504
PASATIEMPO SENIOR CENTER 664 ALTA VISTA STREET SANTA FE, NM 87504	

VILLA CONSUELO SENIOR CENTER

MECHANICAL FLOOR PLAN

Project number	1210
Date	1 OCTOBER 2014
Drawn by	RD
Checked by	KMT,BGS

V-M1.1

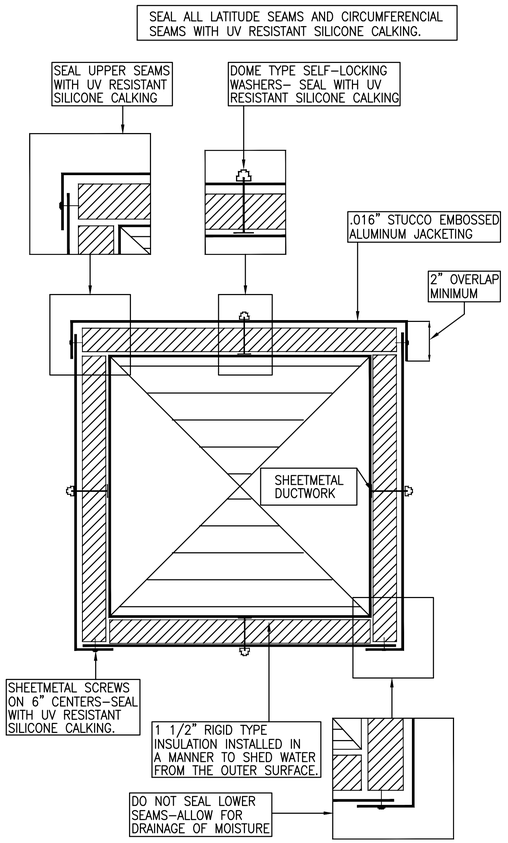

DUCTWORK INSULATION AND METAL JACKETING

NOT TO SCALE

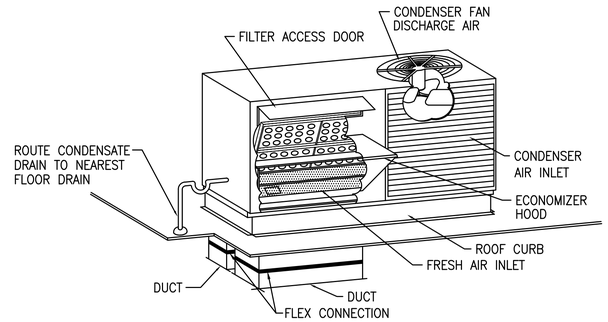

ROOF TOP UNIT DOWN DISCHARGE UNIT

NOT TO SCALE

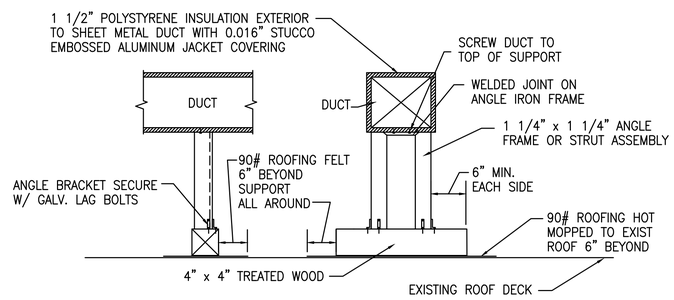

NOTE: DUCT SHALL BE SUPPORTED EVERY 8'-0" MIN.

DUCT SUPPORT ON ROOF DETAIL

NOT TO SCALE

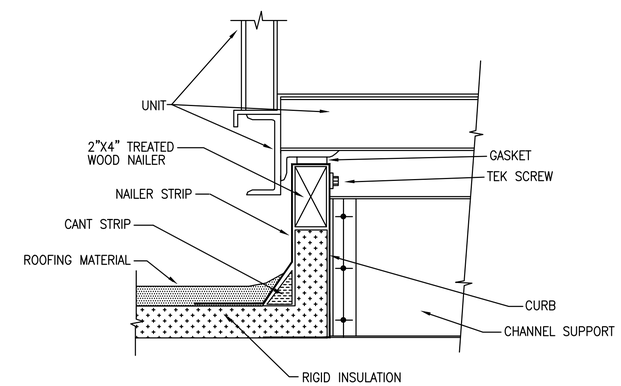

FLASHING CURB DETAIL

NOT TO SCALE

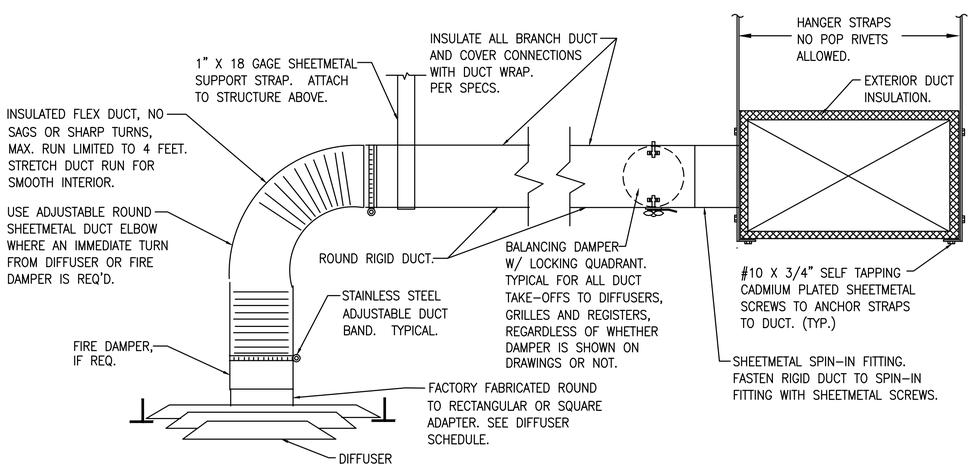

RECTANGULAR DUCTWORK DIFFUSER CONNECTION DETAIL

NOT TO SCALE

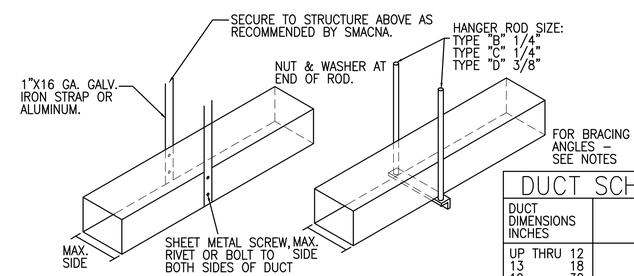

TYPE "A"

8 FT. MAX. HANGER SPACING ALSO PROVIDE 3 HANGERS AT EACH TAKE-OFF OR BRANCH

TYPE "B", "C" & "D"

8 FT. MAX. HANGER SPACING.

DUCT SCHEDULE

DUCT DIMENSIONS INCHES	TYPE HANGER
UP THRU 12	A
13 18	A
19 30	A/B
31 42	B
43 54	B
55 60	B
61 84	C
85 96	C
OVER 96	D

NOTES:

1. FOR SEVERAL DUCTS ON ONE HANGER TYPE "B"-"C" OR "D" MAY BE USED. SIZE OF HANGER WILL BE SELECTED ON THE SUM OF DUCT WIDTHS EQUAL TO MAX. WIDTHOF DUCT SCHEDULE.
2. SCHEDULE FOR ANGLES FOR BRACING: TYPE "B" 1-1/2"X1-1/2"X1/8" ANGLE MAX. SPACING 8'-0" CENTERS; TYPE "C" 1-1/2"X1-1/2"X3/16" ANGLE MAX. SPACING 8'-0" CENTERS; TYPE "D" 2"X2"X1/4" MAX. SPACING 4'-0" CENTERS.

DUCT HANGERS

NOT TO SCALE

MECHANICAL & ELECTRICAL ENGINEERING, INC.
PROJECT #14031
SANTA FE: 1222 Luisa St. Suite B, Santa Fe, New Mexico 87505, 505/983-2389
ALBUQUERQUE: 8417 Washington Pl., NE, Albuquerque, NM 87113, 505/856-1699
P: FP: M: E:

BYRON G. SMITH, NEW MEXICO, 21576, PROFESSIONAL ENGINEER
14D3 16 1/34

autotroph
architecture.planning.sustainable design consulting

LUISA SENIOR CENTER, 1500 LUISA STREET, SANTA FE, NM 87504
VILLA CONSUELO SENIOR CENTER, 1200 CAMINO CONSUELO STREET, SANTA FE, NM 87504
PASATIEMPO SENIOR CENTER, 664 ALTA VISTA STREET, SANTA FE, NM 87504

VILLA CONSUELO SENIOR CENTER

MECHANICAL DETAILS

Project number	1210
Date	1 OCTOBER 2014
Drawn by	RD
Checked by	KMT,BGS

V-M5.0

MECHANICAL EQUIPMENT SCHEDULE:

RTU1

PACKAGED ROOF TOP UNIT: PACKAGED AIR CONDITIONING/HEATING UNIT: NATURAL GAS HEATING, ELECTRIC COOLING, STAINLESS STEEL HEAT EXCHANGER, BELT DRIVEN WITH ADJUSTABLE DRIVE INDOOR FAN, AND DIRECT DRIVE OUTDOOR FAN, SPARK IGNITION PILOT, INDOOR FAN TIME-DELAY RELAY, REDUNDANT GAS VALVE, MODULAR BURNER SECTION, ORIFICE FOR 7200 FT. ASL, INDUCED DRAFT COMBUSTION, COMBUSTION SECTION VIEW PORT, REMOTE SENSING OF PILOT FLAME, HEATING SAFETY CONTROLS (LIMIT SWITCHES, CENTRIFUGAL SWITCH, ROLL OUT SWITCH), STAGGERED COPPER TUBE WITH BONDED ALUMINUM FIN COOLING COILS, R410a REFRIGERANT, LOW AMBIENT TEMP. CONTROLS, RECYCLE TIMER TO PREVENT SHORT CYCLING, ECONOMIZER PACKAGE WITH FACTORY INSTALLED ECONOMIZER CONTROLS, CONDENSER COIL HAIL GUARD ASSEMBLY, 2 IN. THROW-AWAY FILTERS, FILTER RACK, FLEXIBLE DUCT CONNECTIONS, VIBRATION ISOLATORS FOR MOTOR , FACTORY SUPPLIED 14 IN. ROOF CURB, FAN CONTROL, MOTOR, MOTOR STARTER, STAGED HEATING, AND ALL RELAYS, SWITCHES, TRANSFORMERS, FUSES, UNIT MOUNTED DISCONNECT, AND CONTROL EQUIPMENT REQUIRED FOR COMPLETE AND PROPER OPERATION.
ELEC.: 208/1PH/60 HZ.

SYM	"CARRIER" MODEL NO.	CLNG MBH	HTNG OUT MBH	MIN. OA CFM	FAN ESP	CFM	OP. WGT. LBS.	TOTAL UNIT MCA
RTU1	48TCDA04	32.3	40.3	165	0.5	1000	675	28

KV KILN VENT: SUCTION KILN DOWN DRAFT VENTING KIT TO CONNECT TO BOTTOM OF EXISTING KILN. PROVIDE FLEXIBLE DUCT CONNECTION FROM KILN TO FAN, KILN CONNECTOR, FAN CONNECTION TO EXISTING WALL OPENING, 140 CFM EXHAUST RATE, ELECTRICAL CONNECTION, MANUAL SWITCH FOR KILN VENTING OPERATION, SPRING LOADED PLENUM CUP, WALL MOUNTED FAN ASSEMBLY, 8 FEET FLEXIBLE HIGHT TEMP DUCT, 160 DEG F MAXIMUM FAN TEMPERATURE, AND ALL ACCESSORIES AND CONNECTIONS AS REQUIRED FOR CORRECT AND PROPER INSTALLATION AND OPERATION.
"SKUTT" ENVIROVENT 2 VENTILATION SYSTEM.
ELEC: 120V/1PH/60HZ, 1.4 AMPS

T THERMOSTAT: ADAPTIVE INTELLIGENT RECOVERY, ENERGY SAVING, MULTIPLE SETBACK, TEMPORARY OVERRIDE, LCD DISPLAY, BATTERY BACKUP, TRANSFORMER, COOLING SUBBASE, AUTOMATIC CHANGE OVER FROM WINTER TO SUMMER, AND ALL CONTROLS NECESSARY FOR COMPLETE OPERATION. INCLUDE BATTERIES.
"HONEYWELL" T8600.

DIFFUSER, REGISTER, AND GRILLE SCHEDULE:

A SUPPLY AIR DIFFUSER: 24 IN. X 24 IN. PANEL SIZE, ALUMINUM MATERIAL, SQUARE CEILING MOUNTED SUPPLY AIR DIFFUSER WITH TRUE 360 DEG. PATTERN. INCLUDE DAMPER IN DUCT. COLOR #26 WHITE. DUCT SIZE AS SHOWN ON DRAWINGS.
"TITUS" TMSA-AA.

B RETURN AIR GRILLE: FABRICATED ALUMINUM GRILLE WITH 1/2 IN.X 1/2 IN.X 1/2 IN. SQUARES. INCLUDE FRAME FOR CORRECT CEILING INSTALLATION. COORDINATE WITH ARCHITECTURAL DRAWINGS FOR CEILING APPLICATION. COLOR #26 WHITE. SIZE AS SHOWN ON DRAWINGS.
"TITUS" MODEL 50F.

2009 INTERNATIONAL ENERGY CODE COMPLIANCE: Commercial					
Design Standards:	ASHRAE 183-2007		ASHRAE 55-2004		
	ASHRAE 90.1-2007		ASHRAE 15-2007		
	ASHRAE 62.1-2007		UMC-2009		
Location:	Santa Fe, NM		Climate Zone:	5B	
Design Temperatures			Set Points		
Season	Dry Bulb	Wet Bulb	Mode	Occupied	Unoccupied
Summer	88°F db	64°F wb	Heating	68°F	60°F
Winter	8°F	N/A	Cooling	72°F	85°F
Section 503: Building Mechanical System (Mandatory & Prescriptive Method)					
Subsection Number & Title	N/A	Notes:			
503.2.1: Energy Calculations		Performed using Trane Trace.			
503.2.2: Equipment and System Sizing		Matched Trane Trace outputs with unit size available.			
503.2.3: HVAC Equipment Performance		RTU1 SEER 12 or greater.			
503.2.4: HVAC System Controls		Single zone programmable thermostats.			
503.2.5: Ventilation		Meet ASHRAE 62.1 as a minimum.			
503.2.6: Energy Recovery Ventilation	NA				
503.2.7: Duct Insulation and Sealing		R-8 for all exterior ductwork.			
503.2.8: Pipe Insulation	NA				
503.2.9: HVAC System Completion		T&B and O&M reports required.			
503.2.10: Air System Design and Control		All units have minimum 0.5" WC ESP as required.			
503.2.11: Heating Outside a Building	NA				
503.3: Simple HVAC Systems		Single zone programmable thermostats.			
503.4: Complex HVAC Systems	NA				

MECHANICAL / ELECTRICAL RESPONSIBILITY TABLE												
UNIT #	UNIT		DISCONNECT		STARTER/CONTACTOR		CONTROL WIRE		CONTROL CONDUIT		AUTO SHUT-OFF	
	PROVIDED	INSTALLED	PROVIDED	INSTALLED	PROVIDED	INSTALLED	PROVIDED	INSTALLED	PROVIDED	INSTALLED	PROVIDED	INSTALLED
RTU	MC	MC	MC	EC	MC	MC	CC	CC	EC	EC	N/A	N/A
T	MC	MC	N/A	N/A	N/A	N/A	CC	CC	EC	EC	N/A	N/A

MC Mechanical Contractor
EC Electrical Contractor
CC Controls Contractor

MECHANICAL & ELECTRICAL ENGINEERING, INC.
PROJECT #14031

SANTA FE:
1222 Luisa St. Suite B
Santa Fe, New Mexico 87505
505/983-2389

ALBUQUERQUE:
8417 Washington Pl., NE
Albuquerque, NM 87113
505/856-1699

P: FP: M: E:

BYRON G. SMITH
NEW MEXICO
21576
PROFESSIONAL ENGINEER
14-23 10/1/14

autotroph
architecture.planning.sustainable design consulting

LUISA
SENIOR CENTER
1500 LUISA STREET
SANTA FE, NM 87504

VILLA CONSUELO
SENIOR CENTER
1200 CAMINO CONSUELO STREET
SANTA FE, NM 87504

PASATIEMPO
SENIOR CENTER
664 ALTA VISTA STREET
SANTA FE, NM 87504

VILLA CONSUELO SENIOR CENTER

MECHANICAL SCHEDULE

Project number	1210
Date	1 OCTOBER 2014
Drawn by	RD
Checked by	KMT,BGS

V-M6.0

PLUMBING FIXTURE SCHEDULE:

P-1 DRINKING FOUNTAIN, HANDICAPPED: BARRIER-FREE, WALL-MOUNTED, BI LEVEL ONE PIECE STAINLESS STEEL FOUNTAIN WITH SATIN FINISH, COMPLETE WITH WALL STOPS, FRONT PUSH BAR OPERATION, AND ALL ITEMS NECESSARY FOR COMPLETE OPERATION. WALL STOPS SHALL HAVE THREADED INLET AND COMPRESSION OUTLET CONNECTIONS. PROVIDE WALL SUPPORT SYSTEM BY ZURN, NO. Z-1225-BL WITH TOP AND BOTTOM PLATES. INSTALL PER ADA REQUIREMENTS.
ELEC: 120V/1PH/60HZ 15A
"HALSEY-TAYLOR" NO. HACG8BLSS-NF
WASTE = 2 IN., VENT = 1-1/2 IN., CW = 1/2 IN.

PLUMBING GENERAL NOTES:

1. COMPLETE ALL WORK IN FULL COMPLIANCE WITH THE U.P.C., U.M.C., I.B.C., LIFE SAFETY CODE, N.F.P.A., ADA, AND ALL LOCAL CODES AND ORDINANCES.

2. THE CONTRACTOR SHALL BE RESPONSIBLE FOR THE COMPLETE LAYOUT AND INSTALLATION OF THE PLUMBING SYSTEMS INCLUDING ALL COORDINATION WITH NEW AND EXISTING SERVICES, MECHANICAL EQUIPMENT, ELECTRICAL EQUIPMENT, CONDUIT, CEILING, AND ANY OTHER EQUIPMENT THAT MAY REQUIRE COORDINATION EFFORTS. THE CONTRACTOR SHALL ALSO BE RESPONSIBLE FOR COORDINATION OF TEMPORARY CUT-OFF OF WATER, SEWER AND NATURAL GAS WITH OWNER AND FOR ALL NECESSARY TRENCHING, BACKFILLING, CUTTING, PATCHING, REPAIRING, ETC., ASSOCIATED WITH THE INSTALLATION OF THE PLUMBING SYSTEM SHOWN ON THE PLANS AND DESCRIBED IN THE SPECIFICATIONS. THE CONTRACTOR IS RESPONSIBLE FOR COORDINATING THE INSTALLATION OF THE FIXTURES WITH THE LOCAL CODE REQUIREMENTS FOR HANDICAP ACCESSIBILITY.

3. NATURAL GAS PIPING SHALL BE SCHEDULE 40 BLACK STEEL ABOVE GRADE AND SHALL BE SCHEDULE 40 BLACK STEEL WRAPPED WITH SCOTHCHWRAP OR POLYETHYLENE PIPING WHEN BURIED. PIPING SHALL BE PAINTED WHEN EXPOSED.

4. REFER TO PLUMBING FIXTURE SCHEDULE FOR NATURAL GAS SUPPLY LINE SIZES FOR INDIVIDUAL FIXTURES.

5. ROUTE PIPING AS NEARLY AS POSSIBLE TO THE ROUTING INDICATED ON THE PLANS, BUT MAKE MINOR CHANGES IN ROUTING TO ACCOMMODATE THE CONDITIONS AT THE SITE. DO NOT UNDERTAKE MAJOR REROUTING OF PIPING WITHOUT WRITTEN APPROVAL FROM OWNER OR ENGINEER. BE RESPONSIBLE FOR ALL REQUIRED TRANSITIONS, OFFSETS, MINOR RELOCATIONS, AND ALL ASSOCIATED FITTINGS, PIPING, AND EQUIPMENT TO INSTALL A COMPLETE AND OPERATIONAL SYSTEM.

6. ALL CONTRACTORS BIDDING ON THIS PROJECT ARE CAUTIONED TO VISIT THE SITE AND MAKE ALL NECESSARY INQUIRIES TO DETERMINE THE EXISTING CONDITIONS PRIOR TO SUBMITTING THEIR BIDS. NO SUBSEQUENT ALLOWANCE WILL BE MADE TO COMPENSATE FOR LACK OF PRE-BID INSPECTIONS BY THE SUCCESSFUL CONTRACTOR. ANY LINES ENCOUNTERED WHICH MAY INTERFERE WITH NEW CONSTRUCTION SHALL BE RELOCATED IF ACTIVE AND ABANDONED IF INACTIVE BY THIS CONTRACTOR UNDER THIS CONTRACT BY FIRST CONTACTING THE ARCHITECT FOR A RULING AS TO THEIR REMOVAL, RELOCATION, ETC.

7. INSTALL ISOLATION VALVES AND UNIONS AT ALL BRANCH TAKEOFFS. PROVIDE ACCESS PANELS TO ALL INACCESSIBLE PLUMBING EQUIPMENT TO INCLUDE BUT NOT LIMITED TO VALVES, CONTROL VALVES, ETC.

8. PROVIDE GAS COCKS AND FLEXIBLE CONNECTIONS AT EACH GAS OUTLET FOR APPLIANCES AND WATER HEATER.

9. INSTALL CONDENSATE AND OVERFLOW PIPING FROM ALL MECHANICAL EQUIPMENT DRAIN POINTS. EXTEND AND TERMINATE PER UMC/UPC. ALL CONDENSATE AND OVERFLOW PIPING SHALL BE INSULATED PER SPECIFICATIONS FOR APPROPRIATE TEMPERATURE RANGE.

10. INSULATE ALL COLD AND HOT WATER SUPPLY TUBING AND P-TRAPS AT EACH LAVATORY WITH "TRAP-WRAP" BY BROCAR PRODUCTS INC. INCLUDE ALL FITTINGS FOR A COMPLETE INSTALLATION.

PLUMBING LEGEND

CO	CLEANOUT TO GRADE
DCO	DOUBLE CLEANOUT TO GRADE
	VENT PIPING
VTR	VENT THROUGH ROOF
	COLD WATER PIPING
	HOT WATER PIPING
	HOT WATER RECIRCULATING PIPING
------ESS------	EXISTING SANITARY SEWER PIPING
FD	FLOOR DRAIN
TP	TRAP PRIMER
WHA	WATER HAMMER ARRESTOR
	ROOF DRAIN
	POINT OF CONNECTION
WCO	WALL CLEANOUT
FCO	FINISHED FLOOR CLEANOUT

NOTE: THIS SYMBOLS LEGEND IS A GENERAL REPRESENTATION OF ITEMS USED. SOME PROJECTS MAY NOT UTILIZE ALL SYMBOLS REPRESENTED. COORDINATE ALL SYMBOLS FROM PLANS.

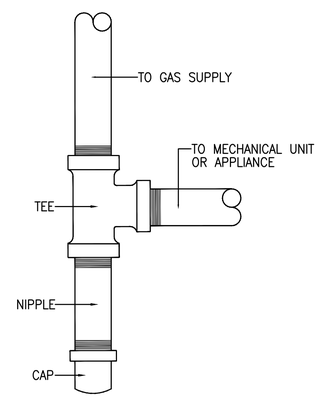

GAS SEDIMENT TRAP DETAIL

NOT TO SCALE

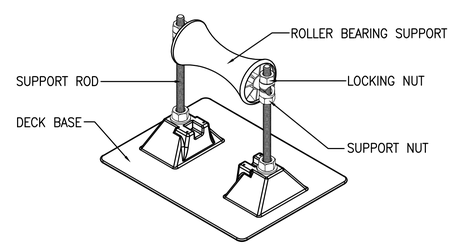

NOTE: PIPING SUPPORTS TO BE INSTALLED EVERY 8'-0"

PIPING SUPPORT DETAIL

NOT TO SCALE

MECHANICAL & ELECTRICAL ENGINEERING, INC.
PROJECT #14031

SANTA FE:
1222 Luisa St. Suite B
Santa Fe, New Mexico 87505
505/983-2389

ALBUQUERQUE:
8417 Washington Pl., NE
Albuquerque, NM 87113
505/856-1699

P:	FP:	M:	E:

BYRON G. SMITH
NEW MEXICO
21576
PROFESSIONAL ENGINEER
14-03 15-14

autotroph
architecture.planning.sustainable design consulting

LUISA SENIOR CENTER 1500 LUISA STREET SANTA FE, NM 87504	VILLA CONSUELO SENIOR CENTER 1200 CAMINO CONSUELO STREET SANTA FE, NM 87504
PASATIEMPO SENIOR CENTER 664 ALTA VISTA STREET SANTA FE, NM 87504	

VILLA CONSUELO SENIOR CENTER

PLUMBING LEGEND AND GENERAL NOTES

Project number	1210
Date	1 OCTOBER 2014
Drawn by	
Checked by	KMT,BGS

V-P0.0

KEYED NOTES: O

13. DISCONNECT EXISTING FLUSH VALVE ASSEMBLY AT HANDICAPPED FIXTURES AND STORE IN PREPARATION FOR RE-INSTALLATION AT SAME LOCATION. EXISTING DOMESTIC WATER SUPPLY PIPING TO BE CAPPED IN WALL. PATCH AND REPAIR WALL TO MATCH EXISTING AND NEW FINISH AFTER NEW WORK HAS BEEN COMPLETED.

GENERAL SHEET NOTES:

A. ALL EXISTING NATURAL GAS SUPPLY PIPING LOCATION, SIZE AND PRESSURE TO BE VERIFIED IN FIELD BEFORE WORK BEGINS.

B. ALL CONDENSATE DRAIN PIPING SIZE AND LOCATION TO BE VERIFIED IN FIELD BEFORE WORK BEGINS.

KEYED NOTES: O

1. EXISTING WATER HEATER TO REMAIN.
2. EXISTING FURNACE TO BE REMOVED. CAP EXISTING NATURAL GAS SUPPLY AND ABANDON.
3. REMOVE EXISTING LAVATORIES AND STORE. TEMPORARILY CAP WASTE PIPING IN PREPARATION FOR INSTALLATION OF NEW TILE AT WALL. EXISTING LAVATORIES TO BE REINSTALLED AT EXISTING LOCATION. COORDINATE WITH ARCHITECTURAL SHEETS FOR ADDITIONAL INFORMATION.
4. EXISTING EVAPORATIVE COOLER TO BE REMOVED. REMOVE EXISTING COLD WATER SUPPLY AT ROOF AND CAP AT MECHANICAL ROOM CONNECTION AND ABANDON.
5. EXISTING FURNACE AND NATURAL GAS PIPING TO REMAIN.
6. EXISTING NATURAL GAS SUPPLY PIPING AT ROOF TO REMAIN. VERIFY EXISTING NATURAL GAS SUPPLY PIPING SIZE, LOCATION AND PRESSURE IN FIELD BEFORE WORK BEGINS.
7. NOT USED.
8. EXISTING DRINKING FOUNTAIN TO BE REMOVED IN PREPARATION FOR INSTALLATION OF NEW DRINKING FOUNTAIN AT SAME LOCATION.
9. EXISTING URINAL AND TOILET TO BE REMOVED AND STORED IN PREPARATION FOR INSTALLATION OF NEW TILE AT FLOOR.
10. TEMPORARILY DISCONNECT EXISTING FURNACE AND WATER HEATER NATURAL GAS SUPPLY PIPING IN PREPARATION FOR INSTALLATION OF NEW NATURAL GAS SUPPLY PIPING.
11. EXISTING NATURAL GAS SUPPLY PIPING AT MECHANICAL ROOM AND ROOF TO BE REMOVED BACK TO EXISTING REGULATOR AT FINISHED GRADE IN PREPARATION FOR INSTALLATION OF NEW NATURAL GAS SUPPLY PIPING.
12. TEMPORARILY CAP EXISTING NATURAL GAS SUPPLY PIPING FOR EXISTING ROOF TOP UNIT AT THIS LOCATION IN PREPARATION FOR CONNECTION TO NEW NATURAL GAS SUPPLY PIPING.

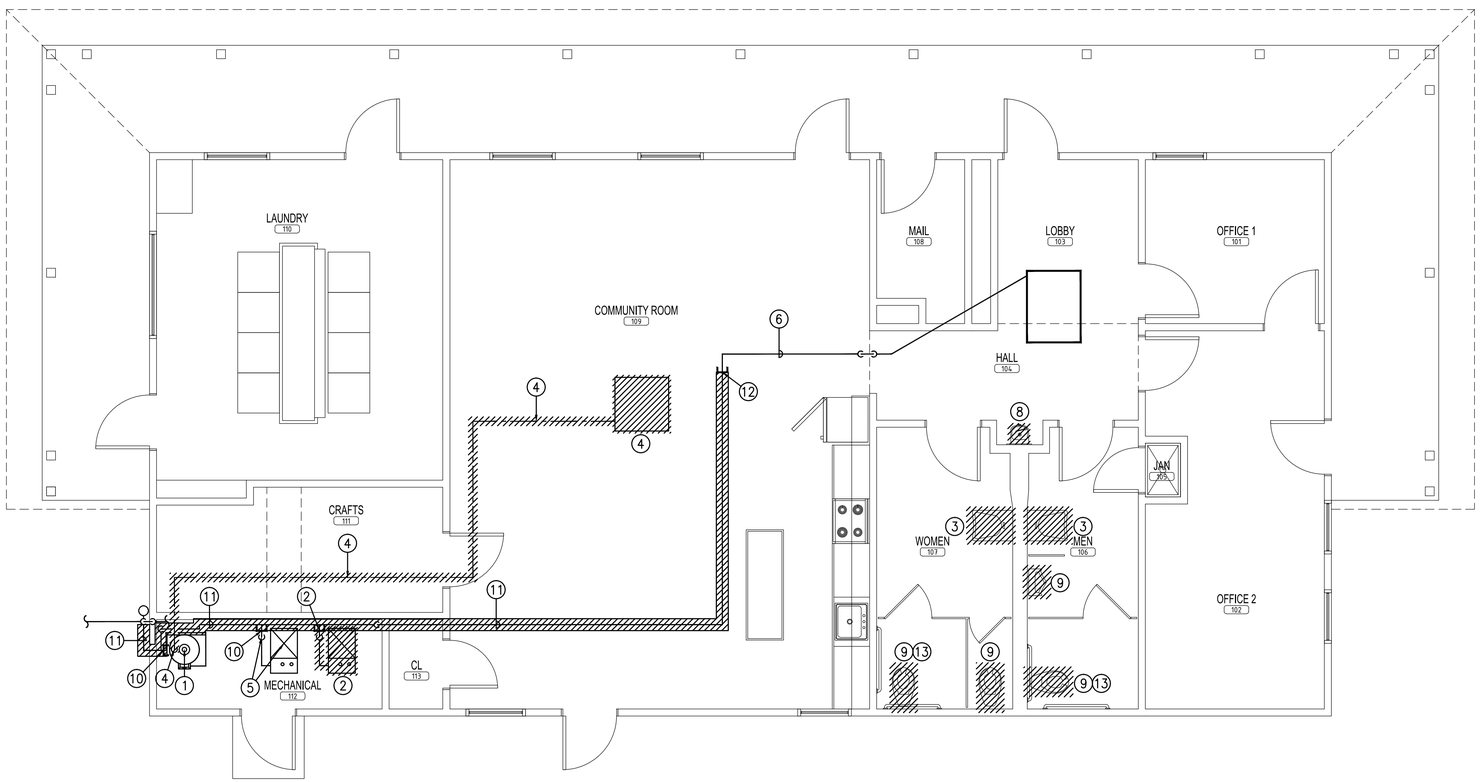

VILLA CONSUELO – PLUMBING DEMOLITION FLOOR PLAN

SCALE: 1/4" = 1'-0"

MECHANICAL & ELECTRICAL ENGINEERING, INC.
PROJECT #14031

SANTA FE:
1222 Luisa St. Suite B
Santa Fe, New Mexico 87505
505/983-2389

ALBUQUERQUE:
8417 Washington Pl., NE
Albuquerque, NM 87113
505/856-1699

P: | FP: | M: | E:

BYRON G. SMITH
NEW MEXICO
21578
PROFESSIONAL ENGINEER
14D3 16 1 14

autotroph
architecture.planning.sustainable design consulting

LUISA
SENIOR CENTER
1500 LUISA STREET
SANTA FE, NM 87504

VILLA CONSUELO
SENIOR CENTER
1200 CAMINO CONSUELO STREET
SANTA FE, NM 87504

PASATIEMPO
SENIOR CENTER
664 ALTA VISTA STREET
SANTA FE, NM 87504

VILLA CONSUELO SENIOR CENTER

PLUMBING DEMOLITION FLOOR PLAN

Project number	1210
Date	1 OCTOBER 2014
Drawn by	
Checked by	KMT,BGS

V-P1.0

KEYED NOTES: O

12. NEW 2 IN. COLD WATER SUPPLY PIPING TO BE CONNECTED TO EXISTING COLD WATER SUPPLY PIPING FOR EXISTING FLUSH VALVE. NEW COLD WATER SUPPLY PIPING TO BE EXTENDED TO OPPOSITE SIDE OF TOILET IN ORDER TO AVOID CONFLICTS WITH GRAB BARS. INSTALL AND CONNECT EXISTING FLUSH VALVE ASSEMBLY TO NEW DOMESTIC WATER SUPPLY AT OPPOSITE SIDE OF EXISTING INSTALLATION.

GENERAL SHEET NOTES:

A. RESTROOMS TO HAVE NEW TILE INSTALLED AT ALL WALLS AND FLOOR. THIS WORK TO BE COMPLETED IN ALTERNATE NO. 1.

KEYED NOTES: O

1. EXISTING WATER HEATER.
2. EXISTING FURNACE.
3. EXISTING NATURAL GAS SUPPLY PIPING AT ROOF. VERIFY EXISTING NATURAL GAS SUPPLY PIPING SIZE, LOCATION AND PRESSURE IN FIELD BEFORE WORK BEGINS. INSTALL NEW ROOF TOP PIPING SUPPORTS AT ALL EXISTING NATURAL GAS SUPPLY PIPING ON ROOF. SEE ROOF TOP SUPPORT DETAIL ON SHEET P0.0 FOR ADDITIONAL INFORMATION.
4. ROUTE AND CONNECT NEW NATURAL GAS SUPPLY PIPING TO EXISTING NATURAL GAS SUPPLY PIPING DOWN STREAM OF EXISTING REGULATOR.
5. ROUTE AND CONNECT NEW NATURAL GAS SUPPLY PIPING TO EXISTING NATURAL GAS SUPPLY FOR EXISTING MECHANICAL UNITS.
6. ROUTE AND CONNECT NEW NATURAL GAS SUPPLY PIPING AT ROOF TO EXISTING NATURAL GAS SUPPLY FOR EXISTING ROOF TOP UNIT.
7. ROUTE CONDENSATE DRAIN PIPING FOR ROOF TOP UNIT BELOW ROOF STRUCTURE AT THIS LOCATION. ROUTE PIPING TO SINK AT JANITORS CLOSET AS SHOWN. SLOPE DRAIN PIPING AT 1/8 IN. PER FOOT TOWARDS OUTLET.
8. INSTALL NEW COVERS ON P-TRAP AND DOMESTIC WATER FOR EXISTING LAVATORIES. SEE PLUMBING GENERAL NOTES ON SHEET P0.0 FOR ADDITIONAL INFORMATION.
9. INSTALL TOILET FLANGE EXTENSION TO ACCOMMODATE NEW TILE THICKNESS TYPICAL AT ALL TOILETS.
10. EXISTING URINAL TO BE REINSTALLED AT EXISTING LOCATION.
11. ALL EXISTING ROOF TOP PIPE SUPPORTS TO BE REMOVED IN PREPARATION FOR INSTALLATION OF NEW ROOF TOP PIPE SUPPORTS. SEE PIPING SUPPORT DETAIL ON SHEET P0.0 FOR ADDITIONAL INFORMATION. INSTALL NEW ROOF TOP SUPPORTS EVERY 8'-0" ON NEW AND EXISTING ROOF TOP PIPING.

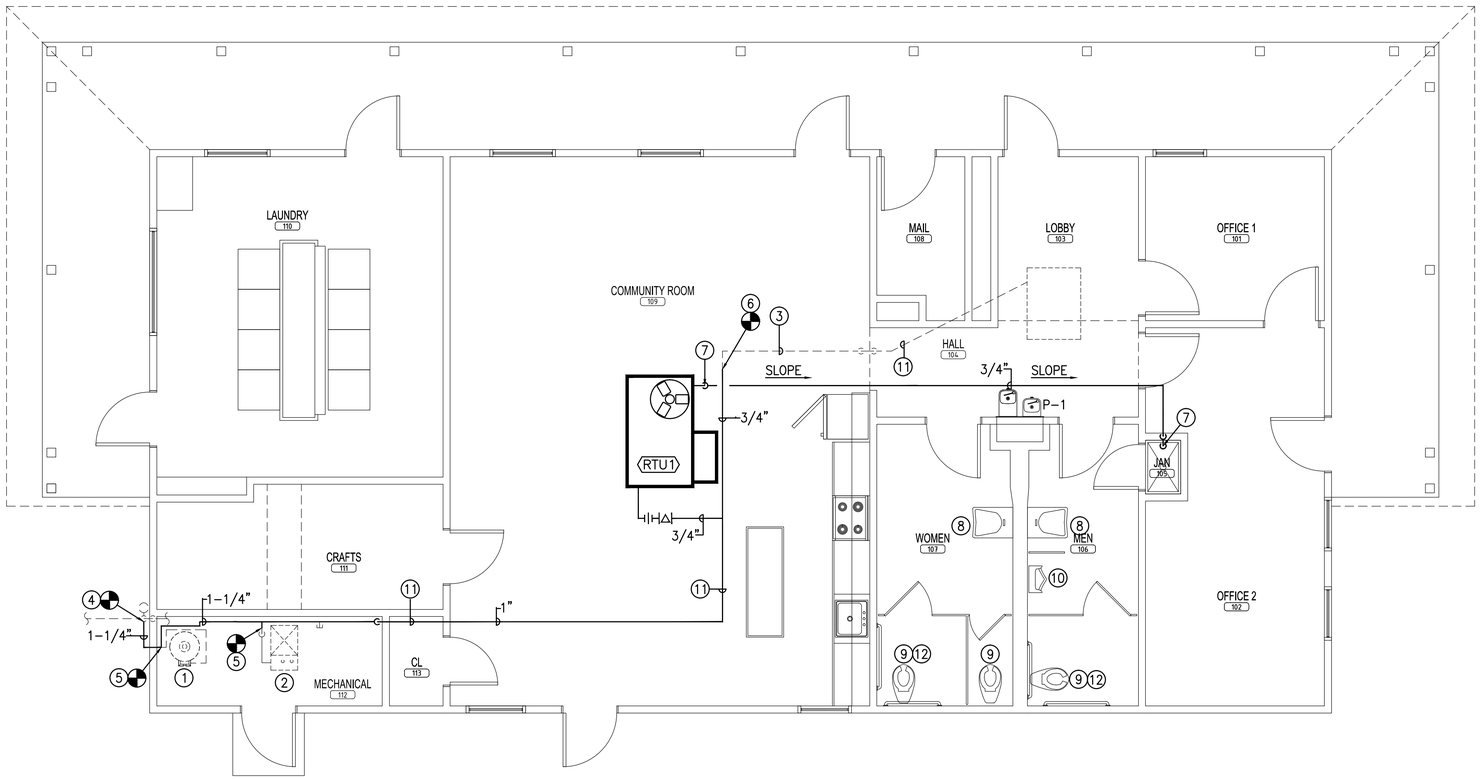

VILLA CONSUELO – PLUMBING FLOOR PLAN

SCALE: 1/4" = 1'-0"

MECHANICAL & ELECTRICAL ENGINEERING, INC.
PROJECT #14031

SANTA FE:
1222 Luisa St. Suite B
Santa Fe, New Mexico 87505
505/983-2389

ALBUQUERQUE:
8417 Washington Pl., NE
Albuquerque, NM 87113
505/856-1699

P: FP: M: E:

BYRON G. SMITH
NEW MEXICO
21576
PROFESSIONAL ENGINEER
10/1/14

autotroph
architecture.planning.sustainable design consulting

LUISA SENIOR CENTER 1500 LUISA STREET SANTA FE, NM 87504	VILLA CONSUELO SENIOR CENTER 1200 CAMINO CONSUELO STREET SANTA FE, NM 87504
PASATIEMPO SENIOR CENTER 664 ALTA VISTA STREET SANTA FE, NM 87504	

VILLA CONSUELO SENIOR CENTER

PLUMBING FLOOR PLAN

Project number	1210
Date	1 OCTOBER 2014
Drawn by	
Checked by	KMT,BGS

V-P1.1

ELECTRICAL SYMBOLS LEGEND

LIGHTING

SYMBOL	DESCRIPTION
	LIGHT (SEE LIGHT FIXTURE SCHEDULE)
	EMERGENCY LIGHT
	STRIP LIGHT
	WALL MOUNTED
	UNDER CABINET
	LIGHTING TRACK
	OUTDOOR POLE MOUNTED
	CEILING SURFACE MOUNTED
	RECESSED DOWNLIGHT
	WALL MOUNTED DOWNLIGHT
	EMERGENCY EXIT
	EMERGENCY EGRESS, 90" AFF
	CEILING FAN
$	SINGLE POLE SWITCH, 42" AFF
3$	THREE WAY SWITCH, 42" AFF
4$	FOUR WAY SWITCH, 40" AFF
WP$	WEATHER PROOF SWITCH, 42" AFF
D$	DIMMER SWITCH, 42" AFF
M$	MOTOR SWITCH, 42" AFF
	PUSH BUTTON SWITCH
TS	TIME SWITCH
LC	LIGHTING CONTACTOR
PC	PHOTO CELL
OS	OCCUPANCY SENSOR
	EXISTING DEVICE SHOWN DASHED

NOTE: THIS SYMBOLS LEGEND IS A GENERAL REPRESENTATION OF DEVICES USED. SOME PROJECTS MAY NOT UTILIZE ALL SYMBOLS REPRESENTED. COORDINATE ALL SYMBOLS FROM PLANS.

POWER

SYMBOL	DESCRIPTION
	DUPLEX RECEPTACLE, 18" AFF
	FOURPLEX RECEPTACLE, 18" AFF
	250V RECEPTACLE, 18" AFF
	DUPLEX RECEPT., 1/2 SWITCH, 18" AFF
GFI	GND FLT INTERRUPT RECEPT., 18" AFF
WP	WEATHER PROOF RECEPTACLE, 18" AFF
	SPECIAL RECEPTACLE
	SINGLE SPECIAL
	DUPLEX SPECIAL
	SIMPLEX RECEPTACLE
	CEILING MOUNTED DUPLEX RECEPTACLE
	FLOOR MOUNTED DUPLEX RECEPTACLE
	CLOCK OUTLET
	SURFACE MOUNTED PLUG RACEWAY
	DISCONNECT SWITCH
T$	THERMAL OVERLOAD SWITCH
	MOTOR OR EXHAUST FAN
P B	PULL BOX
J	CEILING MOUNTED JUNCTION BOX
J	WALL MOUNTED JUNCTION BOX
J	DROP CORD
T	THERMOSTAT OUTLET BOX
	ELECTRICAL PANEL, SURFACE MOUNTED
	ELECTRICAL PANEL, RECESSED MOUNTED
T	PAD MOUNT TRANSFORMER
T	WALL MOUNT TRANSFORMER
	ELECTRICAL KEYED NOTE
	EQUIPMENT SYMBOL
	CONDUIT LEADER LINE FOR SIZES
	BRANCH CIRCUIT HOMERUN
	GROUND
	GROUND ROD
	LIGHTNING ARRESTOR

SPECIAL SYSTEMS

SYMBOL	DESCRIPTION
F	FIRE ALARM PULL BOX, 42" AFF
F	FIRE ALARM STROBE, 90" AFF
F	FIRE ALARM HORN/STROBE, 90" AFF
MDH	FA MAGNETIC DOOR HOLDER
FS	FA FIRE/SMOKE DAMPER
RI	FA REMOTE INDICATOR
FS	FLOW SWITCH
TS	TAMPER SWITCH
	HEAT DETECTOR
	SMOKE DETECTOR
	CEILING SPEAKER
	WALL MOUNTED SPEAKER, 90" AFF
V $	SPEAKER VOLUME CONTROL, 42" AFF
	TELEVISION OUTLET
	SECURITY DIGITAL KEY PAD
	SECURITY INFRARED MOTION SENSOR
D	SECURITY DOOR CONTACTS
	SECURITY CAMERA
	COMMUNICATIONS/DATA OUTLET
	COMMUNICATIONS/DATA OUTLET, IN FLOOR
	TELEPHONE OUTLET
	TELEPHONE OUTLET, IN FLOOR
$	PA CALL SWITCH
	BUZZER
	BELL
M	MICROPHONE, WALL MOUNTED
M	MICROPHONE, FLOOR MOUNTED
	TELEPHONE BACKBOARD
	PANIC BUTTON
	CARD READER
AD	AUTO DIALER
	WIRELESS MICROPHONE TRANSMITTER
	AUDIO MICROPHONE INPUT

PANELBOARD GENERAL NOTES:

A. PANELBOARDS SHALL HAVE, BOLT–IN BREAKERS, AND DOOR–IN–DOOR CONSTRUCTION. ALL SURFACE MOUNTED PANELS IN ANY FINISHED AREAS SHALL BE PROVIDED WITH SKIRTS FLOOR–TO–CEILING (FIELD VERIFY DIMENSIONS), AND ELSEWHERE AS NOTED ON THE PLANS.

B. PANELBOARDS SHALL HAVE TYPED CIRCUIT DIRECTORIES, PLACED BEHIND CLEAR PLASTIC PROTECTIVE COVER. DESIGNATIONS ON DIRECTORY SHALL BE MORE DESCRIPTIVE THAN AS SHOWN ON THE DRAWING PANEL SCHEDULES. "SPARES" AND "SPACES" SHALL BE INDICATED ON DIRECTORY WITH ERASABLE PENCIL (NOT TYPED).

C. PANELBOARDS SHALL BE PROVIDED WITH NAMEPLATES SECURED TO EQUIPMENT WITH STEEL SCREWS. NAMEPLATES SHALL BE LAMINATED PLASTIC WITH ENGRAVED 3/4" MIN. WHITE LETTERS ON BLACK BACKGROUND AND SHALL INDICATE PANEL DESIGNATION, VOLTAGE, PHASE, AND AMPACITY AND LOCATION OF OVERCURRENT PROTECTIVE DEVICE FEEDING PANEL.

D. PANELBOARDS SHALL BE PROVIDED WITH GROUND BUS/GROUND STRIP MOUNTED ON A CLEAN SURFACE OF THE PANELBOARD CAN. GROUND CONDUCTOR SHALL BE PROVIDED TO THE PANELBOARD GROUND BUS FROM THE GROUND SYSTEM IN THE SERVICE ENTRANCE SECTION OF DISTRIBUTION SECTION.

E. PANELBOARDS SHALL HAVE FACTORY FURNISHED CIRCUIT BREAKER NUMBERING. PUNCHED TAPE OR MARKERS WILL NOT BE PERMITTED. BRANCH CIRCUIT BREAKER NUMBER ON PANELBOARDS SHALL MATCH NUMBERING AS SHOWN ON THE PLANS.

F. BRANCH CIRCUIT CONDUCTORS EXTENDING FROM PANELBOARDS TO RESPECTIVE DEVICES SHALL BE COLOR CODED AND SHALL BE INSTALLED CONTINUOUS IN EACH RUN AND SHALL HAVE A TAG DESIGNATING THE BRANCH CIRCUIT NUMBERS LOCATED AT ALL JUNCTION BOXES. THE COLOR CODE SCHEME SHALL BE AS FOLLOWS:

- FOR 120/240V: PHASE A – BLACK, PHASE B –RED,
  NEUTRAL – WHITE, EQUIPMENT GROUND – GREEN

G. PER NEC, ALL BRANCH CIRCUIT PANELBOARDS SHALL BE PROVIDED WITH GFI AND AFCI CIRCUIT BREAKERS FOR APPROPRIATE CIRCUITS. TWO AND THREE POLE CIRCUIT

- BREAKERS SHALL BE PROVIDED FOR MULTIWIRE BRANCH CIRCUITS.
- USE "HACR" BREAKERS FOR HEATING/AIR CONDITIONING LOADS AND "SWD" BREAKERS FOR LIGHTING CIRCUITS.

H. PROVIDE PANELS WITH LUGS/CONNECTIONS SIZED FOR FEEDERS SPECIFIED. FEEDERS MAYBE OVERSIZED PER NEC FOR DERATING FACTORS. COORDINATE FEEDER SIZES WITH EQUIPMENT SUPPLIER PRIOR TO ORDERING.

MECHANICAL GENERAL NOTES:

A. COORDINATE AND PROVIDE ALL POWER NECESSARY FOR MECHANICAL EQUIPMENT AS INDICATED ON THE MECHANICAL AND PLUMBING DRAWINGS.

B. CEILING MOUNTED J_BOXES, DEVICES, AND EQUIPMENT SHOWN FOR SCHEMATIC PURPOSES ONLY. CONTRACTOR SHALL COORDINATE EXACT PLACEMENT OF CEILING MOUNTED EQUIPMENT WITH ALL TRADES WORK IN FIELD WITH CONSIDERATION OF FIELD CONDITIONS TO AVOID CONFLICTS. LOCATION OF ALL DEVICES SHALL BE COORDINATED ARCHITECTURAL DRAWINGS PRIOR TO ROUGH–IN.

C. REFER TO THE CONTROL DIAGRAMS AND RESPONSIBILITY TABLES SHOWN ON THE MECHANICAL DRAWINGS FOR EQUIPMENT AND WIRING TO BE FURNISHED AND INSTALLED BY DIVISION 16 CONTRACTOR. ADDITIONAL COMPENSATION FOR CONTROL AND INTERLOCK WIRING, CONTROL COMPONENTS, AND LACK OF COORDINATION BETWEEN MECHANICAL AND ELECTRICAL WILL NOT BE ALLOWED UNDER ANY CIRCUMSTANCE. THE CONTRACTOR SHALL BE RESPONSIBLE FOR A COMPLETE AND OPERATIONAL MECHANICAL/ELECTRICAL SYSTEM.

D. REFER TO MECHANICAL PLANS FOR EXACT LOCATION OF ALL MECHANICAL EQUIPMENT AND ELECTRICAL CHARACTERISTICS. VERIFY EQUIPMENT LOCATIONS WITH MECHANICAL PRIOR TO ROUGH–IN.

E. AT ALL ACCESS DOOR LOCATIONS FOR MECHANICAL AND ELECTRICAL EQUIPMENT IN HARD CEILING AREAS, PROVIDE A SINGLE POLE SWITCH, DUPLEX RECEPTACLE AND KEYLESS PORCELAIN SOCKET WITH 1–A19/IF, 100 WATT LAMP AND WIRE GUARD PER NEC REQUIREMENTS. COORDINATE WITH MECHANICAL.

F. ALL CONDUIT SHALL BE CONCEALED IN WALLS AND ABOVE CEILINGS. EXPOSED CONDUIT AND CONDUIT INSTALLED ON THE ROOF WILL NOT BE APPROVED UNDER ANY CIRCUMSTANCE.

G. MOUNT DISCONNECT SWITCH IN CONVENIENT LOCATION AT UNIT, PER NEC. COORDINATE LOCATION OF CONTROLS WITH MECHANICAL PRIOR TO CONDUIT ROUGH–IN. PROVIDE DISCONNECT SWITCH WITH EQUIPMENT GROUND BUS AND TERMINATE ALL EQUIPMENT GROUNDING CONDUCTORS AT DISCONNECT SWITCH EQUIPMENT GROUND BUS (DO NOT USE SCREW OR SINGLE LUG FOR EQUIPMENT GROUND CONNECTION). PROVIDE WEATHER_TIGHT FLEXIBLE CONDUIT CONNECTION FROM DISCONNECT SWITCH TO UNIT (NO EXCEPTIONS). ALL CONDUIT SHALL BE CONCEALED AS MUCH AS POSSIBLE FROM THE DISCONNECT SWITCH TO THE PANEL INDICATED. DISCONNECT SWITCH SHALL BE PROVIDED WITH ENGRAVED MICARTA NAMEPLATE INDICATING PANEL AND BRANCH CIRCUIT CONNECTED TO. COORDINATE MOTOR HORSEPOWER OF UNIT, VOLTAGE AND PHASE FOR SERVICE PROVIDED WITH MECHANICAL TO AVOID CONFLICTS IN THE FIELD.

DEMOLITION NOTES:

THESE NOTES SHALL APPLY TO DEMOLITION AREAS, RENOVATED NEW WORK AREAS AND ENTIRE PROJECT.

A. BECOME FAMILIAR WITH THE EXISTING CONDITIONS PRIOR SUBMITTING A COMPLETE PRICE WITHIN THE SCOPE OF THE PLANS AND SPECIFICATIONS. VERIFY THE EXTENT OF DEMOLITION AND REMOVALS PRIOR TO PRICING. INCLUDE ALL WORK REQUIRED TO COMPLETELY DISCONNECT ASSOCIATED EQUIPMENT AND TO COMPLETELY REMOVE ALL ASSOCIATED BRANCH CIRCUIT WIRING, WHERE REQUIRED. WHEN UNCLEAR, ANY QUESTIONS ARISING DURING THE PRICING PERIOD IN REGARD TO THE EXTENT OF WORK OR ANY OTHER ISSUE RELATING TO THIS PROJECT SHALL BE BROUGHT TO THE ATTENTION OF THE ENGINEER, NOT AFTER THE PROJECT HAS BEEN AWARDED. PRIOR TO THE CONCLUSION OF THE ADDENDUM PERIOD IN THE PRICING TIME FRAME, WITHOUT ANY CLARIFICATION BEYOND THESE AND THE PRICING DOCUMENTS, THE SUBMITTAL OF A PRICING WARRANTS THAT THE BIDDER FULLY UNDERSTANDS THE SCOPE

B. REMOVE ALL EXISTING MATERIAL AND EQUIPMENT INDICATED AND SALVAGE TO THE OWNER. THE OWNER SHALL HAVE FIRST RIGHT OF REFUSAL ON ELECTRICAL EQUIPMENT TO BE REMOVED. ALL EQUIPMENT REMOVED, NOT CLAIMED BY THE OWNER, SHALL BECOME THE PROPERTY OF THE CONTRACTOR AND BE PROPERLY DISPOSED OF. ALL EQUIPMENT THAT HAS BEEN REMOVED TO BE DISPOSED OF IN A APPROVED MANNER PER THE LOCAL AUTHORITY HAVING JURISDICTION.

C. DAMAGE TO WALLS, CEILING, FLOOR, ETC. SHALL BE REPAIRED IN A PROFESSIONAL MANNER WITH MATCHING FINISH MATERIAL. SEAL ALL WALL AND CEILING, ROOF, AND FOUNDATION OPENINGS.

D. THE LOCATIONS OF EQUIPMENT SHOWN ON THE DRAWINGS IS BASED ON SITE VISITS AND THE BEST AVAILABLE INFORMATION AT THE TIME OF DESIGN. SOME DISCREPANCIES MAY EXIST. NOT ALL BUILDING DETAILS AND BRANCH CIRCUIT CONDUIT/WIRING TO BE REMOVED ARE MAY NOT ALL BE SHOWN ON THE PLANS. VERIFY THE EXACT LOCATIONS OF EQUIPMENT TO BE REMOVED IN THE FIELD. THE CONTRACTOR MAY REVIEW EXISTING ELECTRICAL, MECHANICAL, AND ARCHITECTURAL PLANS, THAT ARE AVAILABLE AFTER PRICING IS AWARDED.

E. DURING DEMOLITION OR WHEN ELECTRICAL SYSTEMS ARE BEING MODIFIED, COVER AND SEAL AND PROTECT EXISTING EQUIPMENT NOT BEING REMOVED FROM DAMAGE. THIS APPLIES TO ALL NEW EQUIPMENT AND SYSTEMS WHICH WILL CONTINUE TO BE OPERATED AT COMPLETION OF THE WORK.

F. COORDINATE DEMOLITION FOR EXISTING ELECTRICAL EQUIPMENT BEING REMOVED. ALL ELECTRICAL EQUIPMENT DOWNSTREAM, WHICH REMAINS, AND OUT OF THE DEMOLITION AREA, SHALL REMAIN "ON" AT ALL TIMES. MAINTAIN THE EXISTING CIRCUIT CONTINUITY FOR ALL REMAINING ELECTRICAL DEVICES. COORDINATE GENERAL DEMOLITION WITH THE OWNER TO AVOID PROBLEMS WITH CIRCUIT BEING DISCONNECTED AND REMOVED WHICH MAY AFFECT OTHER AREAS OUTSIDE OF THE WORK AREA. COORDINATE IN FIELD.

G. SURVEY SPACES ABOVE CEILING FOR DEFICIENT EXISTING ELECTRICAL EQUIPMENT. THIS REMEDIAL ABOVE CEILING WORK MAY INCLUDE PROVIDING ADEQUATE CONDUIT SUPPORTS, REPLACING CODE DEFICIENT FLEXIBLE ELECTRICAL POWER CABLE, PROVIDING MISSING JUNCTION BOX COVERS, REPAIRING BROKEN OR SEPARATED CONDUIT, AND PROVIDING EXTENSION RINGS FOR OVER–CROWDED JUNCTION BOXES. ALL THIS WORK SHALL BE INCLUDED IN THE PRICE.

H. RESOLVE DEFICIENT SPECIAL SYSTEMS CABLE RELATED WORK IN EXPOSED CEILING AREAS. THIS MAY INCLUDE ITEMS SUCH AS SUPPORT OF EXISTING CABLE AND REPLACEMENT OF CABLE WITH NEW PLENUM RATED AND CODE COMPLIANT CABLE. ALL THIS WORK SHALL BE INCLUDED IN THE PRICE.

I. PROVIDE DISCONNECTION AND RECONNECTION OF BRANCH CIRCUITS AND REPLACEMENT OF ELECTRICAL MATERIALS AND LABOR TO RESTORE COMPLETE AND OPERATIONAL SYSTEMS. THIS INCLUDES THE CORRECTION OF ANY CODE DEFICIENCIES RELATED TO RENOVATIONS ON THIS PROJECT. ALL THIS WORK SHALL BE INCLUDED IN THE BID PRICE.

J. WHEN THE EXTENT OF REMOVAL IS UNCLEAR, REQUEST CLARIFICATION FROM ENGINEER PRIOR TO COMMENCING WORK.

K. ADDITIONAL DEMOLITION MAY BE REQUIRED TO COMPLETE THE WORK AS INDICATED ON THE DRAWINGS. DEMOLITION REQUIRED TO COMPLETE THE PROJECT WORK, BUT NOT INDICATED, SHALL BE INCLUDED IN THE CONTRACT SUM.

LIGHTING GENERAL NOTES:

A. COORDINATE THE EXACT LOCATIONS OF ALL CEILING MOUNTED LIGHT FIXTURES WITH THE ARCHITECTURAL REFLECTED CEILING PLAN AND ALL OTHER TRADES WORK. NOTIFY ARCHITECT AND ENGINEER IMMEDIATELY FOR CONFLICTS OF LOCATIONS.

B. EMERGENCY LIGHT FIXTURES SHALL BE MOUNTED MAXIMUM 10'–0" AFF.

GENERAL NOTES:

A. THE ELECTRICAL CONTRACTOR SHALL BE RESPONSIBLE FOR COORDINATING AND PROVIDING ALL WORK INDICATED BY THESE DRAWINGS. THIS CONSISTS OF FURNISHING ALL LABOR, EQUIPMENT, SUPPLIES AND MATERIALS IN ADDITION TO PERFORMING ALL OPERATIONS INCLUDING CUTTING, CHANNELING AND UNDERGROUND TRENCHING NECESSARY FOR THE INSTALLATION OF COMPLETE POWER, LIGHTING , OR OTHER SYSTEMS AS SHOWN.

B. PERFORM ALL ELECTRICAL WORK IN A NEAT AND WORKMANLIKE MANNER IN FULL COMPLIANCE WITH ALL APPLICABLE CODES AND THE NATIONAL ELECTRICAL CODE (NEC). ALL LOCAL AND STATE REQUIREMENTS WILL BE OBSERVED DURING THE PERFORMANCE OF THIS WORK.

C. SHOULD THE CONTRACTOR DETECT ANY DISCREPANCIES BETWEEN CONTRACT DOCUMENTS AND LEGAL OR SAFETY REQUIREMENTS FOR THE PROJECT, HE SHALL PROMPTLY NOTIFY THE ENGINEER IN WRITING. ONCE NOTIFIED THE ENGINEER SHALL MODIFY THE CONTRACT DOCUMENTS ACCORDINGLY. IF THE CONTRACTOR PROCEEDS WITH ANY WORK WHICH IS IN VARIANCE OF KNOWN LEGAL OR SAFETY REQUIREMENTS, THE CONTRACTOR SHALL ASSUME RESPONSIBILITY FOR THIS WORK AND SHALL PROMPTLY CORRECT THE WORK WHEN NOTIFIED WITHOUT ADDITIONAL COST TO THE OWNER.

D. FIELD VERIFY EXISTING CONDITIONS PRIOR TO COMMENCING WORK. NOTIFY THE ENGINEER OF ANY DISCREPANCIES BEFORE PROCEEDING WITH DEMOLITION. NO CLAIM FOR ADDITIONAL COST OR TIME EXTENSION WILL BE ALLOWED WITHOUT PROPER NOTICE PLUS PRIOR DETERMINATION OF TIME AND COST TO THE OWNER.

E. ANY DAMAGE ON THE CONSTRUCTION SITE CAUSED BY THE CONTRACTOR OR A PARTY TO THE CONTRACTOR SHALL BE REPAIRED PRIOR TO CONTRACT DATE OF SUBSTANTIAL COMPLETION AT NO ADDITIONAL EXPENSE TO THE OWNER.

F. EXTEND ALL CONDUIT AND CONDUCTORS, INSTALL ELECTRICAL EQUIPMENT AS NECESSARY, AND MAKE ALL FINAL CONNECTIONS TO MECHANICAL AND OWNER FURNISHED EQUIPMENT. LEAVE ALL EQUIPMENT IN OPERABLE CONDITION WITH APPROPRIATE OVERLOAD AND SERVICE DISCONNECT PROTECTION AS REQUIRED BY THE APPLICABLE CODES. FOLLOW MANUFACTURER INSTALLATION GUIDELINES WHERE APPLICABLE.

G. ALL CONDUCTORS SHALL BE COPPER, RATED FOR 600 VOLTS WITH TYPE THHN/THWN, 90 DEGREE INSULATION UNLESS OTHERWISE INDICATED. CONDUCTORS SHALL BE SOLID FOR #12 AWG AND STRANDED FOR #10 AWG OR LARGER. ALL WIRING SHALL BE RUN IN CONDUIT.

H. GENERALLY, CONDUIT SHALL BE EMT, 3/4 INCH MINIMUM. WHERE REQUIRED TO PROTECT FROM PHYSICAL DAMAGE, CONDUIT SHALL BE RIGID OR IMC TYPE. RUN CONDUIT CONCEALED UNLESS OTHERWISE SHOWN ON THE DRAWINGS. USE FLEXIBLE METALLIC CONDUIT OR SURFACE MOUNTED RACEWAY ONLY WHERE INDICATED. PROVIDE EXPANSION FITTINGS FOR CONDUIT CROSSING EXPANSION JOINTS.

I. SUPPORT ALL CONDUIT INDEPENDENTLY FROM THE BUILDING STRUCTURE. DO NOT SUPPORT FROM VENTILATION DUCTS, MECHANICAL PIPING, SUSPENDED CEILING GRIDS, OR THEIR HANGERS. USE ACCEPTABLE METHODS OF SUPPORT.

J. PROVIDE WIRING DEVICES RATED FOR THE GIVEN APPLICATION AS REQUIRED BY CODE. SPECIAL DEVICES SHALL BE PROVIDED AS INDICATED.

K. MAKE MAIN FEEDER CONNECTIONS WITH SOLDERLESS, BOLTED TYPE CONNECTORS AND MAKE SMALLER WIRE SPLICES WITH PRESSURE TYPE CONNECTORS.

L. INSTALL EXTERIOR WIRING AND DEVICES IN CONDUIT WITH WEATHERPROOF FITTINGS AND IN WEATHERPROOF BOXES. EQUIPMENT SHALL BE RATED FOR EXTERIOR USE.

M. SIZE ALL BOXES AND ENCLOSURES PER THE NEC. PROVIDE WORKING SPACE FOR ELECTRICAL INSTALLATIONS IN ACCORDANCE WITH NEC, ARTICLE 110.

N. MAINTAIN A MINIMUM OF 24 INCH SEPARATION BETWEEN POWER CONDUITS AND SIGNAL CONDUITS AS PRACTICAL. ROUTE CONDUITS TO NOT CROSS EACH OTHER.

O. AFTER COMPLETION OF THE INSTALLATION, THE ENTIRE SYSTEM SHALL BE THOROUGHLY CLEANED. REMOVE ALL FOREIGN MATTER, PAINT, OIL, DIRT, GREASE, UNNEEDED LABELS OR STICKERS FROM FIXTURES AND EQUIPMENT. REMOVE ALL RUBBISH AND DEBRIS ACCUMULATED DURING INSTALLATION FROM THE PREMISES.

P. NEW WORK DEVICES SHALL BE FLUSH IN WALLS CONDUIT/WIRING SHALL BE CONCEALED. ROUTING OF FEEDERS AND MATERIALS USED FOR DEVICES IN WALLS SHALL BE APPROVED BY ARCHITECT AND ENGINEER PRIOR TO ROUGH IN. REPAIR AND GROUT AROUND NEW J–BOXES AND FINISH AS NECESSARY TO MATCH FINISH. COORDINATE WITH ARCHITECT IN FIELD PRIOR TO ROUGH–IN TO AVOID CONFLICTS.

Q. COORDINATE FINAL LOCATION OF ALL CONDUIT/FEEDERS, PANELS, AND CONTROL PANELS WITH ENGINEER, OWNER, ARCHITECT, AND ALL TRADES PRIOR TO BEGINNING ANY ROUGH–IN WORK. PROVIDE WORKING CLEARANCES PER NEC. COORDINATE ROUTING OF FEEDERS WITHIN WALL CAVITIES OR CHASES. VERIFY CONDUIT ROUTING PRIOR TO ROUGH–IN

MECHANICAL & ELECTRICAL ENGINEERING, INC.
PROJECT #14031

SANTA FE:
1222 Luisa St. Suite B
Santa Fe, New Mexico 87505
505/983–2389

ALBUQUERQUE:
8417 Washington Pl., NE
Albuquerque, NM 87113
505/856–1699

P: FP: M: E:

9-30-14
KARL M. TIPTON
NEW MEXICO
21200
PROFESSIONAL ENGINEER

autotroph
architecture.planning.sustainable design consulting

LUISA SENIOR CENTER 1500 LUISA STREET SANTA FE, NM 87504	VILLA CONSUELO SENIOR CENTER 1200 CAMINO CONSUELO STREET SANTA FE, NM 87504
PASATIEMPO SENIOR CENTER 664 ALTA VISTA STREET SANTA FE, NM 87504	

VILLA CONSUELO SENIOR CENTER

ELECTRICAL LEGEND AND GENERAL NOTES

Project number	1210
Date	1 OCTOBER 2014
Drawn by	
Checked by	KMT,BGS

V-E0.0

GENERAL NOTES:

A. FIELD COORDINATE EXACT LIGHTING FIXTURE LOCATION AND MOUNTING HEIGHTS.

B. TEMPORARILY REMOVE ALL EXISTING CEILING MOUNTED SMOKE DETECTORS AND EMERGENCY LIGHTING. TEMPORARILY CAP FEEDERS FOR FUTURE REINSTALLATION. SEE NEW WORK PLAN FOR REINSTALLATION.

KEYED NOTES: ◇

1. REMOVE EXISTING LIGHT FIXTURE AND SALVAGE TO OWNER.
2. TEMPORARILY CAP FEEDERS AND SWITCHING FOR FUTURE REUSE. SEE NEW WORK PLAN FOR NEW FIXTURE TYPES AND LOCATION.
3. NO WORK IN THIS LOCATION, SHOWN FOR REFERENCE ONLY.
4. REMOVE EXISTING CEILING FANS, SALVAGE FANS FOR FUTURE REUSE.

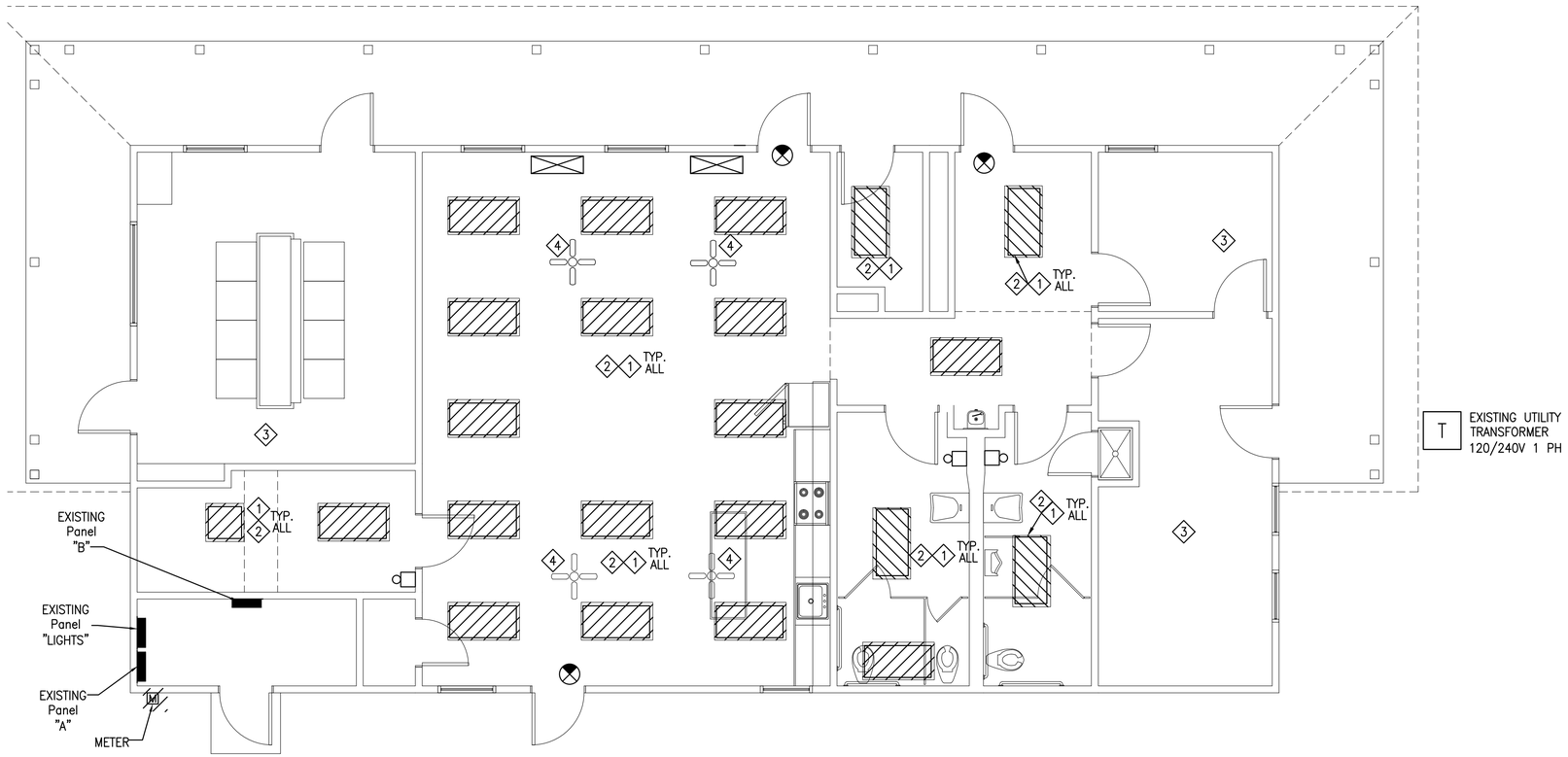

VILLA CONSUELO – ELECTRICAL DEMOLITION FLOOR PLAN

SCALE: 1/4" = 1'-0"

MECHANICAL & ELECTRICAL ENGINEERING, INC.
PROJECT #14031

SANTA FE:
1222 Luisa St. Suite B
Santa Fe, New Mexico 87505
505/983-2389

ALBUQUERQUE:
8417 Washington Pl., NE
Albuquerque, NM 87113
505/856-1699

P: FP: M: E:

KARL M. TIPTON
NEW MEXICO
21200
PROFESSIONAL ENGINEER
9-30-14

autotroph
architecture.planning.sustainable design consulting

LUISA
SENIOR CENTER
1500 LUISA STREET
SANTA FE, NM 87504

VILLA CONSUELO
SENIOR CENTER
1200 CAMINO CONSUELO STREET
SANTA FE, NM 87504

PASATIEMPO
SENIOR CENTER
664 ALTA VISTA STREET
SANTA FE, NM 87504

VILLA CONSUELO SENIOR CENTER

ELECTRICAL DEMOLITION FLOOR PLAN

Project number	1210
Date	1 OCTOBER 2014
Drawn by	
Checked by	KMT,BGS

V-E1.0

LIGHT FIXTURE SCHEDULE

KEY	DESCRIPTION	MANUFACTURER	CATALOG #	#LAMPS/TYPE	VOLT.	WATTS/ FIXTURE	MOUNTING	COMMENTS
A	2x4 LED TROFFER	COOPER LIGHTING/ METALUX	24SR-LD1-48-S-UNV-L835-CD1-U	LED	UNV	49	RECESSED	
B	2x4 LED TROFFER	COOPER LIGHTING/ METALUX	24SR-LD1-39-C-UNV-L830-CD1-U	LED	UNIV	39	RECESSED	
AE	2x4 LED TROFFER WITH EM BACK UP	COOPER LIGHTING/ METALUX	24SR-LD1-48-S-UNV-EL14 -L835-CD1-U	LED	UNV	49	RECESSED	
BE	2x4 LED TROFFER WITH EM BACK UP	COOPER LIGHTING/ METALUX	24SR-LD1-39-C-UNV-EL14 -L830-CD1-U	LED	UNIV	39	RECESSED	

GENERAL NOTES:

A. ALL LIGHTING FIXTURES ARE DIRECT REPLACEMENT ONLY. NO CHANGES TO SWITCHING OR CONTROLS REQUIRED. INSTALL FIXTURES WTIH NEW CEILING GRID. COORDINATE INSTALLATION WITH ARCHITECTURAL SHEETS.

KEYED NOTES:◇

1. REINSTALL EXISTING FANS, RECONNECT TO EXISTING SWITCHES AND FEEDERS.
2. INSTALL NEW LIGHT FIXTURE IN SAME LOCATION AS EXISTING FOR ONE TO ONE SWAP. CONNECT NEW FIXTURE TO EXISTING FEEDERS AND SWITCHING. PRIOR TO INSTALL FIELD VERIFY FIXTURE LOCATIONS.
3. INSTALL NEW SWITCHED RECEPTACLE FOR RANGE HOOD. CONNECT RECEPTACLE TO NEAR OPEN CIRCUIT. INSTALL SWITCH ABOVE COUNTER COORDINATE HEIGHT WITH EXISTING CASE WORK.
4. INSTALL NEW LIGHT FIXTURE IN NEW CEILING GRID LAYOUT. EXTEND FEEDERS FROM NEAREST EXISTING FIXTURE. PROVIDE ALL CONDUIT WIRING AND PULLBOXES NECESSARY FOR FULL OPERATIONS. FIELD VERIFY EXISTING FIXTURE LOCATION PRIOR TO INSTALL.
5. EXISTING EXIT SIGN TO REMAIN.
6. NO WORK IN THIS AREA.
7. INSTALL NEW FIRE ALARM CONTROL PANEL AND CONTROL DEVICES THROUGH OUT RENOVATED AREA. REFER TO DETAIL THIS SHEET FOR ADDITIONAL INFORMATION.

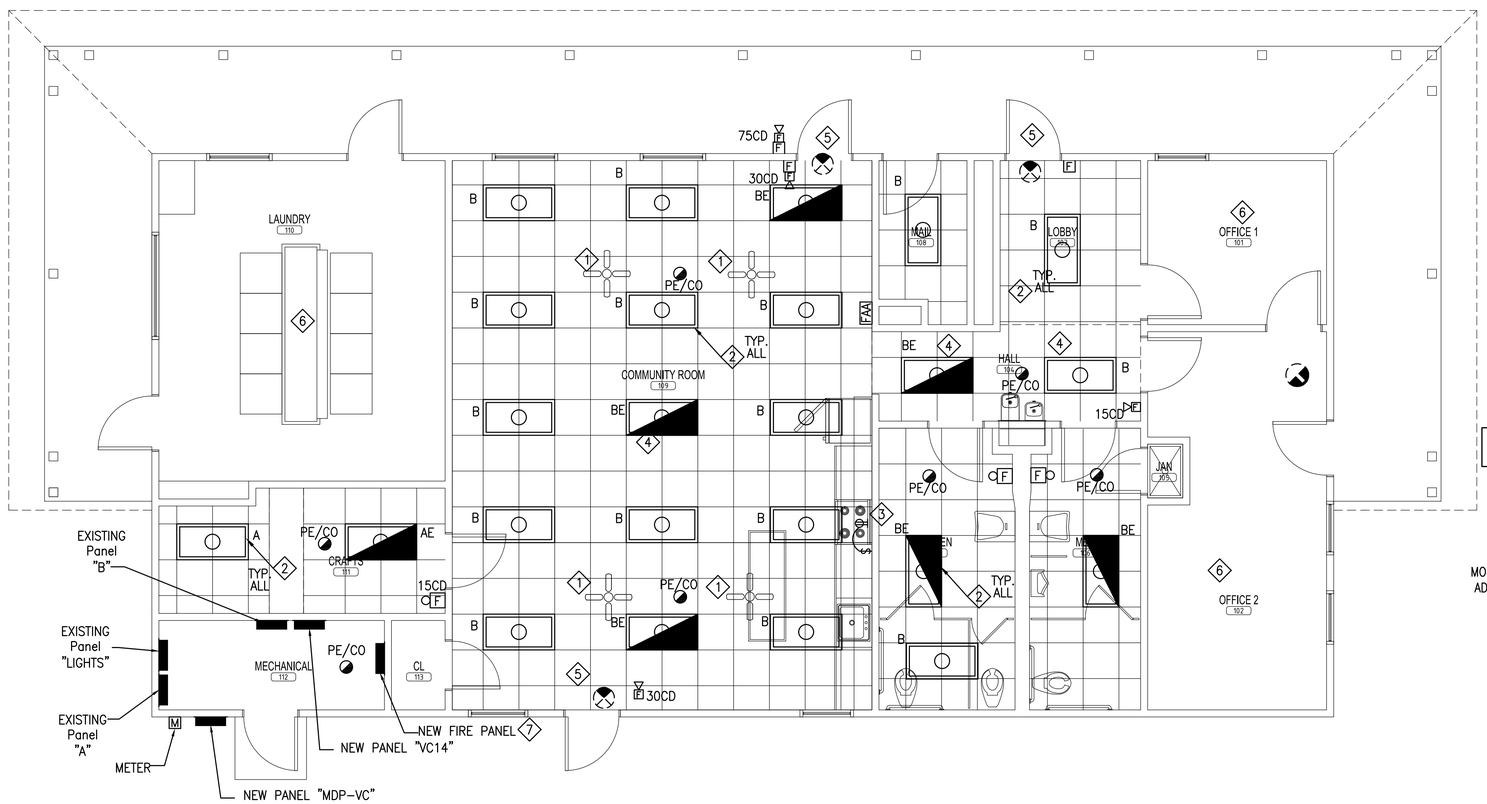

VILLA CONSUELO SENIOR CENTER – ELECTRICAL FLOOR PLAN – LIGHTING

SCALE: 1/4" = 1'-0"

T EXISTING UTILITY TRANSFORMER 120/240V 1 PH

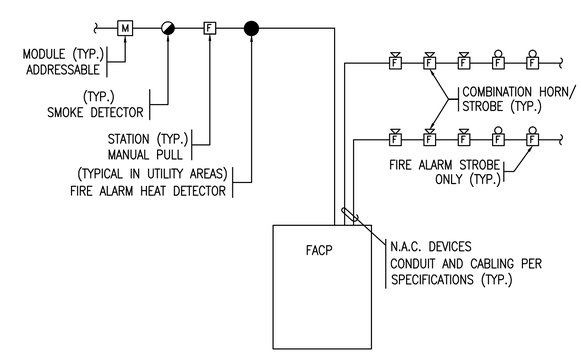

ADDRESSABLE FIRE ALARM– RISER DIAGRAM DETAIL

NOT TO SCALE

NOTE: FIELD VAIRFY LOCATIONS AND QUANTITIES OF FIRE ALARM DEVICES AND ZONING. PROVIDE CONNECTIONS AS REQUIRED.

MECHANICAL & ELECTRICAL ENGINEERING, INC.
PROJECT #14031
SANTA FE: 1222 Luisa St. Suite B, Santa Fe, New Mexico 87505, 505/983-2389
ALBUQUERQUE: 8417 Washington Pl., NE, Albuquerque, NM 87113, 505/856-1699
P: FP: M: E:

9-30-14 KARL M. TIPTON NEW MEXICO 21200 PROFESSIONAL ENGINEER

autotroph
architecture.planning.sustainable design consulting

LUISA
SENIOR CENTER
1500 LUISA STREET
SANTA FE, NM 87504

VILLA CONSUELO
SENIOR CENTER
1200 CAMINO CONSUELO STREET
SANTA FE, NM 87504

PASATIEMPO
SENIOR CENTER
664 ALTA VISTA STREET
SANTA FE, NM 87504

VILLA CONSUELO SENIOR CENTER

ELECTRICAL FLOOR PLAN LIGHTING

Project number	1210
Date	1 OCTOBER 2014
Drawn by	
Checked by	KMT,BGS

V-E1.1

KEYED NOTES: ◇

6. INSTALL CONDUIT AND FEEDERS FROM METER TO MDP. SEE NEW RISER SHEET V–E6.0.
7. INSTALL 120V MECHANICAL UNIT PROVIDE NECESSARY MEANS OF DISCONNECT AND ALL ASSOCIATED WIRING AND CONDUIT.
8. INSTALL NEW DRINKING FOUNTAIN, RECONNECT TO EXISTING DRINKING FOUNTAIN POWER. FIELD VERIFY CIRCUIT CAPACITY PRIOR TO INSTALL.

1. INSTALL NEW ADA DOOR OPERATOR INTO BUILDING. PROVIDE ALL CONDUIT AND FEEDERS. COORDINATE INSTALL WITH MANUFACTURES RECOMMENDATION.
2. EXISTING UNIT AND CONNECTION TO REMAIN. SHOWN FOR REFERENCE ONLY.
3. INSTALL 40A/2P, 240V, FUSIBLE DISCONNECT SWITCH. FUSES SIZED AT 40A PER MANUFACTURERS RECOMMENDATION. EXTEND CONDUIT FROM DISCONNECT TO PANEL INDICATED. COORDINATE LOCATION TO MOUNT DISCONNECT IN CONVENIENT LOCATION AND COMPLY AS REQUIRED FOR NEC WORKING CLEARANCES AND OWNER REQUIREMENTS.
4. EXTEND 3/4"C WITH CONTROL CONDUCTORS AS REQUIRED TO RESPECTIVE A/C UNIT CONTROLLER. PROVIDE ALL WIRING AND CONNECTIONS FOR A COMPLETE AND OPERATIONAL INSTALLATION. COORDINATE WITH MECHANICAL AND A/C UNIT CONTROL DIAGRAMS.
5. FIELD COORDINATE EXACT LOCATION OF NEW ELECTRICAL PANEL WITH EXISTING MECHANICAL EQUIPMENT.

EQUIPMENT FEEDER SCHEDULE

KEY	DESCRIPTION	PHASE CONDUCTORS	NEUTRAL	EQUIP GROUND	ISOLATED GROUNDING CONDUCTOR	GROUNDING ELECTRODE CONDUCTOR	CONDUIT
A	40A 1Ø	1- #8 CU	1- #8 CU	1-#10 CU			3/4"

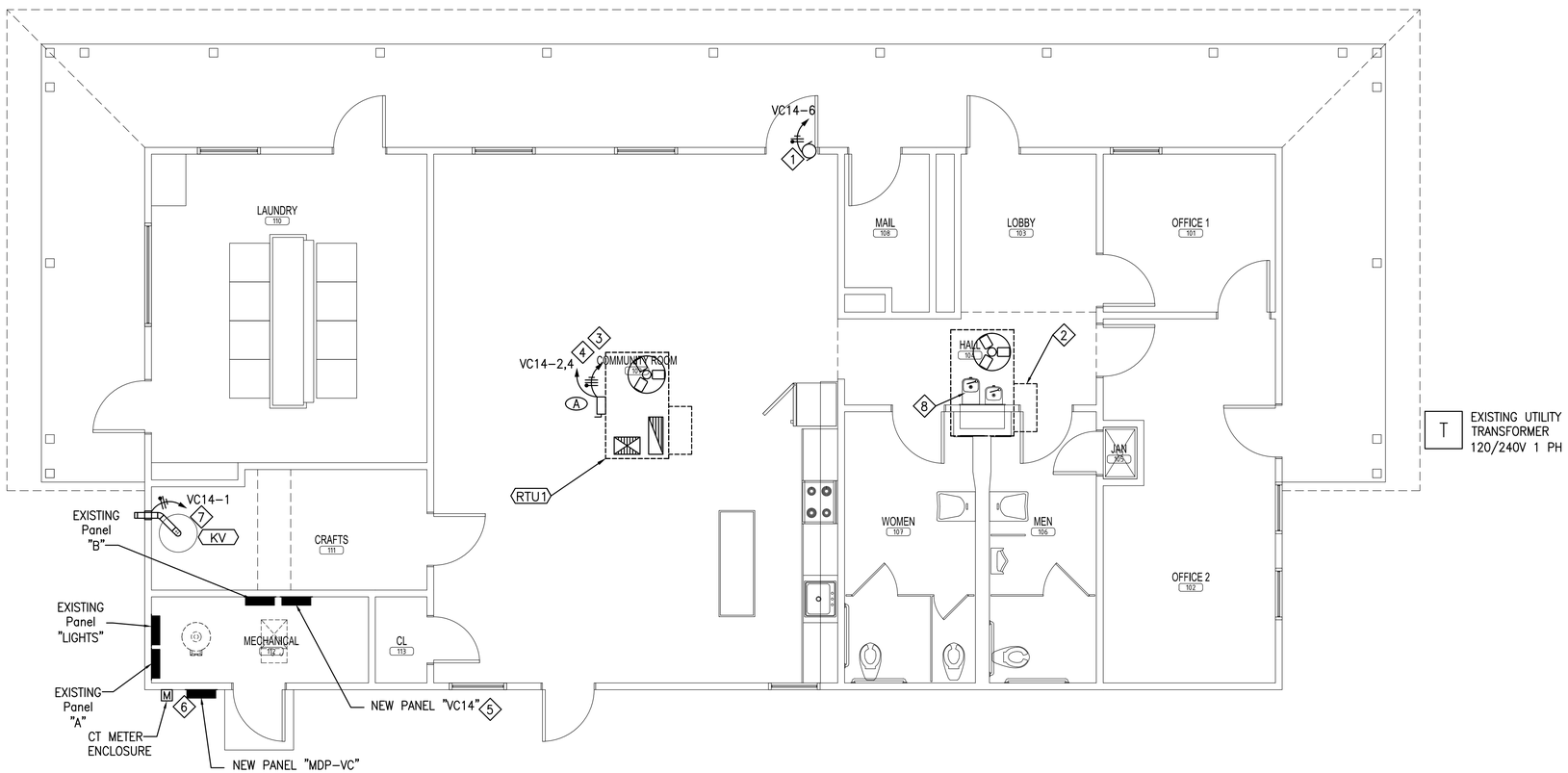

VILLA CONSUELO SENIOR CENTER – ELECTRICAL FLOOR PLAN– POWER

SCALE: 1/4" = 1'–0"

MECHANICAL & ELECTRICAL ENGINEERING, INC.
PROJECT #14031

SANTA FE:
1222 Luisa St. Suite B
Santa Fe, New Mexico 87505
505/983–2389

ALBUQUERQUE:
8417 Washington Pl., NE
Albuquerque, NM 87113
505/856–1699

P: | FP: | M: | E:

9-30-14
KARL M. TIPTON
NEW MEXICO
21200
#14031
PROFESSIONAL ENGINEER

autotroph
architecture.planning.sustainable design consulting

LUISA SENIOR CENTER 1500 LUISA STREET SANTA FE, NM 87504	VILLA CONSUELO SENIOR CENTER 1200 CAMINO CONSUELO STREET SANTA FE, NM 87504
PASATIEMPO SENIOR CENTER 664 ALTA VISTA STREET SANTA FE, NM 87504	

VILLA CONSUELO SENIOR CENTER

ELECTRICAL
FLOOR PLAN
POWER

Project number	1210
Date	1 OCTOBER 2014
Drawn by	
Checked by	KMT,BGS

V-E1.2

KEYED NOTES: ◇

1. REMOVE EXISTING METER, CONDUIT, AND FEEDERS. COORDINATE WORK WITH PNM.
2. INSTALL NEW CT ENCLOSURE/METER PER PNM REQUIREMENTS, DWG MS-3-7.0. COORDINATE WORK WITH PNM.
3. INSTALL NEW CONDUITS AND FEEDERS PER PNM REQUIREMENTS. COORDINATE WORK WITH PNM.
4. INSTALL NEW 400A MAIN DISTRIBUTION PANEL.
5. INSTALL NEW 200A PANEL.
6. EXISTING PANEL TO REMAIN.
7. EXISTING FEEDERS AND CONDUIT TO REMAIN.
8. EXTEND NEW CONDUIT AND FEEDERS FORM NEW MAIN DISTRIBUTION PANEL TO EXISTING PANEL "A".
9. PANEL TO BE UTILIZED AS KITCHEN PANEL IN FUTURE WORK.

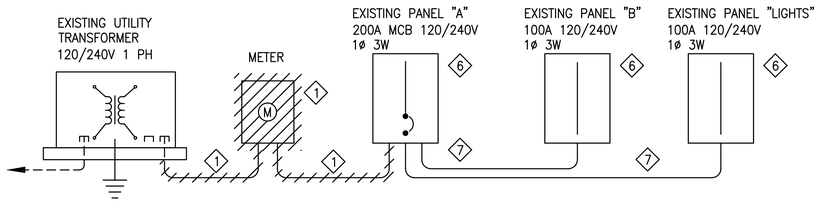

ELECTRICAL DEMOLITION RISER DIAGRAM – VILLA CONSUELO SENIOR CENTER

SCALE: NOT TO SCALE

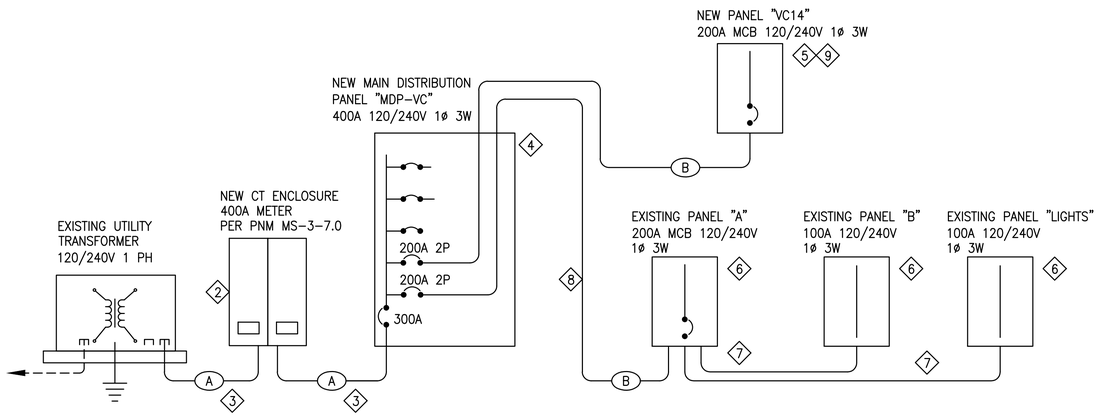

FEEDER SCHEDULE

KEY	DESCRIPTION	PHASE CONDUCTORS	EQUIP GROUND	ISOLATED GROUNDING CONDUCTOR	GROUNDING ELECTRODE CONDUCTOR	CONDUIT
A	400A 1ø	2-#600 MCM CU	1-#2 CU			3"
B	200A 1ø	2-#3/0 CU	1-#4 CU			2"

LEGEND

———	NEW CONDUIT NEW FEEDERS
———	EXISTING CONDUIT EXISTING FEEDERS

ELECTRICAL RISER DIAGRAM – VILLA CONSUELO SENIOR CENTER

SCALE: NOT TO SCALE

MECHANICAL & ELECTRICAL ENGINEERING, INC.
PROJECT #14031

SANTA FE:
1222 Luisa St. Suite B
Santa Fe, New Mexico 87505
505/983-2389

ALBUQUERQUE:
8417 Washington Pl., NE
Albuquerque, NM 87113
505/856-1699

P: FP: M: E:

9-30-14
KARL M. TIPTON
NEW MEXICO
21200
PROFESSIONAL ENGINEER

autotroph
architecture.planning.sustainable design consulting

LUISA SENIOR CENTER 1500 LUISA STREET SANTA FE, NM 87504	VILLA CONSUELO SENIOR CENTER 1200 CAMINO CONSUELO STREET SANTA FE, NM 87504
PASATIEMPO SENIOR CENTER 664 ALTA VISTA STREET SANTA FE, NM 87504	

VILLA CONSUELO SENIOR CENTER
ELECTRICAL RISER

Project number	1210
Date	1 OCTOBER 2014
Drawn by	
Checked by	KMT,BGS

V-E6.0

PANEL MDP-VC

Load Description	Cat #	Brkr Size	poles	CCT #	Phase A Load	Phase B Load	CCT #	poles	Brkr Size	Cat #	Load Description
PANEL VC14	4	200	2	1	3288						
					19200		2	2	200	4	EXISTING PANEL
	4	200	2	3		2866					
						19200	4	2	200	4	
SPACE			1	5	1920						
					0		6	1			SPACE
SPACE			1	7		0					
						0	8	1			SPACE
		Total VA			24408	22066					

Load Category	Connected	Dmd %	Demand
1.) Lighting	0	1.25	0
2.) Recepticals	0	1	0
	0	0.5	0
3.) Motor	0	1.25	0
	0	1	0
4.) Sub - Panels	44554		44554
Total	44554		44554

Feeder Size	SEE RISER
Connected kVA	44.55
Demand kVA	44.55
Connected Amps	186
Demand Amps	186

FED FROM 50KVA TRANSFORMER
PER NEC: ALL MULTIWIRE BRANCH CIRCUITS SHALL
BE PROVIDED WITH MULTIPOLE CIRCUIT BREAKERS

PANEL "MDP-VC", 120/240V 1 PHASE, 3 WIRE
400AMP, MCB, 8 CIRCUIT, SURFACE MOUNT,
NEMA 3R ENCLOSURE, BOTTOM FEED, DOOR-IN-DOOR
SQUARE "D" OR EQUAL
22,000 AIC

SHORT CIRCUIT ANALYSIS - SINGLE PHASE

ASSUME THE BUILDING TRANSFORMER IS 50 KVA WITH UNLIMITED PRIMARY SHORT CIRCUIT AMPS AND 1.7 PERCENT IMPEDANCE. THE MAXIMUM LET THROUGH CURRENT AT THE SECONDARY TERMINALS OF THE TRANSFORMER IS : 19050 AMPS. THE MAXIMUM AVAILABLE FAULT AT THE MAIN FUSIBLE DISCONNECT WILL BE APPROXIMATELY 12495.86 AMPS. THE MAXIMUM AVAILABLE FAULT AT THE CLOSEST PANELBOARD WILL BE LESS THAN 22,000 AMPS USING TYPE JJN FUSES IN THE MAIN SWITCH. ALL NEW PANELBOARDS SHALL BE RATED A MINIMUM OF 22,000 AMPS

PANEL VC14

Load Description	Cat #	Brkr Size	poles	CCT #	Phase A Load	Phase B Load	CCT #	poles	Brkr Size	Cat #	Load Description
KV	3	20	1	1	300						
					2688		2	**2**	**40**	3	**RTU1**
SPARE		20	1	3		0					
						2688	4	**2**	**40**	3	
SPARE		20	1	5	0						
					600		6	1	20	2	J BOX AUTO DOOR
SPARE		20	1	7		0					
						0	8	1	20		SPARE
SPARE		20	1	9	0						
					0		10	1	20		SPARE
SPARE		20	1	11		0					
						0	12	1	20		SPARE
SPARE		20	1	13							
					0		14	1	20		SPARE
SPARE		20	1	15		0					
						0	16	1	20		SPARE
SPARE		20	1	17	0						
					0		18	1	20		SPARE
SPACE			1	19		0					
						0	20	1			SPACE
SPACE			1	21	0						
					0		22	1			SPACE
SPACE			1	23		0					
						0	24	1			SPACE
SPACE			1	25	0						
					0		26	1			SPACE
SPACE			1	27		0					
						0	28	1			SPACE
SPACE			1	29	0						
					0		30	1			SPACE
		Total VA			3588	2688					

Load Category	Connected	Dmd %	Demand
1.) Lighting	0	1.25	0
2.) Recepticals	600	1	600
	0	0.5	0
3.) Motor	5376	1.25	6720
	300	1	300
4.) Sub - Panels	0		0
Total	6276		7620

Feeder Size	SEE RISER
Connected kVA	6.28
Demand kVA	7.62
Connected Amps	26
Demand Amps	32

FED FROM "MDP-VC"
PER NEC: ALL MULTIWIRE BRANCH CIRCUITS SHALL
BE PROVIDED WITH MULTIPOLE CIRCUIT BREAKERS

PANEL "VC14", 120/240V 1 PHASE, 3 WIRE
200AMP, MCB,30 CIRCUIT, SURFACE MOUNT,
NEMA 3R ENCLOSURE, BOTTOM FEED, DOOR-IN-DOOR
SQUARE "D" NQO LOAD CENTER OR EQUAL

MECHANICAL / ELECTRICAL RESPONSIBILITY TABLE												
UNIT #	UNIT		DISCONNECT		STARTER/CONTACTOR		CONTROL WIRE		CONTROL CONDUIT		AUTO SHUT-OFF	
	PROVIDED	INSTALLED	PROVIDED	INSTALLED	PROVIDED	INSTALLED	PROVIDED	INSTALLED	PROVIDED	INSTALLED	PROVIDED	INSTALLED
RTU	MC	MC	MC	EC	MC	MC	CC	CC	EC	EC	N/A	N/A
T	MC	MC	N/A	N/A	N/A	N/A	CC	CC	EC	EC	N/A	N/A

MC Mechanical Contractor
EC Electrical Contractor
CC Controls Contractor

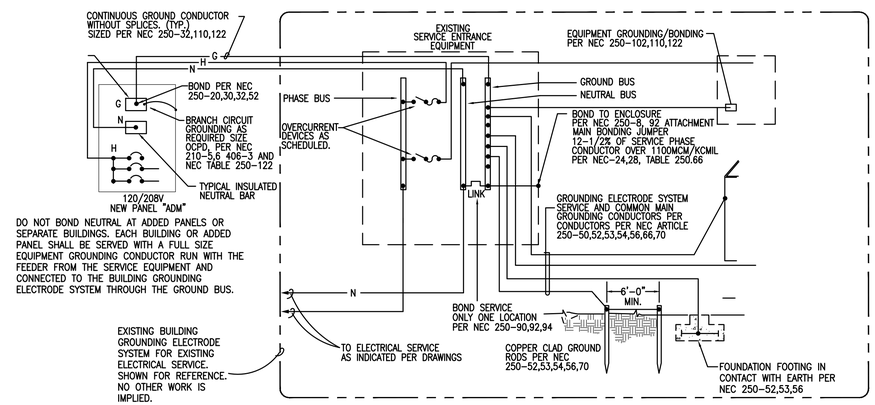

BUILDING GROUNDING DETAIL

N.T.S.

MECHANICAL & ELECTRICAL ENGINEERING, INC.
PROJECT #14031

SANTA FE:
1222 Luisa St. Suite B
Santa Fe, New Mexico 87505
505/983-2389

ALBUQUERQUE:
8417 Washington Pl., NE
Albuquerque, NM 87113
505/856-1699

P: FP: M: E:

9-30-14
KARL M. TIPTON
NEW MEXICO
21200
PROFESSIONAL ENGINEER

autotroph
architecture.planning.sustainable design consulting

LUISA
SENIOR CENTER
1500 LUISA STREET
SANTA FE, NM 87504

VILLA CONSUELO
SENIOR CENTER
1200 CAMINO CONSUELO STREET
SANTA FE, NM 87504

PASATIEMPO
SENIOR CENTER
664 ALTA VISTA STREET
SANTA FE, NM 87504

VILLA CONSUELO SENIOR CENTER
ELECTRICAL RISER

Project number	1210
Date	1 OCTOBER 2014
Drawn by	
Checked by	KMT,BGS

V-E6.1