Item#23-0016
Munis Contract# 3203802

# CITY OF SANTA FE
# GENERAL SERVICES CONTRACT

## PINCH VALVES AND ROTORK ELECTRICAL VALVE ACTUATORS

THIS AGREEMENT is made and entered into by and between the City of Santa Fe, hereinafter referred to as the "City", and **Miscowater Intermountain/TW Associates,** hereinafter referred to as the "Contractor."

**IT IS MUTUALLY AGREED BETWEEN THE PARTIES:**

**1. Definitions**

A. "Products and Services Schedule" refers to the complete list of products and services offered under this Agreement and the price for each. Product and service descriptions may be amended with the prior approval of the Agreement Administrator. New products and services shall not be added to the Products and Services Schedule.

B. "Business Hours" means 8:00 a.m. to 5:00 p.m. Mountain Time.

C. "You" and "your" refers to **Miscowater Intermountain/TW Associates** "We," "us" or "our" refers to the City and whose accounts are created under this Agreement.

**2. Scope of Work**

A. The Contractor shall perform the following work:

(1) Provide 5 – 6" Full Bore Enclosed Flanged Flowrox Pinch valves, CI body, Nitrile Rubber sleeve, rated for 150 psi with Rotork IQ 12 open and close actuators.

(2) Provide 2 – 6" Manual Full Bore Enclosed Flanged Flowrox Pinch valves, CI body, Nitrile Rubber sleeve, rated for 150 psi with manual actuator.

(3) Piping connections including new filler flange fittings and, gaskets to connect new pinch valved to existing piping

(4) Submittals, Shop Drawings, and O&M Manual

(5) Freight to site.

(6) All labor and materials needed for Installation of Supplied pinch valves and actuators including:

a. Site measurements to ensure proper installation
b. Removal of existing valves.
c. Installation of new pinch valves and Rotork actuators
d. On-site start-up by MISCO Water
e. Excess material to be placed in owner's onsite dumpster

f. Exclusions:
   i. Electrical work not included.
   ii. CID permits by others.
   iii. Coatings are not included.
   iv. Work to be performed during normal working hours.

3. **Compensation**

The total compensation under this Agreement shall not exceed $142,512.00 - plus New Mexico gross receipts tax.

4. **Payment Provisions**

All payments under this Agreement are subject to the following provisions.

A. Acceptance - In accordance with Section 13-1-158 NMSA 1978, the City shall determine if the product or services provided meet specifications. Until the products or services have been accepted in writing by the City, the City shall not pay for any products or services. Unless otherwise agreed upon between the City and the Contractor, within thirty (30) days from the date the City receives written notice from the Contractor that payment is requested for services or within thirty (30) days from the receipt of products, the City shall issue a written certification (by letter or email) of complete or partial acceptance or rejection of the products or services. Unless the City gives notice of rejection within the specified time period, the products or services will be deemed to have been accepted.

B. Payment of Invoice - Upon acceptance that the products or services have been received and accepted, payment shall be tendered to the Contractor within thirty (30) days after the date of invoice. After the thirtieth day from the date that written certification of acceptance is issued, late payment charges shall be paid on the unpaid balance due on the contract to the Contractor at the rate of 1.5 % per month. Contractor may submit invoices for payment no more frequently than monthly. Payment will be made to the Contractor's designated mailing address. Payment on each invoice shall be due within 30 days from the date of the acceptance of the invoice. The City agrees to pay in full the balance shown on each account's statement, by the due date shown on said statement.

5. **Term**

THIS AGREEMENT SHALL NOT BECOME EFFECTIVE UNTIL APPROVED BY THE CITY. This Agreement shall terminate on **June 30, 2023**, unless terminated pursuant to paragraph 4 (Termination), or paragraph 5 (Appropriations). In accordance with Section 13-1-150 NMSA 1978, no contract term for a professional services contract, including extensions and renewals, shall exceed four years, except as set forth in Section 13-1-150 NMSA 1978

6. **Default and Force Majeure**

The City reserves the right to cancel all or any part of any orders placed under this contract without cost to the City, if the Contractor fails to meet the provisions of this contract and, except as otherwise provided herein, to hold the Contractor liable for any excess cost occasioned by the City due to the Contractor's default. The Contractor shall not be liable for any excess costs if failure to perform the order arises out of causes beyond the control and without the fault or negligence of the Contractor; such causes include, but are not restricted to, acts of God or the public enemy, acts of the State or Federal Government, fires, floods, epidemics, quarantine restrictions, strikes, freight embargoes, unusually severe weather and defaults of sub-contractors due to any of the above, unless the City shall determine that the supplies or services to be furnished by the sub-contractor were obtainable from other sources in sufficient time to permit the Contractor to meet the required delivery scheduled. The rights and remedies of the City provided in this paragraph shall not be exclusive and are in addition to any other rights now being provided by law or under this contract.

7. **Termination**

A. Grounds. The City may terminate this Agreement for convenience or cause. The Contractor may only terminate this Agreement based upon the City's uncured, material breach of this Agreement.

B. Notice; City Opportunity to Cure.

1) Except as otherwise provided in Paragraphs 7.A and 17, the City shall give Contractor written notice of termination at least thirty (30) days prior to the intended date of termination.

2) Contractor shall give City written notice of termination at least thirty (30) days prior to the intended date of termination, which notice shall (i) identify all the City's material breaches of this Agreement upon which the termination is based and (ii) state what the City must do to cure such material breaches. Contractor's notice of termination shall only be effective (i) if the City does not cure all material breaches within the thirty (30) day notice period or (ii) in the case of material breaches that cannot be cured within thirty (30) days, the City does not, within the thirty (30) day notice period, notify the Contractor of its intent to cure and begin with due diligence to cure the material breach.

3) Notwithstanding the foregoing, this Agreement may be terminated immediately upon written notice to the Contractor (i) if the Contractor becomes unable to perform the services contracted for, as determined by the City; (ii) if, during the term of this Agreement, the Contractor is suspended or debarred by the City; or (iii) the Agreement is terminated pursuant to Paragraph 17, "Appropriations", of this Agreement.

C. Liability. Except as otherwise expressly allowed or provided under this Agreement, the City's sole liability upon termination shall be to pay for acceptable work performed prior to the Contractor's receipt or issuance of a notice of termination; provided, however, that a notice of termination shall not nullify or otherwise affect either party's liability for pre-termination defaults under or breaches of this Agreement. The Contractor shall submit an invoice for such work within thirty (30) days of receiving or sending the notice of termination. *THIS PROVISION IS NOT EXCLUSIVE AND DOES NOT WAIVE THE CITY'S OTHER LEGAL*

*RIGHTS AND REMEDIES CAUSED BY THE CONTRACTOR'S DEFAULT/BREACH OF THIS AGREEMENT.*

8. **Amendment**

A. This Agreement shall not be altered, changed or amended except by instrument in writing executed by the parties hereto and all other required signatories.

B. If the City proposes an amendment to the Agreement to unilaterally reduce funding due to budget or other considerations, the Contractor shall, within thirty (30) days of receipt of the proposed Amendment, have the option to terminate the Agreement, pursuant to the termination provisions as set forth in Paragraph 7 herein, or to agree to the reduced funding.

9. **Status of Contractor**

The Contractor, and Contractor's agents and employees, are independent Contractors for the City and are not employees of the City. The Contractor, and Contractor's agents and employees, shall not accrue leave, retirement, insurance, bonding, use of City vehicles, or any other benefits afforded to employees of the City as a result of this Agreement. The Contractor acknowledges that all sums received hereunder are personally reportable by the Contractor for income tax purposes, including without limitation, self-employment tax and business income tax. The Contractor agrees not to purport to bind the City unless the Contractor has written authority to do so, and then only within the strict limits of that authority.

10. **Assignment**

The Contractor shall not assign or transfer any interest in this Agreement or assign any claims for money due or to become due under this Agreement without the prior written approval of the City.

11. **Subcontracting**

The Contractor shall not subcontract any portion of the services to be performed under this Agreement without the prior written approval of the City. No such subcontract shall relieve the primary Contractor from its obligations and liabilities under this Agreement, nor shall any subcontract obligate direct payment from the City.

12. **Non-Collusion**

In signing this Agreement, the Contractor/Contractor certifies the Contractor/Contractor has not, either directly or indirectly, entered into action in restraint of free competitive bidding in connection with this offer submitted to the City.

13. **Inspection of Plant**

The City may inspect, at any reasonable time during Contractor's regular business hours and upon prior written notice, the Contractor's plant or place of business, or any subcontractor's plant or place of business, which is related to the performance of this contract.

14. **Commercial Warranty**

The Contractor agrees that the tangible personal property or services furnished under this

Agreement shall be covered by the most favorable commercial warranties the Contractor gives to any customer for such tangible personal property or services, and that the rights and remedies provided herein shall extend to the City and are in addition to and do not limit any rights afforded to the City by any other clause of this order. Contractor agrees not to disclaim warranties of fitness for a particular purpose or merchantability.

15. **Condition of Proposed Items**

Where tangible personal property is a part of this Agreement, all proposed items are to be NEW and of most current production, unless otherwise specified.

16. **Records and Audit**

During the term of this Agreement and for three years thereafter, the Contractor shall maintain detailed records pertaining to the services rendered and products delivered. These records shall be subject to inspection by the City, the State Auditor and other appropriate state and federal authorities. The City shall have the right to audit billings both before and after payment. Payment under this Agreement shall not foreclose the right of the City to recover excessive or illegal payments.

17. **Appropriations**

The terms of this Agreement, and any orders placed under it, are contingent upon sufficient appropriations and authorization being made by the City Council for the performance of this Agreement. If sufficient appropriations and authorization are not made by the legislature, this Agreement, and any orders placed under it, shall terminate upon written notice being given by the City to the Contractor. The City's decision as to whether sufficient appropriations are available shall be accepted by the Contractor and shall be final. If the City proposes an amendment to the Agreement to unilaterally reduce funding, the Contractor shall have the option to terminate the Agreement or to agree to the reduced funding, within thirty (30) days of receipt of the proposed amendment.

18. **Release**

The Contractor, upon final payment of the amount due under this Agreement, releases the City, its officers and employees, from all liabilities, claims and obligations whatsoever arising from or under this Agreement. The Contractor agrees not to purport to bind the City, unless the Contractor has express written authority to do so, and then only within the strict limits of that authority.

19. **Confidentiality**

Any confidential information provided to or developed by the Contractor in the performance of this Agreement shall be kept confidential and shall not be made available to any individual or organization by the Contractor without prior written approval by the City.

20. **Conflict of Interest**

A. The Contractor represents and warrants that it presently has no interest and, during the term of this Agreement, shall not acquire any interest, direct or indirect, which would conflict in any manner or degree with the performance or services required under the Agreement. The Contractor shall comply with any applicable provisions of the New Mexico

Governmental Conduct Act and the New Mexico Financial Disclosures Act.

B. The Contractor further represents and warrants that it has complied with, and, during the term of this Agreement, will continue to comply with, and that this Agreement complies with all applicable provisions of the Governmental Conduct Act, Chapter 10, Article 16 NMSA 1978.

C. Contractor's representations and warranties in Paragraphs A and B of this Paragraph are material representations of fact upon which the City relied when this Agreement was entered into by the parties. Contractor shall provide immediate written notice to the City if, at any time during the term of this Agreement, Contractor learns that Contractor's representations and warranties in Paragraphs A and B of this Paragraph 20 were erroneous on the effective date of this Agreement or have become erroneous by reason of new or changed circumstances. If it is later determined that Contractor's representations and warranties in Paragraphs A and B of this Paragraph 20 were erroneous on the effective date of this Agreement or have become erroneous by reason of new or changed circumstances, in addition to other remedies available to the City and notwithstanding anything in the Agreement to the contrary, the City may immediately terminate the Agreement.

D. All terms defined in the Governmental Conduct Act have the same meaning in this section.

21. **Approval of Contractor Representative(s)**

The City reserves the right to require a change in Contractor representative(s) if the assigned representative(s) are not, in the opinion of the City, adequately serving the needs of the City.

22. **Scope of Agreement; Merger**

This Agreement incorporates all the agreements, covenants, and understandings between the parties hereto concerning the subject matter hereof, and all such covenants, agreements and understandings have been merged into this written Agreement. No prior agreements or understandings, verbal or otherwise, of the parties or their agents shall be valid or enforceable unless embodied in this Agreement.

23. **Notice**

The Procurement Code, Sections 13-1-28 through 13-1-199 NMSA 1978, imposes civil and criminal penalties for its violation. In addition, the New Mexico criminal statutes impose felony penalties for bribes, gratuities, and kickbacks.

24. **Equal Opportunity Compliance**

The Contractor agrees to abide by all federal and state laws, and local Ordinances, pertaining to equal employment opportunity. In accordance with all such laws, rules, and regulations, the Contractor agrees to assure that no person in the United States shall on the grounds of race, religion, color, national origin, ancestry, sex, age, physical or mental handicap, or serious medical condition, spousal affiliation, sexual orientation or gender identity, be excluded from employment with or participation in, be denied the benefits of, or be otherwise

subjected to discrimination under any program or activity performed under this Agreement. If Contractor is found not to be in compliance with these requirements during the life of this Agreement, Contractor agrees to take appropriate steps to correct these deficiencies.

25. **Indemnification**

The Contractor shall hold the City and its employees harmless and shall indemnify the City and its employees against any and all claims, suits, actions, liabilities and costs of any kind, including attorney's fees for personal injury or damage to property arising from the acts or omissions of the Contractor, its agents, officers, employees or subcontractors. The Contractor shall not be liable for any injury or damage as a result of any negligent act or omission committed by the City, its officers or employees.

26. **New Mexico Tort Claims Act**

Any liability incurred by the City of Santa Fe in connection with this Agreement is subject to the immunities and limitations of the New Mexico Tort Claims Act, Section 41-4-1, et. seq. NMSA 1978, as amended. The City and its "public employees" as defined in the New Mexico Tort Claims Act, do not waive sovereign immunity, do not waive any defense and do not waive any limitation of liability pursuant to law. No provision in this Agreement modifies or waives any provision of the New Mexico Tort Claims Act.

27. **Applicable Law**

The laws of the State of New Mexico shall govern this Agreement, without giving effect to its choice of law provisions. Venue shall be proper only in a New Mexico court of competent jurisdiction in accordance with NMSA 1978, § 38-3-2.By execution of this Agreement, Contractor acknowledges and agrees to the jurisdiction of the courts of the State of New Mexico over any and all lawsuits arising under or out of any term of this Agreement.

28. **Limitation of Liability**

The Contractor's liability to the City, for any cause whatsoever shall be limited to the purchase price paid to the Contractor for the products and services that are the subject of the City's, claim. The foregoing limitation does not apply to paragraph 25 of this Agreement or to damages resulting from personal injury caused by the Contractor's negligence.

29. **Incorporation by Reference and Precedence**

If this Agreement has been procured pursuant to a request for proposals, this Agreement is derived from (1) the request for proposal, (including any written clarifications to the request for proposals and any City response to questions); (2) the Contractor's best and final offer; and (3) the Contractor's response to the request for proposals.

In the event of a dispute under this Agreement, applicable documents will be referred to for the purpose of clarification or for additional detail in the following order of precedence: (1) amendments to the Agreement in reverse chronological order; (2) the Agreement, including the scope of work and all terms and conditions thereof; (3) the request for proposals, including attachments thereto and written responses to questions and written clarifications; (4) the Contractor's best and final offer if such has been made and accepted by the City; and (5) the

Contractor's response to the request for proposals.

30. **Workers' Compensation**

The Contractor agrees to comply with state laws and rules applicable to workers' compensation benefits for its employees. If the Contractor fails to comply with the Workers' Compensation Act and applicable rules when required to do so, this Agreement may be terminated by the City.

31. **Inspection**

If this contract is for the purchase of tangible personal property (goods), final inspection and acceptance shall be made at Destination. Tangible personal property rejected at Destination for non-conformance to specifications shall be removed at Contractor's risk and expense promptly after notice of rejection and shall not be allowable as billable items for payment.

32. **Inspection of Services**

If this contract is for the purchase of services, the following terms shall apply.

A. Services, as used in this Article, include services performed, workmanship, and material furnished or utilized in the performance of services.

B. The Contractor shall provide and maintain an inspection system acceptable to the City covering the services under this Agreement. Complete records of all inspection work performed by the Contractor shall be maintained and made available to the City and for as long thereafter as the Agreement requires. The City has the right to inspect and test all services contemplated under this Agreement to the extent practicable at all times and places during the term of the Agreement. The City shall perform inspections and tests in a manner that will not unduly delay or interfere with Contractor's performance.

C. If the City performs inspections or tests on the premises of the Contractor or a subcontractor, the Contractor shall furnish, and shall require subcontractors to furnish, at no increase in contract price, all reasonable facilities and assistance for the safe and convenient performance of such inspections or tests.

D. If any part of the services do not conform with the requirements of this Agreement, the City may require the Contractor to re-perform the services in conformity with the requirements of this Agreement at no increase in contract amount. When the defects in services cannot be corrected by re-performance, the City may:

(1) require the Contractor to take necessary action(s) to ensure that future performance conforms to the requirements of this Agreement; and

(2) reduce the contract price to reflect the reduced value of the services performed.

E. If the Contractor fails to promptly re-perform the services or to take the necessary action(s) to ensure future performance in conformity with the requirements of this Agreement, the City may:

(1) by contract or otherwise, perform the services and charge to the Contractor any cost incurred by the City that is directly related to the performance of such service; or

(2) terminate the contract for default.

33. **Insurance**

If the services contemplated under this Agreement will be performed on or in City facilities or property, Contractor shall maintain in force during the entire term of this Agreement, the following insurance coverage(s), naming the City as additional insured.

A. **Commercial General Liability** insurance shall be written on an occurrence basis and be a broad as ISO Form CG 00 01 with limits not less than $2,000,000 per occurrence and $2,000,000 in the aggregate for claims against bodily injury, personal and advertising injury, and property damage. Said policy shall include broad form Contractual Liability coverage and be endorsed to name the City of Santa Fe their officials, officers, employees, and agents as additional insureds.

B. **Broader Coverage and Limits**. The insurance requirements under this Agreement shall be the greater of (1) the minimum coverage and limits specified in this Agreement, or (2) the broader coverage and maximum limits of coverage of any insurance policy or proceeds available to the Named Insured. It is agreed that these insurance requirements shall not in any way act to reduce coverage that is broader or that includes higher limits than the minimums required herein. No representation is made that the minimum insurance requirements of this Agreement are sufficient to cover the obligations of Contractor hereunder.

C. Contractor shall maintain the above insurance for the term of this Agreement and name the City as an additional insured and provide for 30 days cancellation notice on any Certificate of Insurance form furnished by Contractor. Such certificate shall also specifically state the coverage provided under the policy is primary over any other valid and collectible insurance and provide a waiver of subrogation.

34. **Impracticality of Performance**

A party shall be excused from performance under this Agreement for any period that the party is prevented from performing as a result of an act of God, strike, war, civil disturbance, epidemic, or court order, provided that the party has prudently and promptly acted to take any and all steps that are within the party's control to ensure performance. Subject to this provision, such non-performance shall not be deemed a default or a ground for termination.

35. **Invalid Term or Condition**

If any term or condition of this Agreement shall be held invalid or unenforceable, the remainder of this Agreement shall not be affected and shall be valid and enforceable.

36. **Enforcement of Agreement**

A party's failure to require strict performance of any provision of this Agreement shall not waive or diminish that party's right thereafter to demand strict compliance with that or any other provision. No waiver by a party of any of its rights under this Agreement shall be effective unless express and in writing, and no effective waiver by a party of any of its rights shall be effective to waive any other rights.

37. **Patent, Copyright and Trade Secret Indemnification**

A. The Contractor shall defend, at its own expense, the City against any claim that any product or service provided under this Agreement infringes any patent, copyright to trademark in the United States or Puerto Rico, and shall pay all costs, damages and attorneys' fees that a court finally awards as a result of any such claim. In addition, if any third party obtains a judgment against the City based upon Contractor's trade secret infringement relating to any product or services provided under this Agreement, the Contractor agrees to reimburse the City for all costs, attorneys' fees and amount of the judgment. To qualify for such defense and or payment, the City shall:

1) give the Contractor prompt written notice within 48 hours of any claim;
2) allow the Contractor to control the defense of settlement of the claim; and
3) cooperate with the Contractor in a reasonable way to facilitate the defense or settlement of the claim.

B. If any product or service becomes, or in the Contractor's opinion is likely to become the subject of a claim of infringement, the Contractor shall at its option and expense:

1) provide the City the right to continue using the product or service and fully indemnify the City against all claims that may arise out of the City's use of the product or service;

2) replace or modify the product or service so that it becomes non-infringing; or,

3) accept the return of the product or service and refund an amount equal to the value of the returned product or service, less the unpaid portion of the purchase price and any other amounts, which are due to the Contractor. The Contractor's obligation will be void as to any product or service modified by the City to the extent such modification is the cause of the claim.

38. **Survival**

The Agreement paragraphs titled "Patent, Copyright, Trademark, and Trade Secret Indemnification; Indemnification; and Limit of Liability" shall survive the expiration of this Agreement. Software licenses, leases, maintenance and any other unexpired Agreements that were entered into under the terms and conditions of this Agreement shall survive this Agreement.

39. **Disclosure Regarding Responsibility**

A. Any prospective Contractor and any of its Principals who enter into a contract greater than sixty thousand dollars ($60,000.00) with any City for professional services, tangible personal property, services or construction agrees to disclose whether the Contractor, or any principal of the Contractor's company is presently debarred, suspended, proposed for debarment, or declared ineligible for award of contract by any federal entity, state agency or local public body.

B. Principal, for the purpose of this disclosure, means an officer, director, owner, partner, or
a person having primary management or supervisory responsibilities within a business entity or related entities.

C. The Contractor shall provide immediate written notice to the City if, at any time

during the term of this Agreement, the Contractor learns that the Contractor's disclosure was at any time erroneous or became erroneous by reason of changed circumstances.

D. A disclosure that any of the items in this requirement exist will not necessarily result in termination of this Agreement. However, the disclosure will be considered in the determination of the Contractor's responsibility and ability to perform under this Agreement. Failure of the Contractor to furnish a disclosure or provide additional information as requested will be grounds for immediate termination of this Agreement pursuant to the conditions set forth in Paragraph 7 of this Agreement.

E. Nothing contained in the foregoing shall be construed to require establishment of a system of records in order to render, in good faith, the disclosure required by this document. The knowledge and information of a Contractor is not required to exceed that which is the normally possessed by a prudent person in the ordinary course of business dealings.

F. The disclosure requirement provided is a material representation of fact upon which reliance was placed when making an award and is a continuing material representation of the facts during the term of this Agreement. If during the performance of the contract, the Contractor is indicted for or otherwise criminally or civilly charged by any government entity (federal, state or local) with commission of any offenses named in this document the Contractor must provide immediate written notice to the City. If it is later determined that the Contractor knowingly rendered an erroneous disclosure, in addition to other remedies available to the Government, the City may terminate the involved contract for cause. Still further the City may suspend or debar the Contractor from eligibility for future solicitations until such time as the matter is resolved to the satisfaction of the City.

40. **Suspension, Delay or Interruption of Work**

The City may, without cause, order the Contractor, in writing, to suspend, delay or interrupt the work in whole or in part for such period of time as the City may determine. The contract sum and contract time shall be adjusted for increases in cost and/or time associated with Contractor's compliance therewith. Upon receipt of such notice, Contractor shall leave the jobsite and any equipment in a safe condition prior to departing. Contractor must assert rights to additional compensation within thirty (30) days after suspension of work is lifted and return to work is authorized. Any compensation requested for which entitlement is granted and the contract sum adjusted, shall have profit included (for work completed) and for cost only (not profit) for Contractor costs incurred directly tied to the suspension itself and not otherwise covered by Contract remedy. Any change in Total Compensation must be reflected in an Amendment executed pursuant to Section 8 of this Agreement.

41. **Notification**

Either party may give written notice to the other party in accordance with the terms of this Paragraph. Any written notice required or permitted to be given hereunder shall be deemed to have been given on the date of delivery if delivered by personal service or hand delivery or three (3) business days after being mailed.

To the City: P. Fred Heerbrandt, P.E.
Wastewater Management Division
73 Paseo Real
Santa Fe, NM 87507

To the Contractor: Nick Lucas
MiscoWater
651 Corporate Circle, #100
Golden CO 80401

Either party may change its representative or address above by written notice to the other in accordance with the terms of this Paragraph. The carrier for mail delivery and notices shall be the agent of the sender.

42. **Succession**

This Agreement shall extend to and be binding upon the successors and assigns of the parties.

IN WITNESS WHEREOF, the Parties have executed this Agreement as of the date of the signature by the required approval authorities below.

CITY OF SANTA FE:

ALAN WEBBER, MAYOR

DATE: Jan 15, 2023

ATTEST:

KRISTINE BUSTOS MIHELCIC,
CITY CLERK
GB MTG 01/11/2023

CITY ATTORNEY'S OFFICE:

Marcos Martinez
Marcos Martinez (Nov 14, 2022 11:01 MST)

SENIOR ASSISTANT CITY ATTORNEY

APPROVED FOR FINANCES:

Emily K. Oster
Emily K. Oster (Jan 15, 2023 09:51 MST)

EMILY OSTER, FINANCE DIRECTOR

Org.Name/Org.#

CONTRACTOR:

NAME RICHARD GINANOT

Sr. PROJECT MANAGER
TITLE

DATE: 11/22/2022

CRS# 02485-20003

October 3rd, 2022

Carlos Casias
Maintenance Supervisor
City of Santa Fe Paseo Real WWTP

Subject: City of Santa Fe Paseo Real WWTP
Headworks Grit Pinch Valves replacement

Dear Mr. Casias:

MISCO Water is pleased to offer the City of Santa Fe a complete furnish and installation quotation for the replacement of QTY of 5 Motor Operated Flanged Pinch valves and QTY of 2 Manual Flanged Pinch valves located in the Paseo Real WWTP Headworks building. The scope of supply includes all labor and materials required to remove and disconnect the existing pinch valves and to install, new flanged pinch valves with Actuators and start-up & commissioning. The scope of supply is outlined in further detail in the table below.

| Item | Description |
|---|---|
| 1 | QTY of 5 – 6" Full Bore Enclosed Flanged Flowrox Pinch valves, CI body, Nitrile Rubber sleeve, rated for 150 psi with Rotork IQ 12 open and close actuators.<br>QTY of 2 – 6" Manual Full Bore Enclosed Flanged Flowrox Pinch valves, CI body, Nitrile Rubber sleeve, rated for 150 psi with manual actuator. |
| 2 | Submittals, Shop Drawings and O&M Manual |
| 3 | Freight to site |
| 4 | All labor and materials needed for Installation is included:<br>- Site measurements to ensure proper installation<br>- Removal of existing 6" pinch valves from the piping.<br>- Installation of new pinch 6" pinch valves<br>- Piping connections including new filler flange fittings and, gaskets to connect new pinch valved to existing piping<br>- On-site actuator start-up and electrical assistance by MISCO Water<br>- Excess material to be placed in owner's onsite dumpster<br>- Exclusions:<br>• Electrical work of disconnecting of the existing actuators and connecting the of the new actuators not included<br>• CID permits by others<br>• Coatings of existing piping and new valves are not included<br>• Work to be performed during normal working hours. |

| | |
|---|---|
| | • Replacement or upgrades of existing electrical gear, equipment, conduits, wire, etc.<br>• SCADA programming<br>• Bypass Pumping<br>• Upgrade of existing concrete pad<br>• Haul-off and disposal of existing valves and actuator<br>• Permits, Fees, engineered drawings<br>• Seismic calculations or Seismic Upgrades<br>• Third party inspection or testing<br>• Hazardous material handling or disposal<br>• Bonds<br>• |

The lead times and construction schedule for the outlined scope of supply are as follows:

- 3-4 weeks from date of agreement with the City of Santa Fe for custom shop drawings (full submittal package to be provided later for informational purposes)
- 12-14 weeks from date of approved shop drawings for shipment of new pinch valves and actuators and needed pipe fittings
- Installation and Start-Up upon delivery of valves and fittings. Exact timing will be coordinated with City staff

The complete price for labor and materials outlined in the scope of supply table above and enclosed valves product data sheet is **$142,512.**
The pricing is valid until December 31st 2022.

Please note the pricing only includes the parts and installation work specifically outlined above. Any additional replacement parts and associated installation work beyond the scope of supply listed above is excluded and MISCO Water reserves the right to reprice should additional replacement parts or site work be needed.

The pricing outlined above does not include New Mexico Gross Receipts tax. The quoted scope of work is based on standard wage rates and insurance policies. MISCO Water reserves the right to reprice our scope of work, should additionally wage, insurance requirements or bonds be deemed necessary by the City.

We trust that you will find this offering complete, but please let us know if you have any additional questions regarding the proposed scope and pricing.

Thank you for your consideration and we look forward to discussing this offering with City staff in more detail in the future.

Nick Lucas
Stefan Oreshkov

MISCO Water TW Associates
720-526-7397
nlucas@miscowater.com
soreshkov@miscowater.com
480-415-7846

# Heavy duty Flowrox™ pinch valves
# Series PV, PVE, PVE/S and PVS

Flowrox™ PV, PVE, PVE/S and PVS heavy duty pinch valves are designed for shut off and control applications involving abrasive or corrosive slurries, powders or granular substances.

In the open position, the valve is full bore with no flow restrictions. During closing, two pinch bars squeeze the valve sleeve shut on the center line. Bubble tight shut-off is provided even if solids have built up on the sleeve wall.

Flowrox control valves are designed for demanding control applications in which conventional valves encounter problems with wear due to increased turbulence. Controllability can be further improved, i.e. linearized and widened, with conical sleeves and smart positioners.

**PV** The open body pinch valve is designed for non-hazardous media, lower pressure, and operating temperatures than the enclosed body. This design isolates vibration and tolerates minor misalignment of the pipeline. It is also light-weight and easy to service.

**PVE** The enclosed body valve is the most common body type for Flowrox pinch valves. Its enclosed design prevents premature sleeve deterioration and protects the sleeve from the environment, making it extremely safe to operate.

**PVE/S** PVE/S includes extra stem and body seals to provide a secondary containment of the fluid in the valve and to prevent leakage to the outside environment from the valve body.

**PVS** The structure of PVS encases all moving parts of the valve. It is optimized for high pressure applications and for aggressive and toxic mediums. The PVS structure has no rising parts.

## Benefits

- Improved process efficiency
- Improved customers' productivity
- Accurate control
- Ease of maintenance
- Extended service intervals

## Features

- 100% tight shut-off
- When compressed, any crystallized particles flake off the sleeve surface.
- Full bore: Ensured free flow of the medium and less pumping energy is required.
- Improved controllability with conical sleeve results in linear control curve.
- Only the sleeve is in contact with the medium and is the only replaceable part. Can be easily changed on site.
- High corrosion resistance and flexible sleeve.


## Sizes

- DN 50 - 800/2" - 32"
- Bigger sizes on request

## Working pressure

Up to 100 bar / 1500 psi

## Pressure classes

- PN 1, PN 4, PN 6, PN 10, PN 16, PN 25, PN 40, PN 64, PN 100

## Materials

- Cast iron / Ductile iron
- Welded steel
- AISI 316
- Aluminium
- Polyurethane / Polyamide

## Flange drillings

- DIN PN 10, DIN PN 16, DIN PN 25, DIN PN 40,
- ASME/ANSI 150, ASME/ANSI 300
- BS TABLE D, AS TABLE D, AS TABLE E
- JIS 10K, JIS 16K
- Others on request

## Exploded view and parts list, type PV

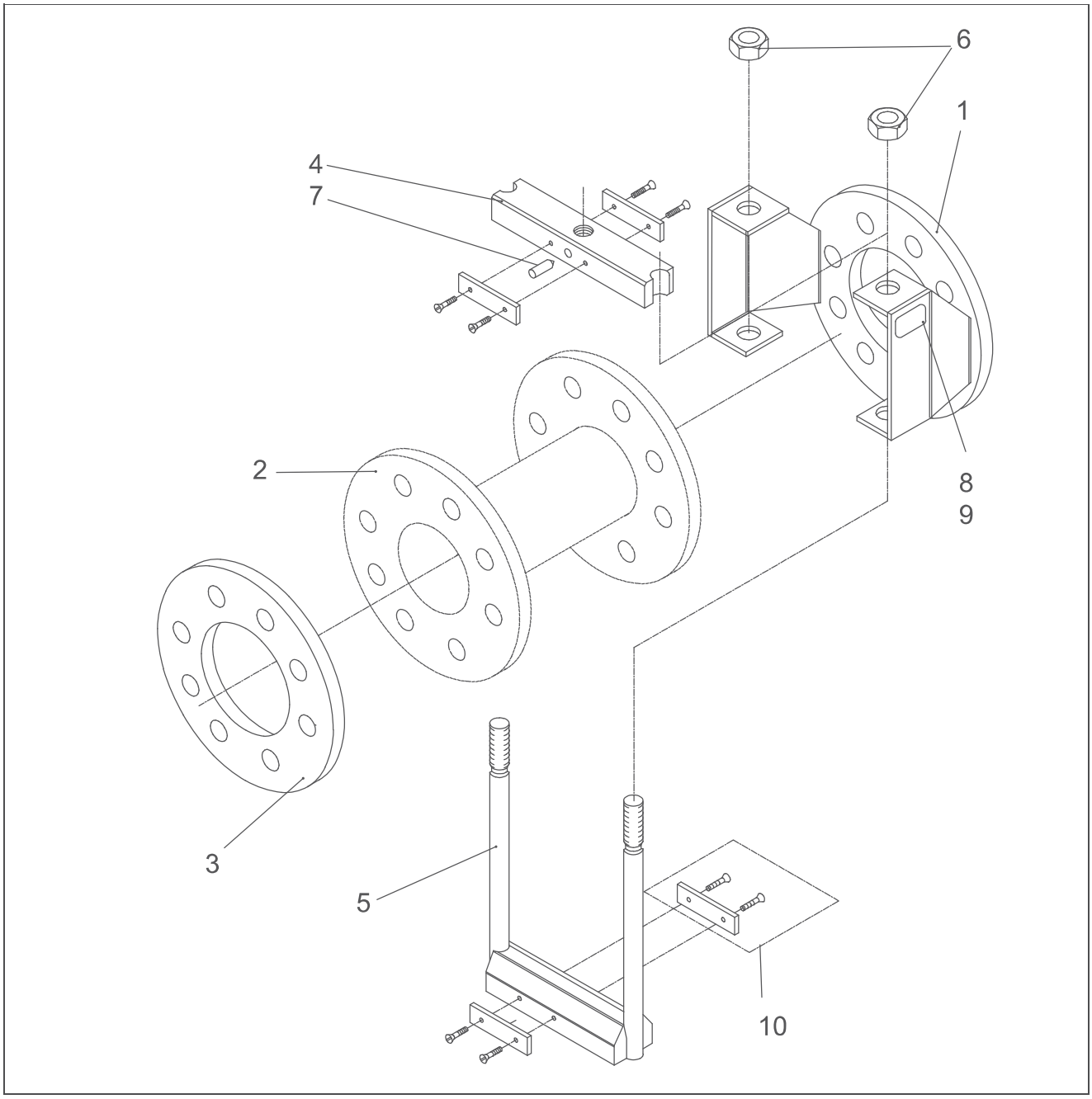


| Part | Description |
|---|---|
| 1 | Valve body |
| 2 | Sleeve |
| 3 | Flange |
| 4 | Upper pinch bar |
| 5 | Lower pinch bar |
| 6 | Hex nut |
| 7 | Set screw |
| 8 | Tag plate |
| 9 | Drive screw |
| 10 | Fixing set |

## Exploded view and parts list, type PVE

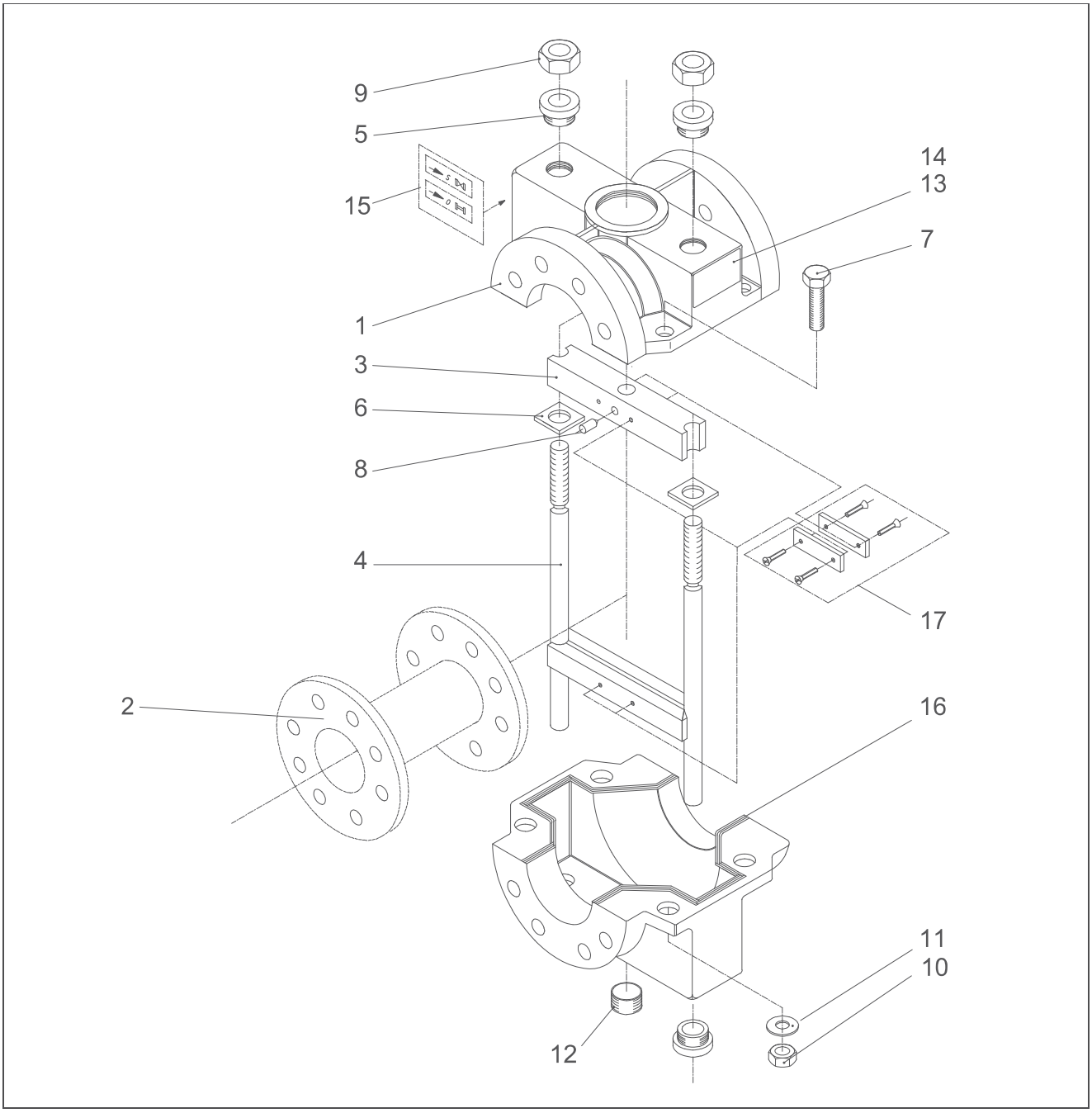


| Part | Description | Part | Description |
|---|---|---|---|
| 1 | Valve body | 10 | Hex nut |
| 2 | Sleeve | 11 | Washer |
| 3 | Upper pinch bar | 12 | Plug |
| 4 | Lower pinch bar | 13 | Tag plate |
| 5 | Bushing | 14 | Drive screw |
| 6 | Guide plate | 15 | Sticker |
| 7 | Hex screw | 16 | Sealing |
| 8 | Set screw | 17 | Fixing set |
| 9 | Hex nut | | |

## Exploded view and parts list, type PVE/S

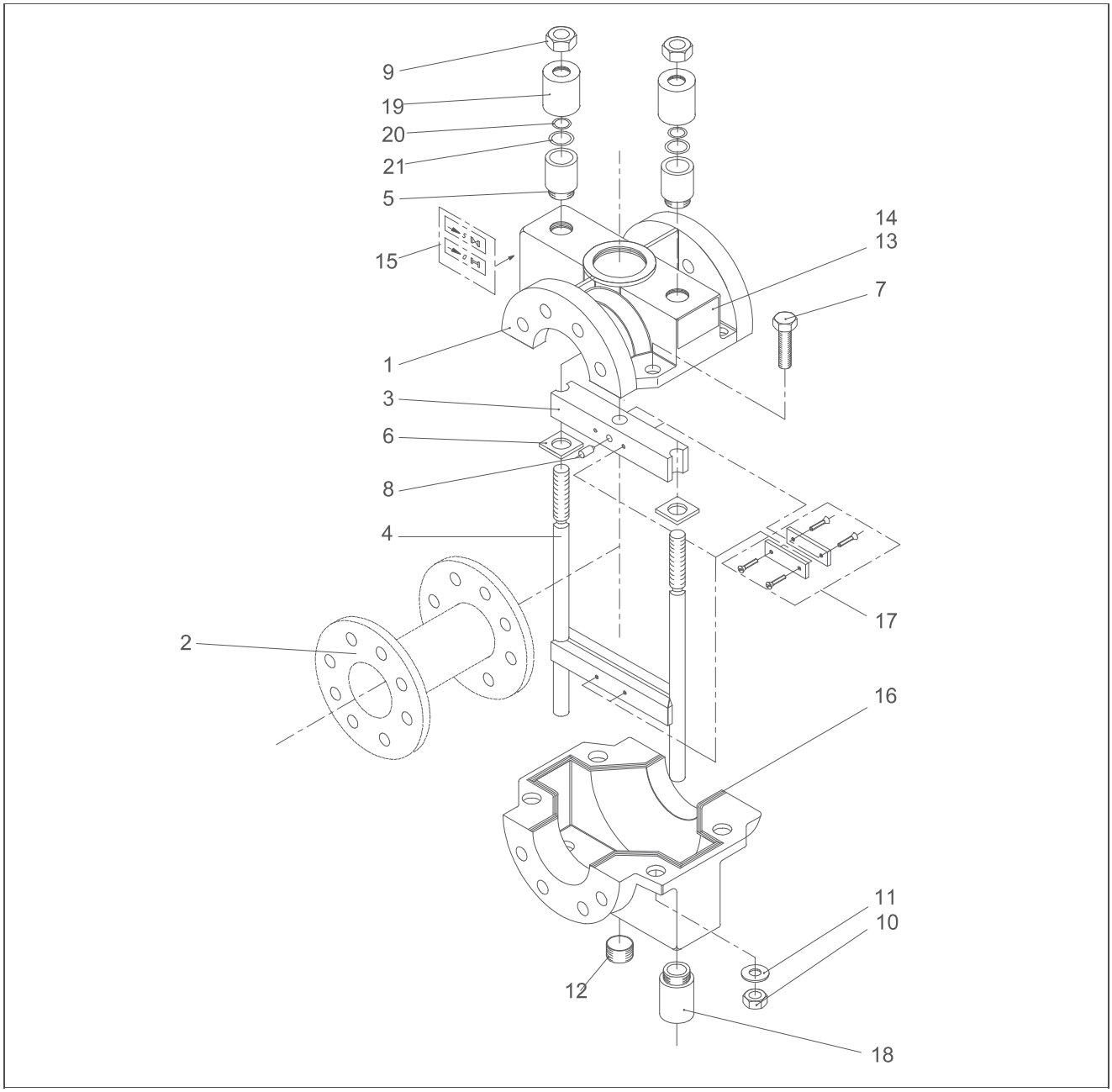


| Part | Description | Part | Description |
|---|---|---|---|
| 1 | Valve body | 12 | Plug |
| 2 | Sleeve | 13 | Tag plate |
| 3 | Upper pinch bar | 14 | Drive screw |
| 4 | Lower pinch bar | 15 | Sticker |
| 5 | Bushing | 16 | Sealing |
| 6 | Guide | 17 | Fixing set |
| 7 | Hex screw | 18 | Bushing |
| 8 | Set screw | 19 | Cover bushing |
| 9 | Hex nut | 20 | Sealing |
| 10 | Hex nut | 21 | Sealing |
| 11 | Washer | | |

## Exploded view and parts list, type PVS

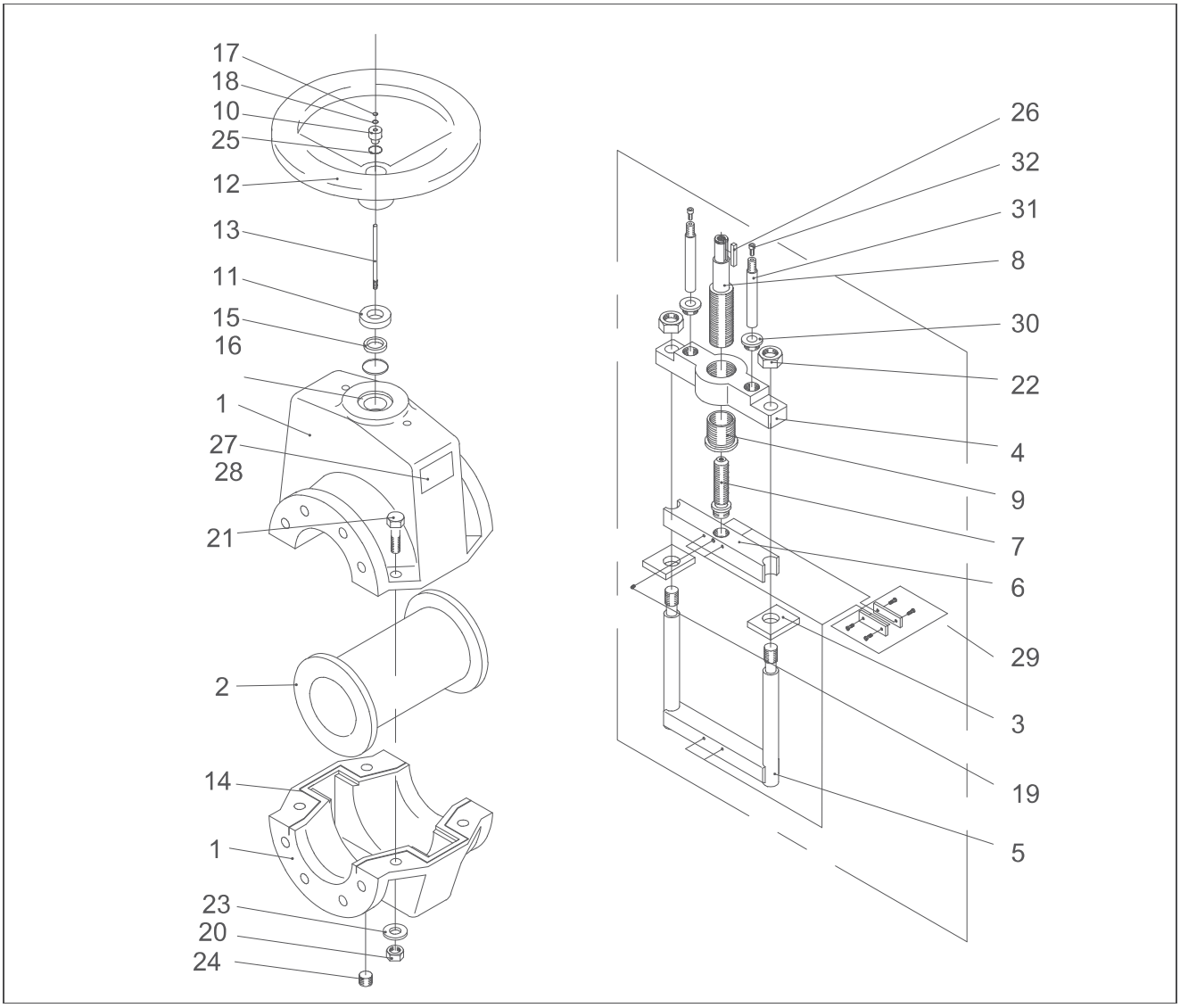


| Part | Description | Part | Description |
|---|---|---|---|
| 1 | Valve body | 17 | Sealing |
| 2 | Sleeve | 19 | Set screw |
| 3 | Quide | 20 | Hex nut |
| 4 | Attachment frame | 21 | Hex screw |
| 5 | Lower pinch bar | 22 | Hex nut |
| 6 | Upper pinch bar | 23 | Washer |
| 7 | Pinch bar stem | 24 | Plug |
| 8 | Handwheel stem | 25 | Locker |
| 9 | Stem nut | 26 | Wedge |
| 10 | Bushing | 27 | Tag plate |
| 11 | Bushing | 28 | Drive screw |
| 12 | Handwheel | 29 | Fixing set |
| 13 | Indicator pin | 30 | Bushing* |
| 14 | Sealing | 31 | Guide bar* |
| 15 | Sealing | 32 | Hex socket head* |
| 16 | Sealing | | |

* Not in all sizes

# Technical specifications

## Type:

Heavy duty PV, PVE and PVS type pinch valves.

## Sizes:

PV: DN 80 - 800 / NPS 3" - 32"
PVE, PV/S, PVS: DN 25 - 800 / NPS 1" - 32"

## Temperature range:

-50°C...+160°C / 32°F...+210°F

## Pressures classes:

PV: 25 bar / 375 psi
PVE, PVE/S, PVS: 0 - 100 bar / 0 - 1500 psi

## Actuators:

- Manual
- Manual with gear
- Pneumatic
- Electric
- Hydraulic

## Construction materials:

Body material:
- Cast iron / Ductile iron
- Welded steel
- AISI 316
- Aluminium
- Polyurethane / Polyamide

Sleeve material:
SBRT = Styrene butadiene
EPDM = Ethylene propylene
NR = Natural rubber
NBR = Nitrile
CSM = Hypalon
EPDMB = Green liqour sleeve
CR = Chloroprene
IIR = Butyl
NRF = Foodstuff natural rubber
NBRF = Foodstuff nitrile
HNBR = Hydrogenated nitrile
FMP = Fluorine rubber
Additional features:*
/M = Flowrox SensoMate sleeve
/PU = PU-coating inside the sleeve
/VAC = Vacuum sleeve
* Some restrictions apply.

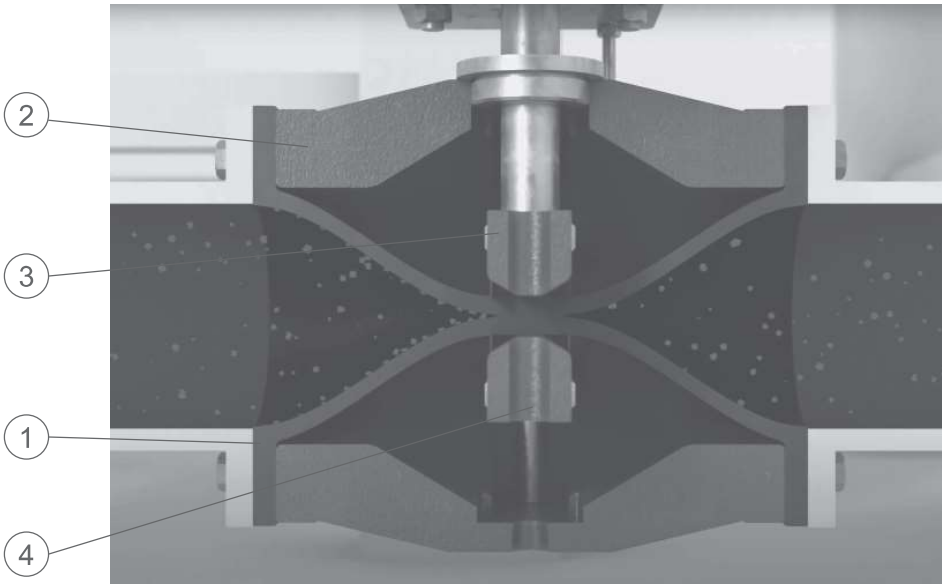


| Part | Description |
|---|---|
| 1 | Sleeve |
| 2 | Body |
| 3 | Upper pinch bar |
| 4 | Lower pinch bar |

The operating principle of Flowrox pinch valves is simple. In the open position, the valve is full bore with no flow restrictions. During closing, two pinch bars squeeze the valve sleeve shut on the centerline. The sleeve is naturally wear-resistant and when particles hit the sleeve's rubber surface, the energy is absorbed and released when the rubber bounces back.

Heavy duty pinch valves provide bubble tight shut-off even if solids have built up on the sleeve wall. When compressed, any crystallized particles flake off the sleeve surface. The full bore structure ensures free flow of the medium.

The construction and materials of the three main components (sleeve, body and actuator) can be tailored to suit your process conditions.

## Dimensions, PV valves

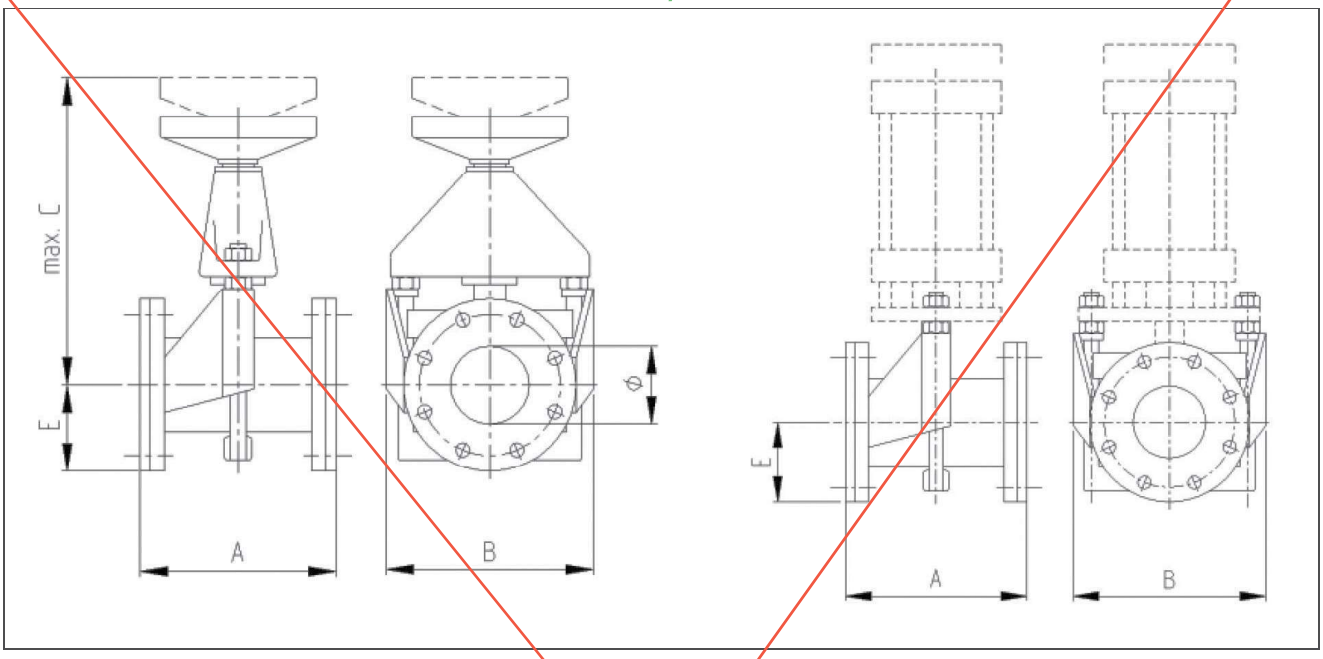


| Valve size (PV) M&A | PN (bar) | A | B | C | E | Weight Manual valves (kg) | Weight Automatic valves (kg) |
|---|---|---|---|---|---|---|---|
| 80 | 1-25 | 200 | 235 | 370 | 100 | 22 | 14 |
| 100 | 1-25 | 250 | 265 | 410 | 110 | 29 | 16 |
| 125 | 1-25 | 310 | 325 | 465 | 135 | 46 | 23 |
| 150 | 1-16 | 375 | 381 | 560 | 143 | 67 | 36 |
| 200 | 1-16 | 500 | 461 | 690 | 170 | 88 | 47 |
| 250 | 1-10 | 625 | 545 | 865 | 210 | 137 | 85 |
| 300 | 1-6 | 750 | 704 | 1020 | 250 | 167 | 100 |

| Valve size (PV) M&A | PN (PSI) | A | B | C | E | Weight Manual valves (lb) | Weight Automatic valves (lb) |
|---|---|---|---|---|---|---|---|
| 3 | 15-365 | 7.9 | 9.3 | 14.6 | 3.9 | 49 | 31 |
| 4 | 15-365 | 9.8 | 10.4 | 16.1 | 4.3 | 64 | 36 |
| 5 | 15-365 | 12.2 | 12.8 | 18.3 | 5.3 | 102 | 51 |
| 6 | 15-240 | 14.8 | 15.0 | 22.0 | 5.6 | 148 | 80 |
| 8 | 15-240 | 19.7 | 18.1 | 27.2 | 6.7 | 194 | 104 |
| 10 | 15-145 | 24.6 | 21.5 | 34.1 | 8.3 | 302 | 188 |
| 12 | 15-75 | 29.5 | 27.7 | 40.2 | 9.8 | 368 | 221 |

## Dimensions, PVE valves

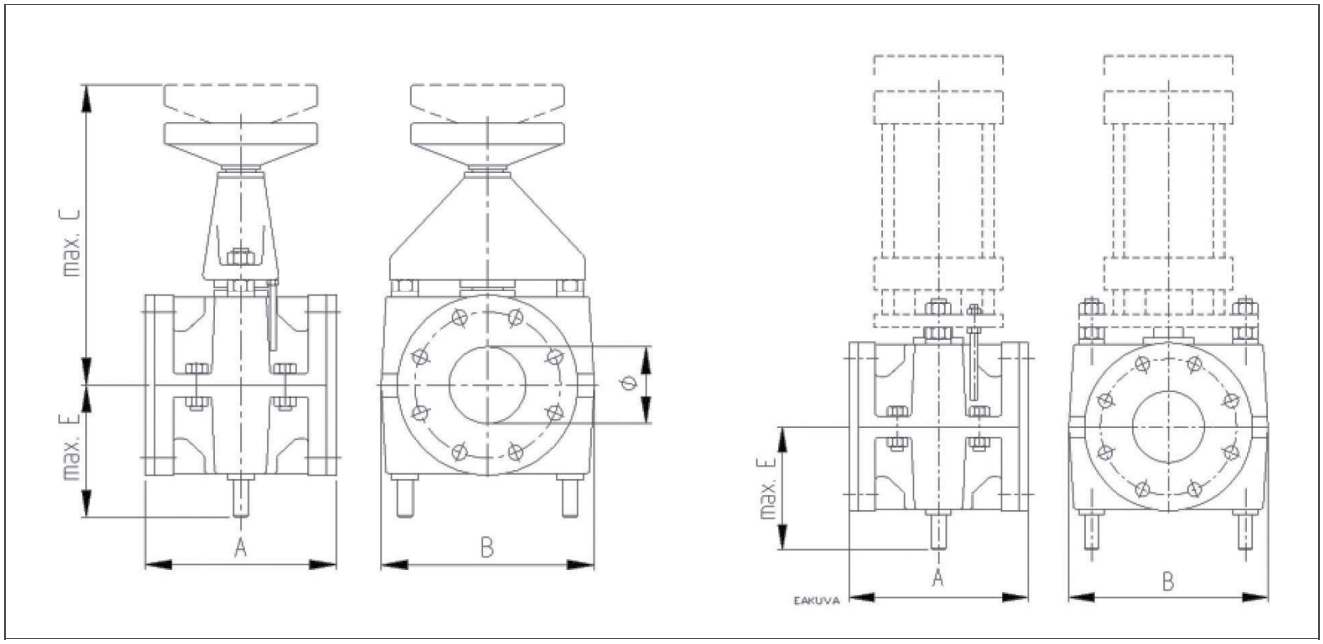


| Valve size (PVE) M&A | PN (bar) | A | B | C | E | Weight Manual valves (kg) | | Weight Automatic valves (kg) | |
|---|---|---|---|---|---|---|---|---|---|
| | | | | | | FE | AL | FE | AL |
| 25 | 1-25 | 165 | 125 | 255 | 87 | 11 | 7 | 8 | 4 |
| 32 | 1-25 | 165 | 140 | 260 | 90 | 14 | 9 | 10 | 5 |
| 40 | 1-25 | 165 | 180 | 265 | 105 | 16 | 9 | 12 | 6 |
| 50 | 1-25 | 165 | 190 | 280 | 120 | 18 | 9 | 13 | 7 |
| 65 | 1-25 | 165 | 210 | 310 | 136 | 22 | 12 | 17 | 9 |
| 80 | 1-25 | 200 | 245 | 370 | 155 | 36 | 17 | 27 | 13 |
| 100 | 1-25 | 250 | 278 | 410 | 175 | 46 | 25 | 33 | 17 |
| 125 | 1-25 | 310 | 340 | 465 | 210 | 74 | 41 | 48 | 25 |
| 150 | 1-16 | 375 | 400 | 560 | 240 | 106 | 74 | 75 | 43 |
| 200 | 1-10 | 500 | 480 | 690 | 295 | 159 | - | 119 | - |
| 250 | 1-6 | 625 | 570 | 865 | 380 | 213 | - | 161 | - |
| 300 | 1 | 750 | 720 | 1020 | 445 | 279 | - | 212 | - |

| Valve size (PVE) M&A | PN (PSI) | A | B | C | E | Weight Manual valves (lbs) | | Weight Automatic valves (lbs) | |
|---|---|---|---|---|---|---|---|---|---|
| | | | | | | FE | AL | FE | AL |
| 1 | 15-365 | 6.5 | 5.0 | 10.1 | 3.4 | 25 | 16 | 18 | 9 |
| 1.25 | 15-365 | 6.5 | 5.5 | 10.2 | 3.5 | 31 | 20 | 22 | 11 |
| 1.5 | 15-365 | 6.5 | 7.1 | 10.4 | 4.1 | 36 | 20 | 27 | 14 |
| 2 | 15-365 | 6.5 | 7.5 | 11 | 4.7 | 40 | 20 | 29 | 16 |
| 2.5 | 15-365 | 6.5 | 8.3 | 12.2 | 5.4 | 49 | 27 | 38 | 20 |
| 3 | 15-365 | 8 | 9.6 | 14.6 | 6.1 | 80 | 38 | 60 | 29 |
| 4 | 15-365 | 10 | 10.9 | 16.1 | 6.9 | 102 | 55 | 73 | 38 |
| 5 | 15-365 | 12.2 | 13.4 | 18.3 | 8.3 | 163 | 91 | 106 | 55 |
| 6 | 15-240 | 14.8 | 15.7 | 22 | 9.4 | 234 | 163 | 166 | 95 |
| 8 | 15-150 | 19.7 | 18.9 | 27.2 | 11.6 | 351 | - | 263 | - |
| 10 | 15-75 | 24.6 | 22.4 | 34.1 | 15 | 470 | - | 355 | - |
| 12 | 15 | 29.5 | 28.3 | 40.2 | 17.5 | 615 | - | 468 | - |

# How to order

| 1. | 2. | 3. | 4. | 5. | 6. | 7. | 8. | 9. | 10. | 11. | 12. |
|---|---|---|---|---|---|---|---|---|---|---|---|
| PVE | 300 | A | 10 | - | 2 | 0 | 3 | L | R2Z3 | , | SBRT |

| 1. | Product type |
|---|---|
| PV | Open |
| PVE | Enclosed |
| PVE/S | Enclosed /sealed |
| PVS | Sealed |

| 2. | Product size DN |
|---|---|
| 25..600 | Conical mark with directly with conical reduction Example 50-40 |

| 3. | Actuator | | | | | | | | | | | | | | | |
|---|---|---|---|---|---|---|---|---|---|---|---|---|---|---|---|---|
| AKU1C | | | | | | | | EB | | | | H | | MG | |
| Pneumatic | | | | | | | | Electric | | | | Hydraulic | | Manual | |
| Cylinder | | Manual override | | Positioner | | Options | | Type | | Voltage range | | Type | | Type | |
| A | Pneumatic cylinder | BLANK | NONE | BLANK | NONE | BLANK | NONE | E | Electric On-OffAUMA Norm | BLANK | 400V/50hz | H | Hydraulic | M | Manual handwheel |
| A1S | Pneumatic with stainless piston rod, tie rods and painted cylinder | B | Manual override | K | Positioner Neles ND9000 series | U1C | With pneumatic spring FAIL CLOSE | EP | Electric On-Off with feedback unit EWG 01.1, AUMA | B | 380V/50hz | HA | Intergated Solenoid valve 24 VDC | MG | Manual with bevel gear |
| A2S | Pneumatic "Stainless" no painting | | | KF | With integrated (Festo DFPI) positioner a) | U1O | With pneumatic spring FAIL OPEN | ES | Electric On-Off AUMA-Matic | C | 440V/50hz | HB | Intergated Solenoid valve 110VAC | MCW | Chainwheel |
| | | | | KL | Standard Positioner with special auxliaries or other brand than Flowrox Selected Standard | U2C | With pneumatic spring (Pressure switch) FAIL CLOSE c) | EO | Electric On-Off with positioner, Aumatic | D | 525V/50hz | HC | Intergated Solenoid valve 230VAC | | |
| | | | | | | U2O | With pneumatic spring (Pressure switch) FAIL OPEN c) | EL | Electric (Other) | E | 460V/60hz | HP | Hydraulic positioner | | |
| | | | | | | VC | With mechanical spring FAIL CLOSE | | | N | Other | HL | Other | | |
| | | | | | | VO | With mechanical spring FAIL OPEN | | | | | | | | |

| 4. | Pressure class (PN)* |
|---|---|
| 1 | 1bar |
| 6 | 6bar |
| 10 | 10bar |
| 16 | 16bar |
| 7 | ANSI 300 |
| 2 | AISI 316 |
| 40 | 40bar |
| 64 | 64bar |
| 100 | 100bar |

| 5. | Flange drilling** |
|---|---|
| 2 | DIN PN 10 |
| 3 | DIN PN 16 |
| 4 | DIN PN 25 |
| 5 | DIN PN 40 |
| 6 | ANSI 150 |
| 7 | ANSI 300 |
| 8 | BS TABLE D |
| 9A | AS TABLE D |
| 9B | AS TABLE E |
| 9C | JIS 10 |
| 9D | JIS 16 |
| 9 | OTHER |

| 6. | Body material* |
|---|---|
| 0 | Cast Iron / Fe |
| 2 | AISI 316 |
| 3 | Aluminium |
| 4 | Other |
| 5 | Polyurethane / polyamide |

| 7. | Flange type |
|---|---|
| | Type 1<br>Type 3<br>Type 4<br>Determined by the valve Flowrox |

| 12. | Sleeve material |
|---|---|
| SBRT | Styrene butadiene |
| EPDM | Ethylene propylene |
| NR | Natural rubber |
| NBR | Nitrile |
| CSM | Hypalon |
| EPDMB | Green liqour sleeve |
| CR | Chloroprene |
| IIR | Butyl |
| NRF | Foodstuff natural rubber |
| NBRF | Foodstuff nitrile |
| HNBR | Hydrogenated nitrile |
| FMP | Fluorine rubber |
| **Additional features:*** | |
| /M | Flowrox SensoMate sleeve |
| /PU | PU-coating inside the sleeve |
| /VAC | Vacuum sleeve |

| 10. | Auxiliaries | | | |
|---|---|---|---|---|
| | Description | Extra info | Applicable actuator | |
| B | Pressure Booster in air supply | Pressure booster determined by Flowrox, used to increase the supply air pressure to secure enough force for pneumatic cylinder. | PNEUMATIC | * |
| F | Filter Regulator + gauge | Filter Regulator + Gauge<br>Flowrox selected model. | PNEUMATIC | * |
| F1 | Filter Regulator + gauge<br>(stainless steel AISI 316) | Filter Regulator + Gauge<br>Flowrox selected model.<br>FESTO PCRP G1/4 & G1/2 | PNEUMATIC | * |
| F5 | Filter Regulator OR Filter Regulator+ gauge | Filter Regulator OR Filter Regulator+ gauge (Non-standard) | PNEUMATIC | |
| H | Hydraulic Handpump (For Hydraulic only) | Manual hydraulic handpump for hydraulic actuators H only. | HYDRAULIC | * |
| J1 | Junction box small (Flowrox Standard) | Junction box small, for limit switches or solenoid valve, IP66, plastic, 2 pcs M12x1.5 and 1 pc M20x1.5, pre-wired. | ANY | * |
| J2 | Junction box large (Flowrox Standard) | Junction box large, for limit switches and solenoid valve, IP66, plastic, 4 pcs M12x1.5 and 1 pc M20x1.5, pre-wired. | ANY | * |
| J4 | Junction Box (Non-Standard) | Junction box out of Flowrox standard scope specification clarified on the proposal and under valve serial number. | ANY | |
| P1 | Stainless steel fittings + Corrosion resitant tubing | High temperature & corrosion resistance | PNEUMATIC | |
| P2 | AISI 316 Fitting and piping | Stainless steel fitting and piping | PNEUMATIC | |
| Q | Quick exhaust valve | Quick exhaust valve to maximize the speed of cylinder. | PNEUMATIC | * |
| R | Readiness for ind. Limit switches | Readiness for d18mm inductive limit switches. | ANY | * |
| R1 | AC/DC (18mm cylindrical switch)<br>(Flowrox Standard) | AC/DC,2-wire type,(24…240VAC / 24…240VDC)<br>Flowrox selected model | ANY | * |
| R2 | DC, NPN (18mm cylindrical switch)<br>(Flowrox Standard) | DC,3-wire type, PNP (12…24V)<br>Flowrox selected model | ANY | * |
| R3 | DC, NPN (18mm cylindrical switch)<br>(Flowrox Standard) | DC,3-wire type, NPN (12…24V)<br>Flowrox selected model | ANY | * |
| R5 | Limit switch<br>(Non-Standard) | Limit switch out of Flowrox standard scope specification clarified on the proposal and under valve serial number. | ANY | |
| S | Magnetic limit switches<br>(Flowrox Standard) | Magnetic limit switches, attached to aluminium pneumatic cylinder actuators. Cylinder fitted with magnetic piston. | PNEUMATIC | * |
| S5 | Magnetic limit switches<br>(Non-Standard) | Magnetic limit switches, attached to aluminium pneumatic cylinder actuators. Cylinder fitted with magnetic piston. | PNEUMATIC | |
| T | Mechan. Limit switches<br>(Flowrox Standard) | Mechanical limit switches<br>Flowrox selected model | ANY | * |
| T5 | Mechan. Limit switches<br>(Non-Standard) | Mechanical limit switches (Non-standard)<br>Consult with Flowrox | ANY | |
| Z1 | Solenoid valve, 24VDC, Monostable<br>(Flowrox Standard) | Solenoid valve 24 VDC (for pneumatic actuator) with necessary tubing Flowrox selected model, monostable (Single coil). | PNEUMATIC | * |
| Z1B | Solenoid valve, 24VDC, Bistable<br>(Flowrox Standard) | Solenoid valve 24 VDC (for pneumatic actuator) with necessary tubing Flowrox selected model, Bistable (Double coil). | PNEUMATIC | * |
| Z2 | Solenoid valve, 230V, 50/60Hz, Monostable<br>(Flowrox Standard) | Solenoid valve 230V - 50/60Hz (for pneumatic actuator) with necessary tubing Flowrox selected model, monostable (Single coil). | PNEUMATIC | * |
| Z2B | Solenoid valve, 230V, 50/60H, Bistable<br>(Flowrox Standard) | Solenoid valve 230V - 50/60Hz (for pneumatic actuator) with necessary tubing Flowrox selected model, Bistable (Double coil). | PNEUMATIC | * |
| Z3 | Solenoid valve, 110V, 50/60Hz, Monostable<br>(Flowrox Standard) | Solenoid valve 110V, 50/60Hz (for pneumatic actuator) with necessary tubing Flowrox selected model, monostable (Single coil). | PNEUMATIC | * |
| Z3B | Solenoid valve, 110V, 50/60Hz,Bistable<br>(Flowrox Standard) | Solenoid valve 110V, 50/60Hz (for pneumatic actuator) with necessary tubing Flowrox selected model Bistable (Double coil). | PNEUMATIC | * |
| Z5 | Solenoid valve, 24VDC, Monostable<br>(Non-Standard) | 24 VDC monostable (Single coil) solenoid valve out of Flowrox standard scope specification clarified on the proposal and under valve serial number. | PNEUMATIC | |
| Z5B | Solenoid valve, 24VDC, Bistable<br>(Non-Standard) | 24 VDC Bistable (Double coil) solenoid valve out of Flowrox standard scope. To be specified on the proposal and under valve serial number. | PNEUMATIC | |
| Z6 | Solenoid valve, 230V, 50/60Hz, Monostable<br>(Non-Standard) | 230V 50/60Hz monostable (Single coil) solenoid valve out of Flowrox standard scope. To be specified on the proposal and under valve serial number. | PNEUMATIC | |
| Z6B | Solenoid valve, 230V, 50/60H, Bistable<br>(Non-Standard) | 230V 50/60Hz Bistable (Double coil) solenoid valve out of Flowrox standard scope. To be specified on the proposal and under valve serial number. | PNEUMATIC | |
| Z7 | Solenoid valve, 110V, 50/60Hz, Monostable<br>(Non-Standard) | 110V 50/60Hz monostable (Single coil) solenoid valve out of Flowrox standard scope. To be specified on the proposal and under valve serial number. | PNEUMATIC | |
| Z7B | Solenoid valve, 110V, 50/60Hz,Bistable<br>(Non-Standard) | 110V 50/60Hz Bistable (Double coil) solenoid valve out of Flowrox standard scope. To be specified on the proposal and under valve serial number. | PNEUMATIC | |
| X | Must be specified | Additional auxiliary equipment not listed. | ANY | |

* Flowrox standard options

rotork®
Controls

## Introducing the new generation of intelligent valve control.

For over 50 years Rotork has used innovation in designing reliable, flexible and robust valve actuators and control systems. Continuing our ethos of evolving design, the 3rd generation IQ multi-turn actuator is now available. Reliability standards have been set even higher, it is simpler to commission and use and is unrivalled in its ability to provide valve and process control operational data.

### Key benefits of the 3rd generation IQ

- Valve position monitoring during power loss through simple and robust Rotork absolute encoder
- Large information-rich backlit display
- Advanced dual stacked display presents valve and process data for asset management and data analysis
- In the event of power failure actuator display and remote contacts are maintained
- Toughened glass screen plus optional environmental shield
- Outstanding environmental protection
- Non-intrusive setting – no cover removal required using secure *Bluetooth*® connection
- Enhanced reliability through solid state controls; reduced internal wiring; simplified torque sensor
- Detachable thrust bases across the entire range
- Advanced realtime status reporting
- Configurable datalogger functionality, including service alarms
- Plug & socket option available

# IQ Range

**3rd Generation**
**Intelligent Electric Actuator**

IQ3

**Redefining** Flow Control

rotork®
Controls


## Outstanding reliability

Valve operation must be reliable. Rotork IQ actuators are designed to meet the toughest applications and engineered for a lifetime of uninterrupted service. Built on the Rotork drive train, proven for over 40 years, 3rd generation IQ actuators feature numerous enhancements including:

- Advanced absolute position measurement
- Simplified control components
- Increased thrust base integrity; separable across all sizes
- High immunity from spurious signals
- Configurable motor drive "enable" input which stops the actuator operating unless a signal is applied
- Casing material selection and coatings have been designed for improved corrosion protection

Reliability of equipment depends on the protection provided by its enclosure. IQ retains the Rotork developed double-sealed, non-breathing, non-intrusive enclosure proven to maximise operational reliability. Regardless of whether the actuator is in a hazardous location or not, the fully sealed enclosure provides the highest reliability.

## Asset management

With an advanced dual stacked display, position, torque, status and configuration data is clear and immediate. In addition the valve, actuator and process data is available on screen or in the control room. Valve stroke torque/thrust graphs, duty trend logs, vibration levels and valve & actuator manufacturing data can be extracted by the user and stored as the basis for planned maintenance and operational activities, process performance characteristics and comparison.

Commissioning and configuring 3rd generation IQ actuators is faster and simpler than ever. In addition to a new and intuitive user interface, entire operations can now be carried out in moments and datalogger data downloaded using the supplied Rotork *Bluetooth*® Setting Tool Pro.

## Technological Advances

### Position

Reliable valve position sensing is critical. Using the latest technology and after years of testing, the patented Rotork IQ absolute encoder is contactless, has only four active parts, can measure up to 8,000 output turns and has redundancy and self checking. Unlike existing absolute encoder designs, this technological breakthrough increases position sensing reliability while providing zero-power position measurement.

### Display

The dual stacked display allows large segment character position displays down to -50 °C while the matrix display provides detailed setting, status and diagnostic multilingual screens. Overall the display is 30% bigger, is backlit to

provide excellent contrast even in the brightest ambient light conditions and is protected by a toughened glass window. An optional protective clip-in cover is available where high UV levels or abrasive environments are present.

### Torque

Now enhanced to provide increased integrity and performance, torque sensing is simple, accurate with high resolution and extremely reliable over the life of the actuator. Unlike other systems employed, the IQ system of torque measurement has the advantage of being independent of voltage and temperature variations.

### Control

Control elements such as main control and network interface cards, like those used with fieldbus systems, are connected using an internal bus system based on CAN, reducing wiring and connections and increasing reliability.

### Indication power

With the absolute encoder, a battery is not required for position sensing and tracking. As all configuration and datalogger data is stored in non-volatile EEPROM memory, all settings are safe when no power is available. However, to maintain the display and ensure remote indication is kept updated, allow data logging and power off commissioning, an indication battery is included as standard. Reduced power consumption means the battery has an exceptionally long life and low-cost replacements are available from suppliers globally.

### Optimised for preventative maintenance

All IQ actuators incorporate a sophisticated datalogger, which can provide comprehensive data capture and analysis for planned maintenance and troubleshooting issues with valves and processes. They capture:

- Valve torque profiles
- Operational starts profiles
- Operational, vibration and temperature trend logs
- Event log

In addition, asset management data regarding the actuator and the valve is stored within the actuator and available for download. Specific asset management information includes:

- Running time
- Average torque
- Starts
- Life statistics

As part of the ongoing commitment to improving asset management and providing reliable data for optimised preventative maintenance, the 3rd generation IQ now includes configurable service / maintenance alarms.

The alarm parameters can be set in the assets section of the setup menus and include:

- Open torque levels
- Close torque levels
- Starts/Hr
- Total starts
- Total turns
- Service intervals

With 3rd generation IQ actuators this data can be viewed in realtime using the large dual stacked display. In addition, the data can be downloaded wirelessly with the Rotork *Bluetooth*® Setting Tool Pro or to a PC and analysed using the Rotork Insight2 software.

### Safe manual operation

In case of an emergency, power outage or failure of the control network, IQ actuators can be operated by hand. A manual clutch and handwheel allow an operator to disengage the motor and operate the valve independently, without risk of damage or injury.

Where the location requires it, the clutch can be padlocked into position to prevent accidental or unauthorised manual operation.

Manual movements of the valve are recorded and logged by the actuator. Position sensing in Rotork IQ actuators is highly reliable (power on or off) thanks to the unique robust and simple design of the absolute encoder.

### Network system connectivity

With the addition of an appropriate option card, the IQ actuator can be incorporated into a number of different fieldbus control systems. The IQ actuator can be utilised within the Rotork Pakscan control system, either wired or wirelessly, and the major open Fieldbus protocols including Profibus®, Foundation Fieldbus®, Modbus and HART®.

# rotork®
## Controls

### 1 Hand operation

Direct drive and geared handwheel sized for effective manual operation of the valve. Handwheel drive is independent of the motor drive and is selected with a lockable hand/auto lever for safe operation even when the motor is running.

Motor operation always has preference unless the hand/auto lever is purposely locked into 'hand drive'. Lost motion 'hammerblow' action is provided with both direct and geared handwheels.

### 2 Environmental sealing

The Rotork double-sealed terminal compartment results in the actuator enclosure being completely sealed, protecting the actuator from the environment for life. Using the supplied Rotork *Bluetooth*® Setting Tool Pro, no covers need to be removed for commissioning, adjusting, analysis or accessing the actuator data log.

### 3 Display

The advanced dual stacked display is significantly larger, clearer and has a wide viewing angle making it easily legible from a distance. In normal mode the LCD display indicates valve position and can operate from -50 °C up to 70 °C.

The matrix layer provides high resolution screens for setting menus, status, alarm and graphical data log screens such as valve torque profiles. Position indication lights (red, yellow and green) are duplicated each side of the display. All display elements are protected by a 13 mm toughened glass window with an optional shield for protection against abrasive media such as sand and UV light.

### 4 Local controls

Local open/close and lockable Local/Stop/Remote selectors are coupled magnetically to the designated switches and therefore do not penetrate the control cover. This further enhances the non-intrusive protection of the IQ.

### 5 Position control

The unique Rotork patented absolute position sensor is highly accurate and can measure up to 8,000 output turns as standard. With only four active parts it is very simple and robust, providing the most reliable position sensing regardless of the availability of electrical power. It also includes built-in redundancy and self-checking.

### 6 Proven drive train

The drive train and motor uses the proven basic design principals employed for over 40 years. Simple, reliable and robust, the components are oil bath lubricated (for life).

### 7 Separable bases

For all sizes the thrust and non-thrust base types are separate to the gearcase allowing easy installation. Should the actuator be removed, the base can be left on the valve to maintain its position. All bases conform to attachment standards ISO5210 or MSS SP 102.


IQ3
1
6
5
7

# rotork
## Controls

### Local diagnostics and setup

The large dual stacked, hi-resolution display, with positional characters that are 25 mm high, is unrivalled in visibility for all lighting and orientation conditions. Consisting of a static, high-contrast positional display and a fully configurable dot-matrix LCD behind, the IQ offers the easiest, user-friendly configuration and data analysis ever seen in the actuation world.

### Configurable Home-screens

With a mixture of the static and dot-matrix displays, there are now four configurable home-screens available to the user. The four screens reflect the parameters most commonly required to analyse operation at-a-glance:

- Positional information with input demand (digital and analogue)


Using the Rotork *Bluetooth*® Setting Tool Pro, each of these screens can be easily accessed with a press of a button. Alternatively you can select one of the four screens to be continually displayed in the setup menu.

### User friendly setup menus

A single press of a button on the Rotork *Bluetooth*® Setting Tool Pro takes you into the user-friendly setup menu. This menu has been designed and structured to reduce reliance on having a written manual to hand. With large, clear characters available in many languages, setup and configuration has never been so easy.

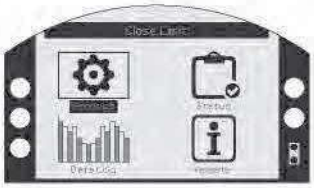


### Graphical datalogger

Greater amounts of data and analytical screens are now available in the datalogger and viewable locally. The datalogger screens are displayed on a 168 x 132 pixel dot-matrix display and can display anything from a torque vs position graph to statistical operational data.

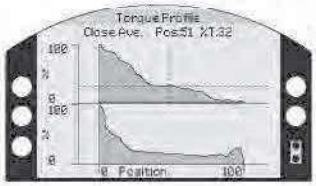


### Asset management

Not only can you store information relating to the actuator, but also the valve and gearbox. This includes data about build (class, size, ratio and tag numbers) along with service information (commission date, service date etc).

- Actuator data


- Valve data


- Gearbox data


- Service history

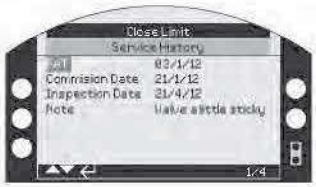

# IQ Range IQ3

## Intelligent Electric Actuator

**Features across the 3rd generation IQ range include:**

- Three-phase, direct current and single-phase variants
- Watertight and hazardous area enclosures
- Double-sealing
- Handwheels for emergency and ease-of-use operation
- Oil bath lubrication
- Advanced, multilingual display for status and setup
- Detailed datalogging
- Setting and data capture using the supplied Rotork *Bluetooth®* Setting Tool Pro
- InSight2 PC software for valve performance analysis
- Highly intuitive user interface
- Comprehensive control and flexibility

### IQ

IQ multi-turn 3-phase electric actuators designed for isolation or regulation duties (S2 & S3/Class A & B) of up to 60 starts per hour.

Direct torque output range from 34 Nm (25 lbf.ft) to 3,000 Nm (2,200 lbf.ft).

With the addition of second stage gearboxes, multi-turn output torque up to 43,000 Nm (31,715 lbf.ft) and quarter-turn up to 1,000,000 Nm (737,561 lbf.ft) are available.

### IQM

The modulating version of the IQ 3-phase electric actuator has a solid state reversing starter in place of the electro-mechanical contactors. They feature fast-response remote control circuits for rapid control. To optimise positional control, the solid state starter also adds an electronic motor 'brake' feature.

The 'hammer-blow' drive - for shifting infrequently used valves - is not included in this model. IQM is suitable for up to 1,200 starts per hour (S4/Class C).

With the addition of second stage gearboxes, IQM multi-turn output seating torque up to 3,600 Nm (2,655 lbf.ft) and quarter-turn up to 58,000 Nm (42,778 lbf.ft) are available.

### IQML

Benefiting from all the features of the IQM 3-phase electric actuator, the IQML has a linear output drive providing modulating thrust output of up to 150 kN (33,721 lbf).

### IQS

IQS actuators are single phase versions of IQ actuators. Torque range from 65 Nm (48 lbf.ft) to 450 Nm (332 lbf.ft).

With the addition of second stage gearboxes, single-phase multi-turn output torque up to 3,000 Nm (2,212 lbf.ft) and quarter-turn up to 208,500 Nm (153,781 lbf.ft) are available.

### IQD

IQD actuators are direct current powered versions of IQ actuators. Torque range 34 Nm (25 lbf.ft) to 305 Nm (225 lbf.ft). Voltage ranges available are 24 VDC, 48 VDC and 110 VDC (limited size/voltage availability – refer to PUB002-038 for details).

With the addition of second stage gearboxes, DC multi-turn output torque up to 1,500 Nm (1,106 lbf.ft) and quarter-turn up to 132,000 Nm (97,358 lbf.ft) are available.

### Special Designs

If you require an IQ actuator for duties that are not covered by our standard range, we are happy to discuss custom solutions.

# MISCOWATER – TW ASSOCIATES
# TERMS & CONDITIONS OF SALE

1. ACCEPTANCE

When the Buyer signifies acceptance of this quotation by submission of a Purchase Order or signed MISCOWATER Quotation, it shall become a binding contract when accepted and signed by an authorized signer of the Seller (MISCOWATER). Any changes or amendments to this proposal made by the Buyer must have MISCOWATER's approval in writing to become a part of this contract.

2. DELIVERY

Any shipment or delivery date recited represents our best estimate, but no liability, direct or indirect, is assumed by MISCOWATER for failure to ship or deliver on such dates. Unless otherwise directed, MISCOWATER shall have the right to make early or partial shipments and invoices covering the same to Buyer shall be due and payable in accordance with payment terms hereof. FOB shall be origin.

3. APPROVAL DRAWINGS

Any preliminary drawings or literature attached to our quotation are for illustration purposes only to show approximate arrangements. Specific drawings and submittal data will be furnished for approval as required after receipt and acceptance of the Buyer's order. Fabrication of products or equipment ordered will not begin until approval and direction to proceed is received in writing.

4. PAYMENT

Payment terms, upon credit approval, are Net 30 Days from the date of each invoice issued for each partial or final shipment. Flow down provisions are not accepted. Retention is not allowed. In the event any payment becomes past due, a charge of 1.5% will be assessed monthly.

5. TAXES AND BONDS

Taxes and bonds are NOT included in our pricing. Any applicable taxes or bonds will be added to the price and shown separately on each invoice.

6. CLAIMS AND BACKCHARGES

Buyer agrees to examine all materials immediately upon delivery and report to Seller (MISCOWATER) in writing any defects or shortages noted no later than 10 days following the date of receipt. The parties agree that if no such claim is made within said time, it shall be considered acceptable and in good order with respect to any defect or shortage which would have been revealed by such an inspection. In no event will MISCOWATER be responsible for any charge for modification, servicing, adjustment or for any other expense without written authorization from MISCOWATER prior to the performance of any such work.

7. SECURITY INTEREST & TITLE

Until all amounts due MISCOWATER have been paid in full, Seller shall retain a security interest in the product and have all rights of a secured party under the California Uniform Commercial Code, including the right to repossess the product or equipment without legal process.

8. WARRANTY

MISCOWATER warrants that the product furnished will be free from defects in material and workmanship when installed, operated and maintained under design conditions and in accordance with the manufacturer's written instructions. Warranties will expire (18) months after shipment or twelve (12) months after start-up, whichever occurs first. Expandable items such as filter or scrubber media are excluded from this warranty.

THIS WARRANTY, INCLUDING THE STATED REMEDIES, IS EXPRESSLY MADE BY SELLER AND ACCEPTED BY PURCHASER IN LIEU OF ALL OTHER WARRANTIES. SELLER MAKES NO WARRANTIES, EXPRESSED OR IMPLIED, OF MERCHANTABILITY, FITNESS OR OTHERWISE, WHICH EXTEND BEYOND THE DESCRIPTION OF THE PRODUCT HEREIN. SELLER WILL NOT BE LIABLE FOR ANY CONSEQUENTIAL, INCIDENTAL OR LIQUIDATED DAMAGES, AND IN NO EVENT SHALL BE LIABLE FOR ANY AMOUNT IN EXCESS OF THE PURCHASE PRICE OF THE PRODUCT PURCHASED ON THIS ORDER.

The foregoing is Seller's only obligation and Buyer's exclusive remedy for breach of warranty,

9. CANCELLATION

Should this order be cancelled, Buyer shall be obligated to pay for the level of work performed and products shipped. Work performed includes any engineering, calculations, preparation of submittals, drawings, and/or travel to job site in relation to this order.

10. FIELD WORK

Unless specifically stated on our quotation, installation, start-up service, supervision, operation and training are not included in our pricing of product.

11. COMPLETE AGREEMENT

These terms are intended by the parties as a final expression of their agreement and are intended also as a complete and exclusive statement of the terms of their agreement. No course or prior dealings between the parties and no usages of the trade shall be relevant to supplement or explain any term used in this agreement. This agreement supersedes all prior representations and agreements with respect to the matters set forth herein and may be modified only by a written agreement to and signed by each of the parties.

MISCOWATER: _____ By: _____

Title: _____ Title: _____

Date: _____ Date: _____

THE CITY OF
SANTA FE

# MEMORANDUM

**DATE:** November 22 2022

**TO:** Public Works/Public Utilities Committee

**VIA:** EMILY OSTER, FINANCE DIRECTOR
JOANN LOVATO, PURHASING OFFICER
SHANNON JONES, PUBLIC UTILITIES DEPARTMENT DIRECTOR SJ
MIKE DOZIER, WWM DIVISION DIRECTOR MD

**FROM:** P. Fred Heerbrandt, P.E., Engineer Supervisor, WWMD FH

---

**ITEM**
DBA Miscowater Intermountain/TW Associates Sole Source contract to purchase of seven (7) pinvh valves and five (5) Rotork valve actuators, including shipping and installation services in the total amount of **$142,512.00.00**. The pricing does not include New Mexico Gross Receipts tax. Approval of a BAR/Increase in the amount of $142,512, from the WWMD Cash Balance.

**BACKGROUND**
The Wastewater Management (WWM) Division is requesting approval of the purchase of seven (7) pinch valves and five (5) Rotork electric valve actuators, complete, with installation and startup, through Sole Source acquisition.

The Paseo Real Water Reclamation Facility (PRWRF) uses pich valves within the grit pumping system, located in the Headworks building at the reclamation facility. These are specialty valves that are used on pumping systems for very viscous liquids and semi-solids. The Rotork electric valve operators are the standard electric actuator used throughout the facility. By standardizing on a single electric valve actuator, maintenance is simplifies by reducing the number of spare parts that must be stocked and standardizes maintenance procedures for this common piece of equipment. For this reason, the facility is now standardized on a Rotork electric valve operator. Rotork is exclusively represented by MISCO Water/TW Associates, who is also providing installation services for these valves and actuators. MISCO Water's scope of services includes supplying the valves and actuators, shipping to the PRWRF, installation, and start-up.

**PROCUREMENT METHOD:**
Sole Source Acquisition. Munis # 3203802

**FUNDING SOURCE:**

WWMD Enterprise Fund /Fund 500/Cash Balance PL# WWM2050001

**BAR Funds To:**
Fund: WWMD Enterprise / 500
Org: WWMD Plant / 5000367
Obj: Rep and Maint System Equip 520150

RECOMMENDED ACTION

PUD, WWM, PRWRF respectfully requests approval of Sole Source contract with DBA Miscowater Intermountain/TW Associates in the amount of $142,512.00, plus New Mexico Gross Reciepts Tax, for fiscal year 2023 and a BAR in the amount of $142,512.00 plus NMGRT.

# City of Santa Fe

## Real Estate Summary of Contracts, Agreements, Amendments & Leases

**Section to be completed by department**

1. Munis Contract # 3203802

Contractor: Miscowater Intermountain/TW Associates

Description: **Digester Sludge Pump #2 Replacement Scope and Pricing**

Contract ☒ Agreement ☐ Lease / Rent ☐ Amendment ☐

Term Start Date: **upon approval** Term End Date: **6/30/23**

☑ Approved by Council Date: **Pending**

**Contract / Lease: $142,512.00 - plus New Mexico gross receipts tax.**

Amendment # _____ to the Original Contract / Lease # _____

Increase/(Decrease) Amount $ _____

Extend Termination Date to: _____

☐ Approved by Council Date: _____

**Amendment is for:**

2. **HISTORY of Contract, Amendments & Lease / Rent - Please Elaborate** (option: attach spreadsheet if multiple amendments)

**Original Contract** Sole Source

3. **Procurement History:**

JoAnn Lovato
JoAnn Lovato (Nov 29, 2022 11:11 MST)

Purchasing Officer Review: Date: Nov 29, 2022

Comment & Exceptions: Sole Source posted for 30-days without protest

4. **Funding Source:** **WWMD Enterprise Fund CIP** **Org / Object:** **5000367.520150**

Andy Hopkins
Andy Hopkins (Nov 29, 2022 11:03 MST)

Budget Officer Approval: Date: Nov 29, 2022

Comment & Exceptions: _____

**Staff Contact who completed this form:** **Maya Martinez** Phone # **4271**

Email: **mfmartinez@santafenm.gov**

**To be recorded by City Clerk:**

Clerk # _____

Date of Execution: _____

# CERTIFICATE OF LIABILITY INSURANCE

DATE(MM/DD/YYYY) 07/22/2022

**THIS CERTIFICATE IS ISSUED AS A MATTER OF INFORMATION ONLY AND CONFERS NO RIGHTS UPON THE CERTIFICATE HOLDER. THIS CERTIFICATE DOES NOT AFFIRMATIVELY OR NEGATIVELY AMEND, EXTEND OR ALTER THE COVERAGE AFFORDED BY THE POLICIES BELOW. THIS CERTIFICATE OF INSURANCE DOES NOT CONSTITUTE A CONTRACT BETWEEN THE ISSUING INSURER(S), AUTHORIZED REPRESENTATIVE OR PRODUCER, AND THE CERTIFICATE HOLDER.**

**IMPORTANT: If the certificate holder is an ADDITIONAL INSURED, the policy(ies) must have ADDITIONAL INSURED provisions or be endorsed. If SUBROGATION IS WAIVED, subject to the terms and conditions of the policy, certain policies may require an endorsement. A statement on this certificate does not confer rights to the certificate holder in lieu of such endorsement(s).**

**PRODUCER**
Aon Risk Services, Inc of Florida
1001 Brickell Bay Drive
Suite 1100
Miami FL 33131 USA

CONTACT NAME:
PHONE (A/C. No. Ext): (866) 283-7122 FAX (A/C. No.): (800) 363-0105
E-MAIL ADDRESS:

**INSURED**
TW Associates, LLC dba
MISCOwater
27101 Burbank, Ste B
Foothill Ranch CA 92610 USA

| INSURER(S) AFFORDING COVERAGE | | NAIC # |
|---|---|---|
| INSURER A: | Federal Insurance Company | 20281 |
| INSURER B: | Hartford Fire Insurance Co. | 19682 |
| INSURER C: | Hartford Casualty Insurance Co | 29424 |
| INSURER D: | Lloyd's Syndicate No. 2001 | AA1128001 |
| INSURER E: | | |
| INSURER F: | | |

**COVERAGES** **CERTIFICATE NUMBER:** 570094635988 **REVISION NUMBER:**

THIS IS TO CERTIFY THAT THE POLICIES OF INSURANCE LISTED BELOW HAVE BEEN ISSUED TO THE INSURED NAMED ABOVE FOR THE POLICY PERIOD INDICATED. NOTWITHSTANDING ANY REQUIREMENT, TERM OR CONDITION OF ANY CONTRACT OR OTHER DOCUMENT WITH RESPECT TO WHICH THIS CERTIFICATE MAY BE ISSUED OR MAY PERTAIN, THE INSURANCE AFFORDED BY THE POLICIES DESCRIBED HEREIN IS SUBJECT TO ALL THE TERMS, EXCLUSIONS AND CONDITIONS OF SUCH POLICIES. LIMITS SHOWN MAY HAVE BEEN REDUCED BY PAID CLAIMS.

**Limits shown are as requested**

| INSR LTR | TYPE OF INSURANCE | ADDL INSD | SUBR WVD | POLICY NUMBER | POLICY EFF (MM/DD/YYYY) | POLICY EXP (MM/DD/YYYY) | LIMITS | |
|---|---|---|---|---|---|---|---|---|
| B | X COMMERCIAL GENERAL LIABILITY<br>CLAIMS-MADE X OCCUR<br>GEN'L AGGREGATE LIMIT APPLIES PER:<br>POLICY X PRO-JECT LOC<br>OTHER: | Y | Y | 84CESOF9030 | 03/01/2022 | 03/01/2023 | EACH OCCURRENCE<br>DAMAGE TO RENTED PREMISES (Ea occurrence)<br>MED EXP (Any one person)<br>PERSONAL & ADV INJURY<br>GENERAL AGGREGATE<br>PRODUCTS - COMP/OP AGG | $1,000,000<br>$300,000<br>$10,000<br>$1,000,000<br>$2,000,000<br>$2,000,000 |
| A | AUTOMOBILE LIABILITY<br>X ANY AUTO<br>OWNED AUTOS ONLY<br>HIRED AUTOS ONLY<br>SCHEDULED AUTOS<br>NON-OWNED AUTOS ONLY | Y | Y | 7362-65-82 | 03/01/2022 | 03/01/2023 | COMBINED SINGLE LIMIT (Ea accident)<br>BODILY INJURY ( Per person)<br>BODILY INJURY (Per accident)<br>PROPERTY DAMAGE (Per accident) | $1,000,000 |
| C | UMBRELLA LIAB X OCCUR<br>X EXCESS LIAB CLAIMS-MADE<br>DED RETENTION | | | 84XSON2127 | 03/01/2022 | 03/01/2023 | EACH OCCURRENCE<br>AGGREGATE | $5,000,000<br>$5,000,000 |
| A | WORKERS COMPENSATION AND EMPLOYERS' LIABILITY<br>ANY PROPRIETOR / PARTNER / EXECUTIVE OFFICER/MEMBER EXCLUDED? (Mandatory in NH)<br>If yes, describe under DESCRIPTION OF OPERATIONS below | Y / N<br>N | N / A | 71751236 | 03/01/2022 | 03/01/2023 | X PER STATUTE OTH-ER<br>E.L. EACH ACCIDENT<br>E.L. DISEASE-EA EMPLOYEE<br>E.L. DISEASE-POLICY LIMIT | $1,000,000<br>$1,000,000<br>$1,000,000 |
| D | Env Prof (E&O) | | | HPL210443<br>Claims-Made<br>SIR applies per policy terms & conditions | 07/23/2021 | 09/30/2022 | Per Occurrence<br>SIR<br>Aggregate | $2,000,000<br>$50,000<br>$2,000,000 |

**DESCRIPTION OF OPERATIONS / LOCATIONS / VEHICLES (ACORD 101, Additional Remarks Schedule, may be attached if more space is required)**

RE: Santa Fe Paseo Real WWTP Primary Sludge Pump Replacement, 73 Paseo Real, Santa FE NM 87507. City of Santa Fe is included as Additional Insured in accordance with the policy provisions of the General Liability and Automobile Liability policies. General Liability and Automobile Liability policies evidenced herein are Primary Non-Contributory to other insurance available to an Additional Insured, but only in accordance with the policy's provisions. A Waiver of Subrogation is granted in favor of City of Santa Fe in accordance with the policy provisions of the General Liability, Automobile Liability and Workers' Compensation policies. Should the General Liability and Workers' Compensation policies be cancelled before the expiration date thereof, the policy provisions will govern how notice of cancellation may be delivered to certificate holders in accordance

**CERTIFICATE HOLDER**

City of Santa Fe
801 W. San Mateo Rd.
Santa Fe NM 87507 USA

**CANCELLATION**

SHOULD ANY OF THE ABOVE DESCRIBED POLICIES BE CANCELLED BEFORE THE EXPIRATION DATE THEREOF, NOTICE WILL BE DELIVERED IN ACCORDANCE WITH THE POLICY PROVISIONS.

AUTHORIZED REPRESENTATIVE

*Aon Risk Services Inc. of Florida*

Holder Identifier :

Certificate No : 570094635988

# City of Santa Fe

Treasury Department
200 Lincoln Ave.
Santa Fe, New Mexico 87504-0909
505-955-6551

## BUSINESS REGISTRATION

**Business Name:** TW ASSOCIATES, LLC
DBA: MISCOWATER

**Business Location:** 27101 BURBANK STE. B
FOOTHILL RANCH, CA 92610

**CRS Number:** 02485250003

**Owner:** TW ASSOCIATES, LLC

**License Number:** 233223

**License Type:** Business License - Renewable

**Issued Date:** July 25, 2022

**Classification:** Out of Jurisdiction Business License

**Expiration Date:** July 25, 2023

**Fees Paid:** $10.00

TW ASSOCIATES, LLC
27101 BURBANK STE/ B
FOOTHILL RANCH, CA 92610

THIS IS NOT A CONSTRUCTION PERMIT OR SIGN PERMIT. APPROPRIATE PERMITS MUST BE OBTAINED FROM THE CITY OF SANTA FE BUILDING PERMIT DIVISION PRIOR TO COMMENCEMENT OF ANY CONSTRUCTION OR THE INSTALLATION OF ANY EXTERIOR SIGN.

THIS REGISTRATION/LICENSE IS NOT TRANSFERRABLE TO OTHER BUSINESSES OR PREMISES.

**TO BE POSTED IN A CONSPICUOUS PLACE**

AGENCY CUSTOMER ID: 570000087993

LOC #:

# ADDITIONAL REMARKS SCHEDULE



| AGENCY | NAMED INSURED |
|---|---|
| Aon Risk Services, Inc of Florida | TW Associates, LLC dba |
| POLICY NUMBER: See Certificate Number: 570094635988 | |
| CARRIER: See Certificate Number: 570094635988 — NAIC CODE: | EFFECTIVE DATE: |

## ADDITIONAL REMARKS

**THIS ADDITIONAL REMARKS FORM IS A SCHEDULE TO ACORD FORM,**

**FORM NUMBER:** ACORD 25 **FORM TITLE:** Certificate of Liability Insurance

Additional Description of Operations / Locations / Vehicles:

with the policy provisions of each policy.

# CITY OF SANTA FE PROCUREMENT CHECKLIST

Contractor Name: Miscowater Intermountain/TW Associates
Procurement Title: Digester Sludge Pump #2 Replacement Scope and Pricing

Procurement Method: State Price Agreement ☐ *Cooperative* ☐ *Sole Source* ☒ *Other* ☐ *Quote*

*Exempt* ☐ *Request For Proposal* (RFP) ☐ *Invitation To Bid (ITB)* ☐ *Contract under 60K* ☐ *Contract over 60K* ☐

Department Requesting PUD/WWMD Staff Name P. Fred Heerbrandt, P.E.,

**Procurement Requirements:**
*A procurement file shall be maintained for all contracts, regardless of the method of procurement. The procurement file shall contain the basis on which the award is made, all submitted bids, all evaluation materials, score sheets, quotations and all other documentation related to or prepared in conjunction with evaluation, negotiation, and the award process. The procurement shall contain a written determination from the Requesting Department, signed by the purchasing officer, setting forth the reasoning for the contract award decision before submitting to the Committees. .*

## REQUIRED DOCUMENTS FOR APPROVAL BY PURCHASING*

| YES | N/A | |
|---|---|---|
| ☒ | ☐ | Approved Procurement Checklist (by Purchasing) |
| ☒ | ☐ | Memo addressed to City Manager (under 60K) Committees/City Council (over 60K) |
| ☐ | ☒ | State Price Agreement |
| ☐ | ☒ | RFP |
| ☐ | ☒ | Evaluation Committee Report |
| ☐ | ☒ | ITB |
| ☐ | ☒ | Bib Tab |
| ☐ | ☒ | Quotes (3 valid current quotes) |
| ☐ | ☒ | Cooperative Agreement |
| ☒ | ☐ | Sole Source Request and Determination Form |
| ☐ | ☒ | Contractors Exempt Letter |
| ☐ | ☒ | Purchasing Officers approval for exempt procurement |
| ☐ | ☒ | BAR |
| ☐ | ☒ | FIR |
| ☒ | ☐ | Executed Contract, Agreement or Amendment |
| ☒ | ☐ | Current Business Registration and CRS numbers on contract or agreement |
| ☒ | ☐ | Summary of Contracts and Agreements form |
| ☒ | ☐ | Certificate of Insurance |
| ☐ | ☐ | All documentation presented to Committees |
| ☐ | ☐ | Other: _____ |

| | | |
|---|---|---|
| PUD/ WWMD / Paul Fred Heerbrandt P. Fred Heerbrandt, P.E. (Nov 22, 2022 15:21 MST) | Engineer Supervisor | 11/22/22 |
| Department Rep Printed Name (attesting that all information included) | Title | Date |
| JoAnn Lovato JoAnn Lovato (Nov 29, 2022 11:11 MST) | Contracts Supervisor | Nov 29, 2022 |
| Purchasing Officer (attesting that all information is reviewed) | Title | Date |

Include all other substantive documents and records of communication that pertain to the procurement and any resulting contract.

*

Type text here

# City of Santa Fe, New Mexico

## SOLE SOURCE REQUEST AND DETERMINATION FORM

**This sole source request form <u>must</u> be submitted to the City of Santa, Purchasing Division for authorization, determination and processing by the Chief Procurement Officer (CPO).**

*Please ensure to complete this form in its entirety* ***- (*) must be completed.***

***Date** October 4, 2022

***Prepared By** P. Fred Heerbrandt, P.E. ***Title** Engineer Supervisor WMD

***Vendor Name** DBA Miscowater Intermountain/TW Associates

***Address:** 651 Corporate Circle, Suite 100

***City:** Golden ***State:** CO ***Zip Code:** 80401

***Description of Goods/Service to be procured: Valves with electrical actuators, including installation**

***Estimated Cost:** $142,512 **Term of Contract:** **One (1) to Four (4) year from award)** 1

***Sole Source Request Justification Questions 1-3.**

1. **Explain the purpose/need of purchase. Ensure to include a thorough scope of work for the services, construction or items of tangible personal property (if this is an amendment request to an existing contract, attach current contract).**

This expenditure is for seven pinch valves, and 5 electric valve actuators, plus their installation. These valves are used in the headworks building and are used with the grit pumping system. Grit is a difficult material to pump since it is a thick slurry of sand, seeds, and other dense particles. The pinch valves are specialty valves that allow closing without binding when used with a grit slurry. These valves must be present so that the grit pumps can be removed from service for maintenance or replacement. The anticipated functional life of the equipment is 20 years. Lead time for delivery of the equipment is 14 – 17 weeks.

# City of Santa Fe, New Mexico

**2. Provide a detailed explanation of the criteria developed and specified by the department as necessary to perform and/or fulfill the contract.**

☐ **The contractor has affirmed sole source for the services, construction or items of tangible personal property *(Attach memo from vendor)*. Provide documentation of due diligence for other possible vendors/contractors to provide the requested services/goods proved unsuccessful; or**

X **Other: explanation of the reasons, qualifications, proprietary rights or unique capabilities (*unique and how this uniqueness is substantially related to the intended purpose of the contract)* of the prospective contractor that makes the prospective contractor *the one source* capable of providing the required professional service, service, construction or item(s) of tangible personal property. (Please do not state the source is the "best" source or the "least costly" source. Those factors do not justify a "sole source.") U*nique and how this uniqueness is substantially related to the intended purpose of the contract*.**

Valve actuators are used throughout the facility to both remotely operate valves and to provide valve position information to our SCADA system for remote monitoring of valves. We use ROTORK valve actuators at PRWRF. We use this manufacturer exclusively so that we can stock spare parts and are familiar with the maintenance requirements for this equipment without having to stock parts for multiple manufacturers' equipment. ROTORK is exclusively represented by MISCO Water/TW Associates, in the state of New Mexico. The pricing provided by MISCO Water includes the valves, actuators, shipping, and installation.

**3. Explain why other similar professional services, services, construction or item(s) of tangible personal property *cannot* meet the intended purpose of the contract.**

This is proprietary equipment. Other equipment will require stocking a separate set of replacement parts and training of maintenance personnel on this separate piece of equipment. Substituting an "as equal" piece of equipment would not be in the best interest of the facility or the City.

# City of Santa Fe, New Mexico

***Approvals:**

Based on the above facts, the City of Santa Fe Purchasing Officer has made the determination that the justification for a Sole Source procurement is in accordance with the State Procurement Code, Section 13-1-126 Sole source procurement., NMSA 1978 and shall be posted for a 30-day period prior to award.

For

10/05/22

Fran Dunaway, CPO Date
Purchasing Officer for the
City of Santa Fe

**Pursuant to the State Procurement Code, Section 13-1-126 Sole source procurement., NMSA 1978, the 30-day posting period of the Notice of Intent to Award this Sole Source request was met and no obligation to the award to the above referenced contractor were received.** ***This Sole Source determination will be valid for a period of one (1) year from the date of the award.***

For

11/9/22

**Fran Dunaway, CPO Date**
**Purchasing Officer for the**
**City of Santa Fe**

****Required Attachments:***

****Letter from Contractor acknowledging they are the only source (on their business letterhead and signed by the head of business or financial operations),***
****Quote from sole source Contractor***
****Agenda Item to be presented to City Council if over $60,000 for Professional Services and $60,000 for Goods and Non-Professional Services***

October 3rd, 2022

Carlos Casias
Maintenance Supervisor
City of Santa Fe Paseo Real WWTP

Subject: City of Santa Fe Paseo Real WWTP
Headworks Grit Pinch Valves replacement

Dear Mr. Casias:

MISCO Water is pleased to offer the City of Santa Fe a complete furnish and installation quotation for the replacement of QTY of 5 Motor Operated Flanged Pinch valves and QTY of 2 Manual Flanged Pinch valves located in the Paseo Real WWTP Headworks building. The scope of supply includes all labor and materials required to remove and disconnect the existing pinch valves and to install, new flanged pinch valves with Actuators and start-up & commissioning. The scope of supply is outlined in further detail in the table below.

| Item | Description |
|---|---|
| 1 | QTY of 5 – 6" Full Bore Enclosed Flanged Flowrox Pinch valves, CI body, Nitrile Rubber sleeve, rated for 150 psi with Rotork IQ 12 open and close actuators.<br>QTY of 2 – 6" Manual Full Bore Enclosed Flanged Flowrox Pinch valves, CI body, Nitrile Rubber sleeve, rated for 150 psi with manual actuator. |
| 2 | Submittals, Shop Drawings and O&M Manual |
| 3 | Freight to site |
| 4 | All labor and materials needed for Installation is included:<br>- Site measurements to ensure proper installation<br>- Removal of existing 6" pinch valves from the piping.<br>- Installation of new pinch 6" pinch valves<br>- Piping connections including new filler flange fittings and, gaskets to connect new pinch valved to existing piping<br>- On-site actuator start-up and electrical assistance by MISCO Water<br>- Excess material to be placed in owner's onsite dumpster<br>- Exclusions:<br>• Electrical work of disconnecting of the existing actuators and connecting the of the new actuators not included<br>• CID permits by others<br>• Coatings of existing piping and new valves are not included<br>• Work to be performed during normal working hours. |

| | |
|---|---|
| | • Replacement or upgrades of existing electrical gear, equipment, conduits, wire, etc.<br>• SCADA programming<br>• Bypass Pumping<br>• Upgrade of existing concrete pad<br>• Haul-off and disposal of existing valves and actuator<br>• Permits, Fees, engineered drawings<br>• Seismic calculations or Seismic Upgrades<br>• Third party inspection or testing<br>• Hazardous material handling or disposal<br>• Bonds<br>• |

The lead times and construction schedule for the outlined scope of supply are as follows:

- 3-4 weeks from date of agreement with the City of Santa Fe for custom shop drawings (full submittal package to be provided later for informational purposes)
- 12-14 weeks from date of approved shop drawings for shipment of new pinch valves and actuators and needed pipe fittings
- Installation and Start-Up upon delivery of valves and fittings. Exact timing will be coordinated with City staff

The complete price for labor and materials outlined in the scope of supply table above and enclosed valves product data sheet is **$142,512.**
The pricing is valid until December 31st 2022.

Please note the pricing only includes the parts and installation work specifically outlined above. Any additional replacement parts and associated installation work beyond the scope of supply listed above is excluded and MISCO Water reserves the right to reprice should additional replacement parts or site work be needed.

The pricing outlined above does not include New Mexico Gross Receipts tax. The quoted scope of work is based on standard wage rates and insurance policies. MISCO Water reserves the right to reprice our scope of work, should additionally wage, insurance requirements or bonds be deemed necessary by the City.

We trust that you will find this offering complete, but please let us know if you have any additional questions regarding the proposed scope and pricing.

Thank you for your consideration and we look forward to discussing this offering with City staff in more detail in the future.

Nick Lucas
Stefan Oreshkov

MISCO Water TW Associates
720-526-7397
nlucas@miscowater.com
soreshkov@miscowater.com
480-415-7846

# Heavy duty Flowrox™ pinch valves
# Series PV, PVE, PVE/S and PVS

Flowrox™ PV, PVE, PVE/S and PVS heavy duty pinch valves are designed for shut off and control applications involving abrasive or corrosive slurries, powders or granular substances.

In the open position, the valve is full bore with no flow restrictions. During closing, two pinch bars squeeze the valve sleeve shut on the center line. Bubble tight shut-off is provided even if solids have built up on the sleeve wall.

Flowrox control valves are designed for demanding control applications in which conventional valves encounter problems with wear due to increased turbulence. Controllability can be further improved, i.e. linearized and widened, with conical sleeves and smart positioners.

**PV** The open body pinch valve is designed for non-hazardous media, lower pressure, and operating temperatures than the enclosed body. This design isolates vibration and tolerates minor misalignment of the pipeline. It is also light-weight and easy to service.

**PVE** The enclosed body valve is the most common body type for Flowrox pinch valves. Its enclosed design prevents premature sleeve deterioration and protects the sleeve from the environment, making it extremely safe to operate.

**PVE/S** PVE/S includes extra stem and body seals to provide a secondary containment of the fluid in the valve and to prevent leakage to the outside environment from the valve body.

**PVS** The structure of PVS encases all moving parts of the valve. It is optimized for high pressure applications and for aggressive and toxic mediums. The PVS structure has no rising parts.

## Benefits

- Improved process efficiency
- Improved customers' productivity
- Accurate control
- Ease of maintenance
- Extended service intervals

## Features

- 100% tight shut-off
- When compressed, any crystallized particles flake off the sleeve surface.
- Full bore: Ensured free flow of the medium and less pumping energy is required.
- Improved controllability with conical sleeve results in linear control curve.
- Only the sleeve is in contact with the medium and is the only replaceable part. Can be easily changed on site.
- High corrosion resistance and flexible sleeve.


## Sizes

- DN 50 - 800/2" - 32"
- Bigger sizes on request

## Working pressure

Up to 100 bar / 1500 psi

## Pressure classes

- PN 1, PN 4, PN 6, PN 10, PN 16, PN 25, PN 40, PN 64, PN 100

## Materials

- Cast iron / Ductile iron
- Welded steel
- AISI 316
- Aluminium
- Polyurethane / Polyamide

## Flange drillings

- DIN PN 10, DIN PN 16, DIN PN 25, DIN PN 40,
- ASME/ANSI 150, ASME/ANSI 300
- BS TABLE D, AS TABLE D, AS TABLE E
- JIS 10K, JIS 16K
- Others on request

## Exploded view and parts list, type PV

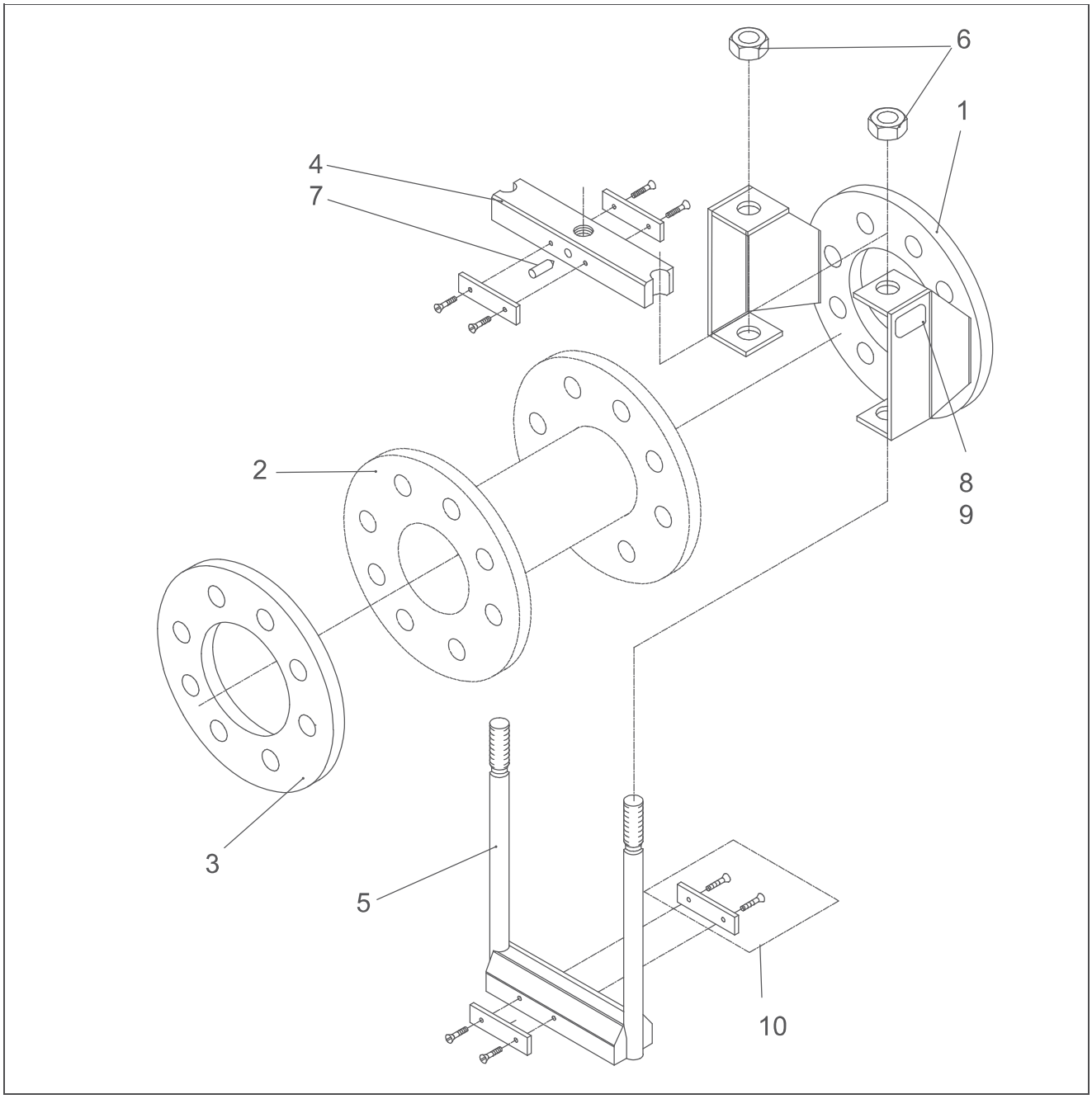


| Part | Description |
|---|---|
| 1 | Valve body |
| 2 | Sleeve |
| 3 | Flange |
| 4 | Upper pinch bar |
| 5 | Lower pinch bar |
| 6 | Hex nut |
| 7 | Set screw |
| 8 | Tag plate |
| 9 | Drive screw |
| 10 | Fixing set |

## Exploded view and parts list, type PVE

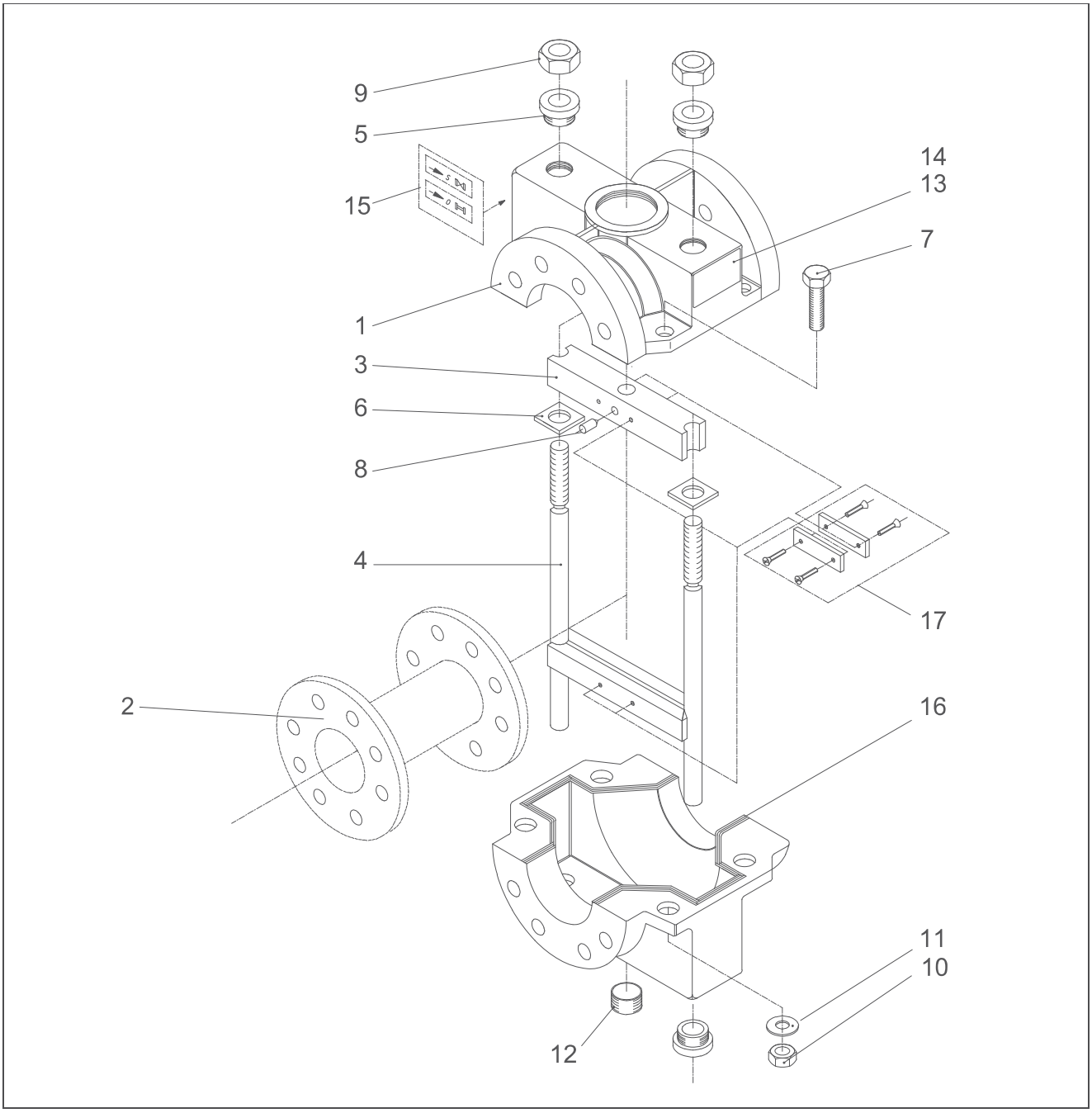


| Part | Description | Part | Description |
|---|---|---|---|
| 1 | Valve body | 10 | Hex nut |
| 2 | Sleeve | 11 | Washer |
| 3 | Upper pinch bar | 12 | Plug |
| 4 | Lower pinch bar | 13 | Tag plate |
| 5 | Bushing | 14 | Drive screw |
| 6 | Guide plate | 15 | Sticker |
| 7 | Hex screw | 16 | Sealing |
| 8 | Set screw | 17 | Fixing set |
| 9 | Hex nut | | |

## Exploded view and parts list, type PVE/S

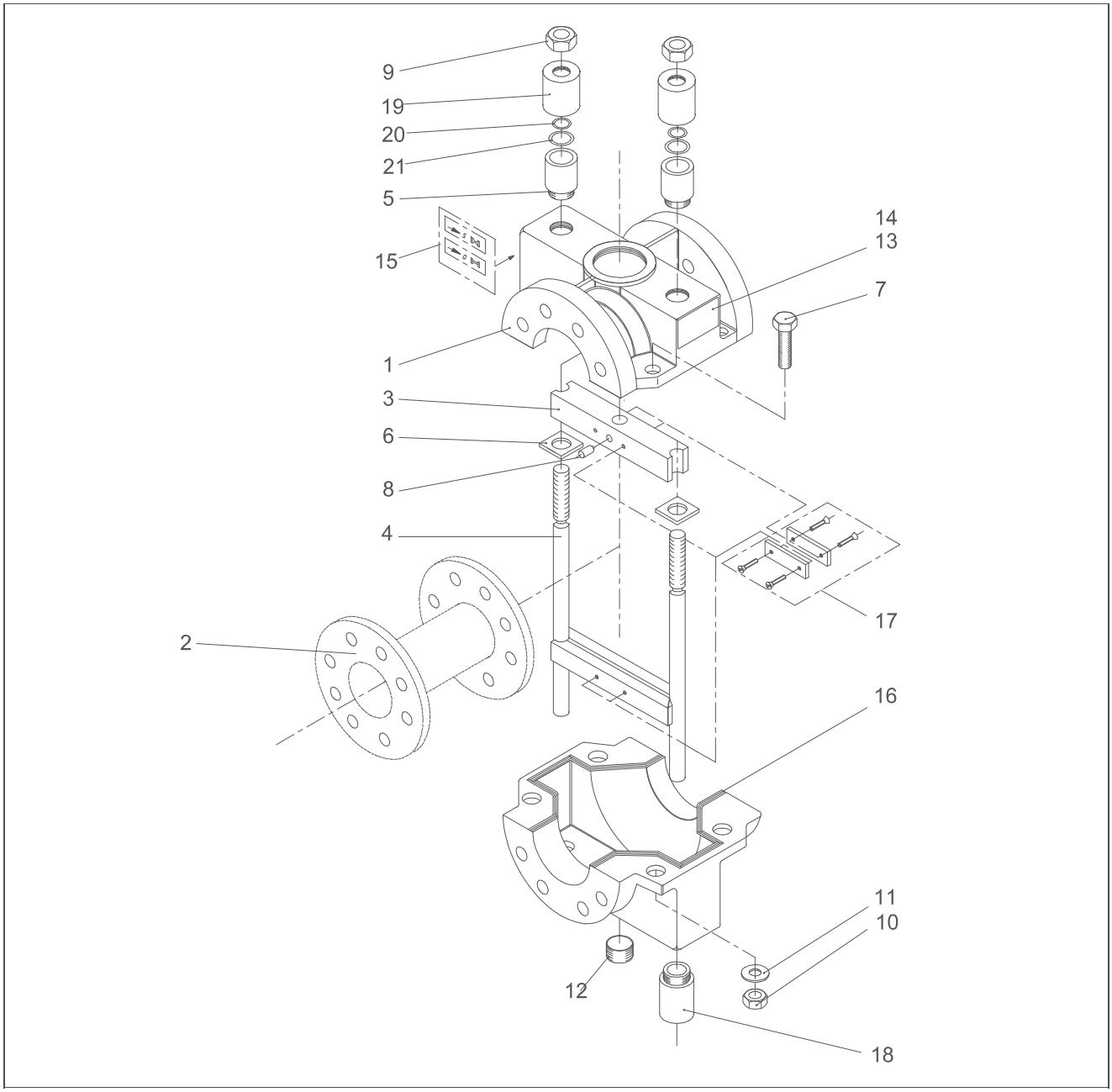


| Part | Description | Part | Description |
|---|---|---|---|
| 1 | Valve body | 12 | Plug |
| 2 | Sleeve | 13 | Tag plate |
| 3 | Upper pinch bar | 14 | Drive screw |
| 4 | Lower pinch bar | 15 | Sticker |
| 5 | Bushing | 16 | Sealing |
| 6 | Guide | 17 | Fixing set |
| 7 | Hex screw | 18 | Bushing |
| 8 | Set screw | 19 | Cover bushing |
| 9 | Hex nut | 20 | Sealing |
| 10 | Hex nut | 21 | Sealing |
| 11 | Washer | | |

## Exploded view and parts list, type PVS

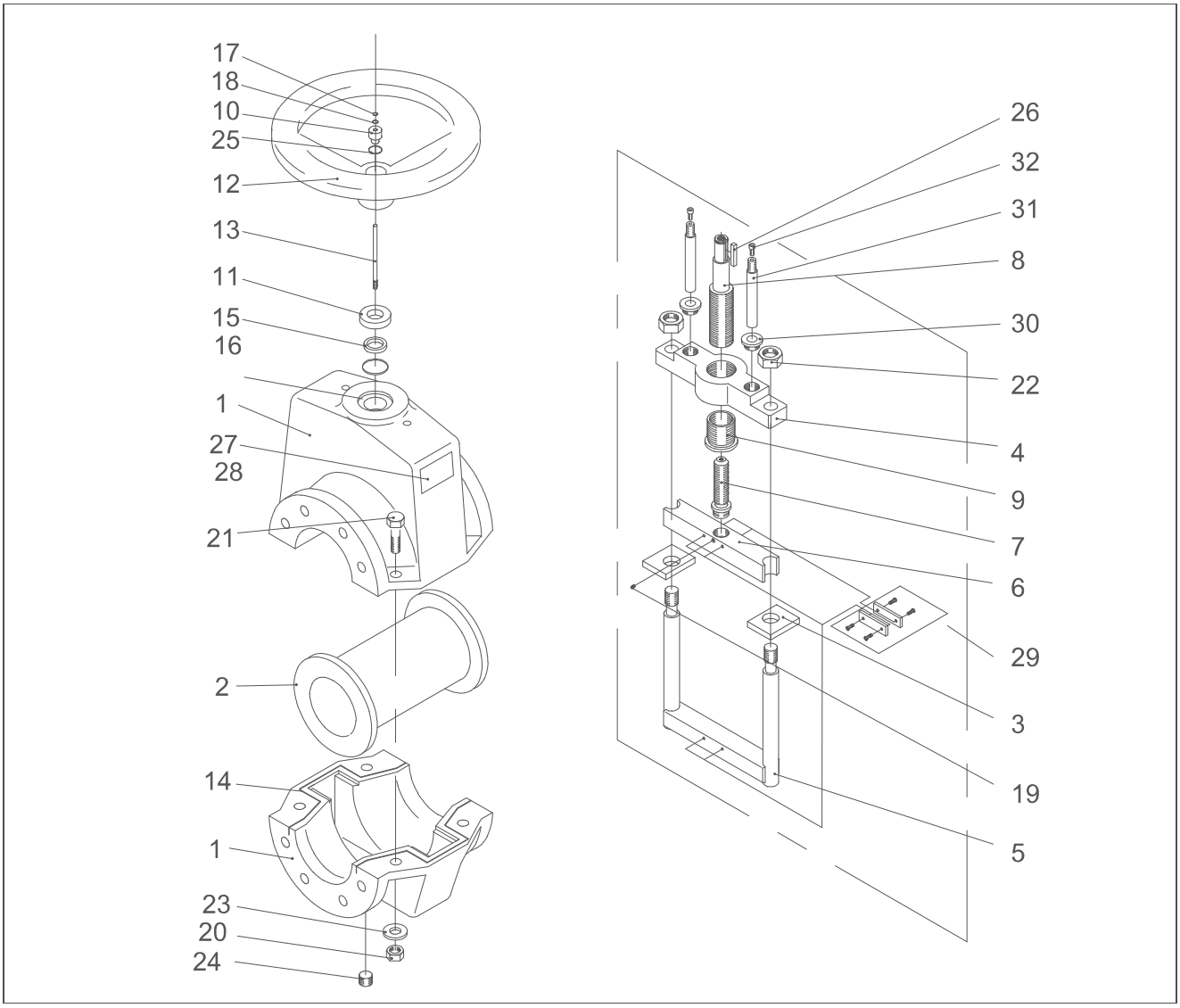


| Part | Description | Part | Description |
|---|---|---|---|
| 1 | Valve body | 17 | Sealing |
| 2 | Sleeve | 19 | Set screw |
| 3 | Quide | 20 | Hex nut |
| 4 | Attachment frame | 21 | Hex screw |
| 5 | Lower pinch bar | 22 | Hex nut |
| 6 | Upper pinch bar | 23 | Washer |
| 7 | Pinch bar stem | 24 | Plug |
| 8 | Handwheel stem | 25 | Locker |
| 9 | Stem nut | 26 | Wedge |
| 10 | Bushing | 27 | Tag plate |
| 11 | Bushing | 28 | Drive screw |
| 12 | Handwheel | 29 | Fixing set |
| 13 | Indicator pin | 30 | Bushing* |
| 14 | Sealing | 31 | Guide bar* |
| 15 | Sealing | 32 | Hex socket head* |
| 16 | Sealing | | |

* Not in all sizes

# Technical specifications

## Type:

Heavy duty PV, PVE and PVS type pinch valves.

## Sizes:

PV: DN 80 - 800 / NPS 3" - 32"
PVE, PV/S, PVS: DN 25 - 800 / NPS 1" - 32"

## Temperature range:

-50°C...+160°C / 32°F...+210°F

## Pressures classes:

PV: 25 bar / 375 psi
PVE, PVE/S, PVS: 0 - 100 bar / 0 - 1500 psi

## Actuators:

- Manual
- Manual with gear
- Pneumatic
- Electric
- Hydraulic

## Construction materials:

Body material:
- Cast iron / Ductile iron
- Welded steel
- AISI 316
- Aluminium
- Polyurethane / Polyamide

Sleeve material:
SBRT = Styrene butadiene
EPDM = Ethylene propylene
NR = Natural rubber
NBR = Nitrile
CSM = Hypalon
EPDMB = Green liqour sleeve
CR = Chloroprene
IIR = Butyl
NRF = Foodstuff natural rubber
NBRF = Foodstuff nitrile
HNBR = Hydrogenated nitrile
FMP = Fluorine rubber
Additional features:*
/M = Flowrox SensoMate sleeve
/PU = PU-coating inside the sleeve
/VAC = Vacuum sleeve
* Some restrictions apply.

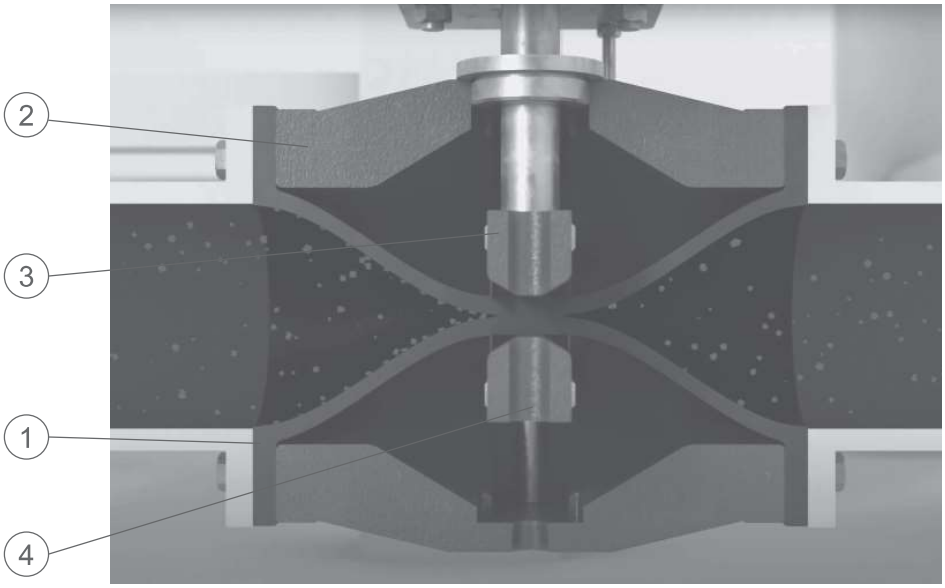


| Part | Description |
|---|---|
| 1 | Sleeve |
| 2 | Body |
| 3 | Upper pinch bar |
| 4 | Lower pinch bar |

The operating principle of Flowrox pinch valves is simple. In the open position, the valve is full bore with no flow restrictions. During closing, two pinch bars squeeze the valve sleeve shut on the centerline. The sleeve is naturally wear-resistant and when particles hit the sleeve's rubber surface, the energy is absorbed and released when the rubber bounces back.

Heavy duty pinch valves provide bubble tight shut-off even if solids have built up on the sleeve wall. When compressed, any crystallized particles flake off the sleeve surface. The full bore structure ensures free flow of the medium.

The construction and materials of the three main components (sleeve, body and actuator) can be tailored to suit your process conditions.

## Dimensions, PV valves

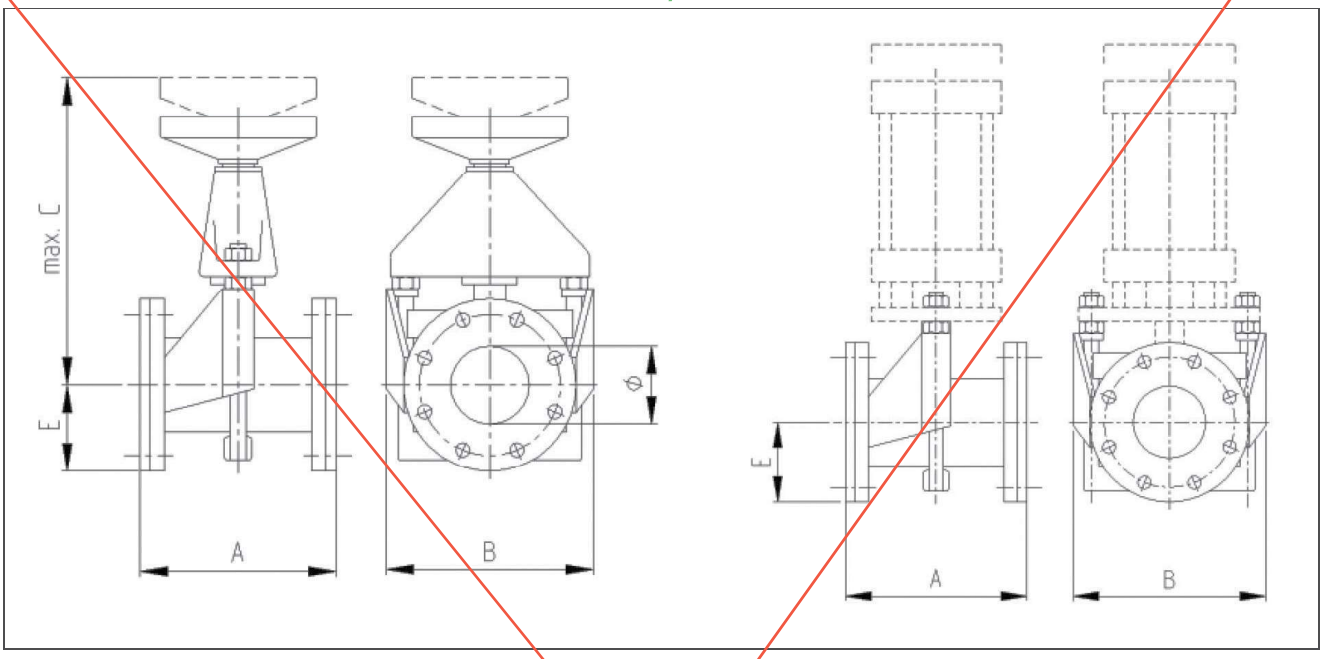


| Valve size (PV) M&A | PN (bar) | A | B | C | E | Weight Manual valves (kg) | Weight Automatic valves (kg) |
|---|---|---|---|---|---|---|---|
| 80 | 1-25 | 200 | 235 | 370 | 100 | 22 | 14 |
| 100 | 1-25 | 250 | 265 | 410 | 110 | 29 | 16 |
| 125 | 1-25 | 310 | 325 | 465 | 135 | 46 | 23 |
| 150 | 1-16 | 375 | 381 | 560 | 143 | 67 | 36 |
| 200 | 1-16 | 500 | 461 | 690 | 170 | 88 | 47 |
| 250 | 1-10 | 625 | 545 | 865 | 210 | 137 | 85 |
| 300 | 1-6 | 750 | 704 | 1020 | 250 | 167 | 100 |

| Valve size (PV) M&A | PN (PSI) | A | B | C | E | Weight Manual valves (lb) | Weight Automatic valves (lb) |
|---|---|---|---|---|---|---|---|
| 3 | 15-365 | 7.9 | 9.3 | 14.6 | 3.9 | 49 | 31 |
| 4 | 15-365 | 9.8 | 10.4 | 16.1 | 4.3 | 64 | 36 |
| 5 | 15-365 | 12.2 | 12.8 | 18.3 | 5.3 | 102 | 51 |
| 6 | 15-240 | 14.8 | 15.0 | 22.0 | 5.6 | 148 | 80 |
| 8 | 15-240 | 19.7 | 18.1 | 27.2 | 6.7 | 194 | 104 |
| 10 | 15-145 | 24.6 | 21.5 | 34.1 | 8.3 | 302 | 188 |
| 12 | 15-75 | 29.5 | 27.7 | 40.2 | 9.8 | 368 | 221 |

## Dimensions, PVE valves

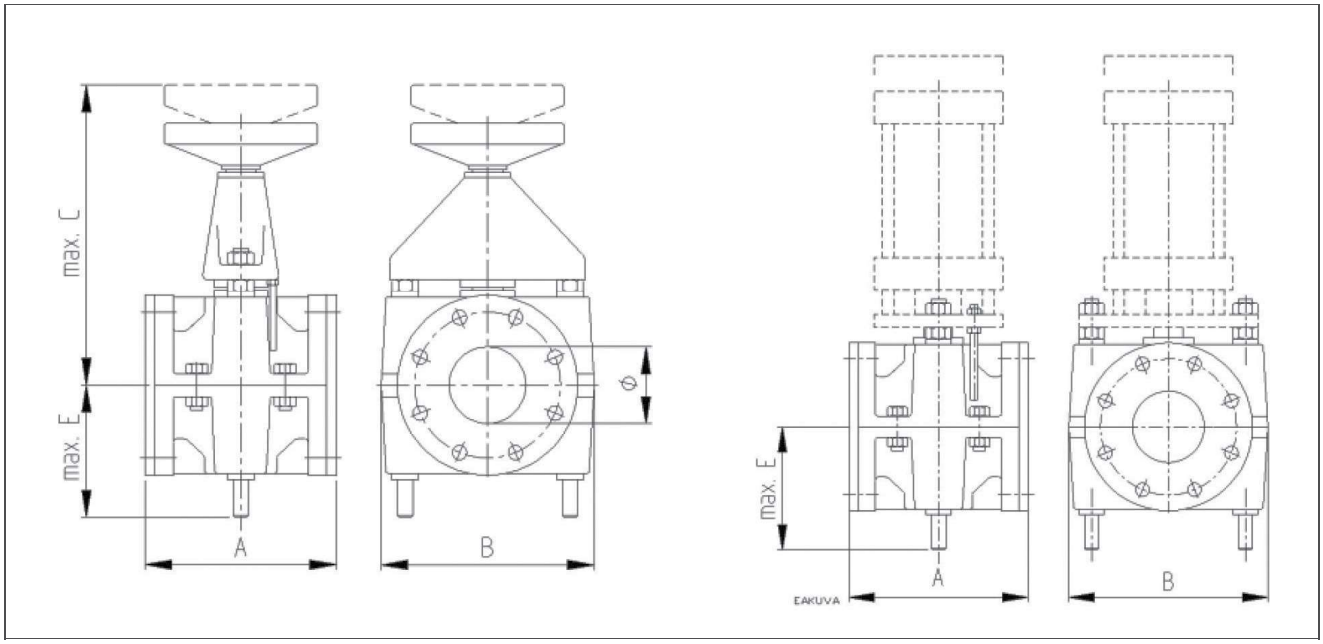


| Valve size (PVE) M&A | PN (bar) | A | B | C | E | Weight Manual valves (kg) | | Weight Automatic valves (kg) | |
|---|---|---|---|---|---|---|---|---|---|
| | | | | | | FE | AL | FE | AL |
| 25 | 1-25 | 165 | 125 | 255 | 87 | 11 | 7 | 8 | 4 |
| 32 | 1-25 | 165 | 140 | 260 | 90 | 14 | 9 | 10 | 5 |
| 40 | 1-25 | 165 | 180 | 265 | 105 | 16 | 9 | 12 | 6 |
| 50 | 1-25 | 165 | 190 | 280 | 120 | 18 | 9 | 13 | 7 |
| 65 | 1-25 | 165 | 210 | 310 | 136 | 22 | 12 | 17 | 9 |
| 80 | 1-25 | 200 | 245 | 370 | 155 | 36 | 17 | 27 | 13 |
| 100 | 1-25 | 250 | 278 | 410 | 175 | 46 | 25 | 33 | 17 |
| 125 | 1-25 | 310 | 340 | 465 | 210 | 74 | 41 | 48 | 25 |
| 150 | 1-16 | 375 | 400 | 560 | 240 | 106 | 74 | 75 | 43 |
| 200 | 1-10 | 500 | 480 | 690 | 295 | 159 | - | 119 | - |
| 250 | 1-6 | 625 | 570 | 865 | 380 | 213 | - | 161 | - |
| 300 | 1 | 750 | 720 | 1020 | 445 | 279 | - | 212 | - |

| Valve size (PVE) M&A | PN (PSI) | A | B | C | E | Weight Manual valves (lbs) | | Weight Automatic valves (lbs) | |
|---|---|---|---|---|---|---|---|---|---|
| | | | | | | FE | AL | FE | AL |
| 1 | 15-365 | 6.5 | 5.0 | 10.1 | 3.4 | 25 | 16 | 18 | 9 |
| 1.25 | 15-365 | 6.5 | 5.5 | 10.2 | 3.5 | 31 | 20 | 22 | 11 |
| 1.5 | 15-365 | 6.5 | 7.1 | 10.4 | 4.1 | 36 | 20 | 27 | 14 |
| 2 | 15-365 | 6.5 | 7.5 | 11 | 4.7 | 40 | 20 | 29 | 16 |
| 2.5 | 15-365 | 6.5 | 8.3 | 12.2 | 5.4 | 49 | 27 | 38 | 20 |
| 3 | 15-365 | 8 | 9.6 | 14.6 | 6.1 | 80 | 38 | 60 | 29 |
| 4 | 15-365 | 10 | 10.9 | 16.1 | 6.9 | 102 | 55 | 73 | 38 |
| 5 | 15-365 | 12.2 | 13.4 | 18.3 | 8.3 | 163 | 91 | 106 | 55 |
| 6 | 15-240 | 14.8 | 15.7 | 22 | 9.4 | 234 | 163 | 166 | 95 |
| 8 | 15-150 | 19.7 | 18.9 | 27.2 | 11.6 | 351 | - | 263 | - |
| 10 | 15-75 | 24.6 | 22.4 | 34.1 | 15 | 470 | - | 355 | - |
| 12 | 15 | 29.5 | 28.3 | 40.2 | 17.5 | 615 | - | 468 | - |

# How to order

| 1. | 2. | 3. | 4. | 5. | 6. | 7. | 8. | 9. | 10. | 11. | 12. |
|---|---|---|---|---|---|---|---|---|---|---|---|
| PVE | 300 | A | 10 | - | 2 | 0 | 3 | L | R2Z3 | , | SBRT |

| 1. | Product type |
|---|---|
| PV | Open |
| PVE | Enclosed |
| PVE/S | Enclosed /sealed |
| PVS | Sealed |

| 2. | Product size DN |
|---|---|
| 25..600 | Conical mark with directly with conical reduction Example 50-40 |

| 3. | Actuator | | | | | | | | | | | | | | | |
|---|---|---|---|---|---|---|---|---|---|---|---|---|---|---|---|---|
| AKU1C | | | | | | | | EB | | | | H | | MG | |
| Pneumatic | | | | | | | | Electric | | | | Hydraulic | | Manual | |
| Cylinder | | Manual override | | Positioner | | Options | | Type | | Voltage range | | Type | | Type | |
| A | Pneumatic cylinder | BLANK | NONE | BLANK | NONE | BLANK | NONE | E | Electric On-OffAUMA Norm | BLANK | 400V/50hz | H | Hydraulic | M | Manual handwheel |
| A1S | Pneumatic with stainless piston rod, tie rods and painted cylinder | B | Manual override | K | Positioner Neles ND9000 series | U1C | With pneumatic spring FAIL CLOSE | EP | Electric On-Off with feedback unit EWG 01.1, AUMA | B | 380V/50hz | HA | Intergated Solenoid valve 24 VDC | MG | Manual with bevel gear |
| A2S | Pneumatic "Stainless" no painting | | | KF | With integrated (Festo DFPI) positioner a) | U1O | With pneumatic spring FAIL OPEN | ES | Electric On-Off AUMA-Matic | C | 440V/50hz | HB | Intergated Solenoid valve 110VAC | MCW | Chainwheel |
| | | | | KL | Standard Positioner with special auxliaries or other brand than Flowrox Selected Standard | U2C | With pneumatic spring (Pressure switch) FAIL CLOSE c) | EO | Electric On-Off with positioner, Aumatic | D | 525V/50hz | HC | Intergated Solenoid valve 230VAC | | |
| | | | | | | U2O | With pneumatic spring (Pressure switch) FAIL OPEN c) | EL | Electric (Other) | E | 460V/60hz | HP | Hydraulic positioner | | |
| | | | | | | VC | With mechanical spring FAIL CLOSE | | | N | Other | HL | Other | | |
| | | | | | | VO | With mechanical spring FAIL OPEN | | | | | | | | |

| 4. | Pressure class (PN)* |
|---|---|
| 1 | 1bar |
| 6 | 6bar |
| 10 | 10bar |
| 16 | 16bar |
| 7 | ANSI 300 |
| 2 | AISI 316 |
| 40 | 40bar |
| 64 | 64bar |
| 100 | 100bar |

| 5. | Flange drilling** |
|---|---|
| 2 | DIN PN 10 |
| 3 | DIN PN 16 |
| 4 | DIN PN 25 |
| 5 | DIN PN 40 |
| 6 | ANSI 150 |
| 7 | ANSI 300 |
| 8 | BS TABLE D |
| 9A | AS TABLE D |
| 9B | AS TABLE E |
| 9C | JIS 10 |
| 9D | JIS 16 |
| 9 | OTHER |

| 6. | Body material* |
|---|---|
| 0 | Cast Iron / Fe |
| 2 | AISI 316 |
| 3 | Aluminium |
| 4 | Other |
| 5 | Polyurethane / polyamide |

| 7. | Flange type |
|---|---|
| | Type 1<br>Type 3<br>Type 4<br>Determined by the valve Flowrox |

| 12. | Sleeve material |
|---|---|
| SBRT | Styrene butadiene |
| EPDM | Ethylene propylene |
| NR | Natural rubber |
| NBR | Nitrile |
| CSM | Hypalon |
| EPDMB | Green liqour sleeve |
| CR | Chloroprene |
| IIR | Butyl |
| NRF | Foodstuff natural rubber |
| NBRF | Foodstuff nitrile |
| HNBR | Hydrogenated nitrile |
| FMP | Fluorine rubber |
| **Additional features:*** | |
| /M | Flowrox SensoMate sleeve |
| /PU | PU-coating inside the sleeve |
| /VAC | Vacuum sleeve |

| 10. | Auxiliaries | | | |
|---|---|---|---|---|
| | Description | Extra info | Applicable actuator | |
| B | Pressure Booster in air supply | Pressure booster determined by Flowrox, used to increase the supply air pressure to secure enough force for pneumatic cylinder. | PNEUMATIC | * |
| F | Filter Regulator + gauge | Filter Regulator + Gauge<br>Flowrox selected model. | PNEUMATIC | * |
| F1 | Filter Regulator + gauge<br>(stainless steel AISI 316) | Filter Regulator + Gauge<br>Flowrox selected model.<br>FESTO PCRP G1/4 & G1/2 | PNEUMATIC | * |
| F5 | Filter Regulator OR Filter Regulator+ gauge | Filter Regulator OR Filter Regulator+ gauge (Non-standard) | PNEUMATIC | |
| H | Hydraulic Handpump (For Hydraulic only) | Manual hydraulic handpump for hydraulic actuators H only. | HYDRAULIC | * |
| J1 | Junction box small (Flowrox Standard) | Junction box small, for limit switches or solenoid valve, IP66, plastic, 2 pcs M12x1.5 and 1 pc M20x1.5, pre-wired. | ANY | * |
| J2 | Junction box large (Flowrox Standard) | Junction box large, for limit switches and solenoid valve, IP66, plastic, 4 pcs M12x1.5 and 1 pc M20x1.5, pre-wired. | ANY | * |
| J4 | Junction Box (Non-Standard) | Junction box out of Flowrox standard scope specification clarified on the proposal and under valve serial number. | ANY | |
| P1 | Stainless steel fittings + Corrosion resitant tubing | High temperature & corrosion resistance | PNEUMATIC | |
| P2 | AISI 316 Fitting and piping | Stainless steel fitting and piping | PNEUMATIC | |
| Q | Quick exhaust valve | Quick exhaust valve to maximize the speed of cylinder. | PNEUMATIC | * |
| R | Readiness for ind. Limit switches | Readiness for d18mm inductive limit switches. | ANY | * |
| R1 | AC/DC (18mm cylindrical switch)<br>(Flowrox Standard) | AC/DC,2-wire type,(24…240VAC / 24…240VDC)<br>Flowrox selected model | ANY | * |
| R2 | DC, NPN (18mm cylindrical switch)<br>(Flowrox Standard) | DC,3-wire type, PNP (12…24V)<br>Flowrox selected model | ANY | * |
| R3 | DC, NPN (18mm cylindrical switch)<br>(Flowrox Standard) | DC,3-wire type, NPN (12…24V)<br>Flowrox selected model | ANY | * |
| R5 | Limit switch<br>(Non-Standard) | Limit switch out of Flowrox standard scope specification clarified on the proposal and under valve serial number. | ANY | |
| S | Magnetic limit switches<br>(Flowrox Standard) | Magnetic limit switches, attached to aluminium pneumatic cylinder actuators. Cylinder fitted with magnetic piston. | PNEUMATIC | * |
| S5 | Magnetic limit switches<br>(Non-Standard) | Magnetic limit switches, attached to aluminium pneumatic cylinder actuators. Cylinder fitted with magnetic piston. | PNEUMATIC | |
| T | Mechan. Limit switches<br>(Flowrox Standard) | Mechanical limit switches<br>Flowrox selected model | ANY | * |
| T5 | Mechan. Limit switches<br>(Non-Standard) | Mechanical limit switches (Non-standard)<br>Consult with Flowrox | ANY | |
| Z1 | Solenoid valve, 24VDC, Monostable<br>(Flowrox Standard) | Solenoid valve 24 VDC (for pneumatic actuator) with necessary tubing Flowrox selected model, monostable (Single coil). | PNEUMATIC | * |
| Z1B | Solenoid valve, 24VDC, Bistable<br>(Flowrox Standard) | Solenoid valve 24 VDC (for pneumatic actuator) with necessary tubing Flowrox selected model, Bistable (Double coil). | PNEUMATIC | * |
| Z2 | Solenoid valve, 230V, 50/60Hz, Monostable<br>(Flowrox Standard) | Solenoid valve 230V - 50/60Hz (for pneumatic actuator) with necessary tubing Flowrox selected model, monostable (Single coil). | PNEUMATIC | * |
| Z2B | Solenoid valve, 230V, 50/60H, Bistable<br>(Flowrox Standard) | Solenoid valve 230V - 50/60Hz (for pneumatic actuator) with necessary tubing Flowrox selected model, Bistable (Double coil). | PNEUMATIC | * |
| Z3 | Solenoid valve, 110V, 50/60Hz, Monostable<br>(Flowrox Standard) | Solenoid valve 110V, 50/60Hz (for pneumatic actuator) with necessary tubing Flowrox selected model, monostable (Single coil). | PNEUMATIC | * |
| Z3B | Solenoid valve, 110V, 50/60Hz,Bistable<br>(Flowrox Standard) | Solenoid valve 110V, 50/60Hz (for pneumatic actuator) with necessary tubing Flowrox selected model Bistable (Double coil). | PNEUMATIC | * |
| Z5 | Solenoid valve, 24VDC, Monostable<br>(Non-Standard) | 24 VDC monostable (Single coil) solenoid valve out of Flowrox standard scope specification clarified on the proposal and under valve serial number. | PNEUMATIC | |
| Z5B | Solenoid valve, 24VDC, Bistable<br>(Non-Standard) | 24 VDC Bistable (Double coil) solenoid valve out of Flowrox standard scope. To be specified on the proposal and under valve serial number. | PNEUMATIC | |
| Z6 | Solenoid valve, 230V, 50/60Hz, Monostable<br>(Non-Standard) | 230V 50/60Hz monostable (Single coil) solenoid valve out of Flowrox standard scope. To be specified on the proposal and under valve serial number. | PNEUMATIC | |
| Z6B | Solenoid valve, 230V, 50/60H, Bistable<br>(Non-Standard) | 230V 50/60Hz Bistable (Double coil) solenoid valve out of Flowrox standard scope. To be specified on the proposal and under valve serial number. | PNEUMATIC | |
| Z7 | Solenoid valve, 110V, 50/60Hz, Monostable<br>(Non-Standard) | 110V 50/60Hz monostable (Single coil) solenoid valve out of Flowrox standard scope. To be specified on the proposal and under valve serial number. | PNEUMATIC | |
| Z7B | Solenoid valve, 110V, 50/60Hz,Bistable<br>(Non-Standard) | 110V 50/60Hz Bistable (Double coil) solenoid valve out of Flowrox standard scope. To be specified on the proposal and under valve serial number. | PNEUMATIC | |
| X | Must be specified | Additional auxiliary equipment not listed. | ANY | |

* Flowrox standard options

rotork®
Controls

## Introducing the new generation of intelligent valve control.

For over 50 years Rotork has used innovation in designing reliable, flexible and robust valve actuators and control systems. Continuing our ethos of evolving design, the 3rd generation IQ multi-turn actuator is now available. Reliability standards have been set even higher, it is simpler to commission and use and is unrivalled in its ability to provide valve and process control operational data.

### Key benefits of the 3rd generation IQ

- Valve position monitoring during power loss through simple and robust Rotork absolute encoder
- Large information-rich backlit display
- Advanced dual stacked display presents valve and process data for asset management and data analysis
- In the event of power failure actuator display and remote contacts are maintained
- Toughened glass screen plus optional environmental shield
- Outstanding environmental protection
- Non-intrusive setting – no cover removal required using secure *Bluetooth*® connection
- Enhanced reliability through solid state controls; reduced internal wiring; simplified torque sensor
- Detachable thrust bases across the entire range
- Advanced realtime status reporting
- Configurable datalogger functionality, including service alarms
- Plug & socket option available

# IQ Range

**3rd Generation**
**Intelligent Electric Actuator**

IQ3

**Redefining** Flow Control

rotork®
Controls


## Outstanding reliability

Valve operation must be reliable. Rotork IQ actuators are designed to meet the toughest applications and engineered for a lifetime of uninterrupted service. Built on the Rotork drive train, proven for over 40 years, 3rd generation IQ actuators feature numerous enhancements including:

- Advanced absolute position measurement
- Simplified control components
- Increased thrust base integrity; separable across all sizes
- High immunity from spurious signals
- Configurable motor drive "enable" input which stops the actuator operating unless a signal is applied
- Casing material selection and coatings have been designed for improved corrosion protection

Reliability of equipment depends on the protection provided by its enclosure. IQ retains the Rotork developed double-sealed, non-breathing, non-intrusive enclosure proven to maximise operational reliability. Regardless of whether the actuator is in a hazardous location or not, the fully sealed enclosure provides the highest reliability.

## Asset management

With an advanced dual stacked display, position, torque, status and configuration data is clear and immediate. In addition the valve, actuator and process data is available on screen or in the control room. Valve stroke torque/thrust graphs, duty trend logs, vibration levels and valve & actuator manufacturing data can be extracted by the user and stored as the basis for planned maintenance and operational activities, process performance characteristics and comparison.

Commissioning and configuring 3rd generation IQ actuators is faster and simpler than ever. In addition to a new and intuitive user interface, entire operations can now be carried out in moments and datalogger data downloaded using the supplied Rotork *Bluetooth*® Setting Tool Pro.

## Technological Advances

### Position

Reliable valve position sensing is critical. Using the latest technology and after years of testing, the patented Rotork IQ absolute encoder is contactless, has only four active parts, can measure up to 8,000 output turns and has redundancy and self checking. Unlike existing absolute encoder designs, this technological breakthrough increases position sensing reliability while providing zero-power position measurement.

### Display

The dual stacked display allows large segment character position displays down to -50 °C while the matrix display provides detailed setting, status and diagnostic multilingual screens. Overall the display is 30% bigger, is backlit to

provide excellent contrast even in the brightest ambient light conditions and is protected by a toughened glass window. An optional protective clip-in cover is available where high UV levels or abrasive environments are present.

### Torque

Now enhanced to provide increased integrity and performance, torque sensing is simple, accurate with high resolution and extremely reliable over the life of the actuator. Unlike other systems employed, the IQ system of torque measurement has the advantage of being independent of voltage and temperature variations.

### Control

Control elements such as main control and network interface cards, like those used with fieldbus systems, are connected using an internal bus system based on CAN, reducing wiring and connections and increasing reliability.

### Indication power

With the absolute encoder, a battery is not required for position sensing and tracking. As all configuration and datalogger data is stored in non-volatile EEPROM memory, all settings are safe when no power is available. However, to maintain the display and ensure remote indication is kept updated, allow data logging and power off commissioning, an indication battery is included as standard. Reduced power consumption means the battery has an exceptionally long life and low-cost replacements are available from suppliers globally.

### Optimised for preventative maintenance

All IQ actuators incorporate a sophisticated datalogger, which can provide comprehensive data capture and analysis for planned maintenance and troubleshooting issues with valves and processes. They capture:

- Valve torque profiles
- Operational starts profiles
- Operational, vibration and temperature trend logs
- Event log

In addition, asset management data regarding the actuator and the valve is stored within the actuator and available for download. Specific asset management information includes:

- Running time
- Average torque
- Starts
- Life statistics

As part of the ongoing commitment to improving asset management and providing reliable data for optimised preventative maintenance, the 3rd generation IQ now includes configurable service / maintenance alarms.

The alarm parameters can be set in the assets section of the setup menus and include:

- Open torque levels
- Close torque levels
- Starts/Hr
- Total starts
- Total turns
- Service intervals

With 3rd generation IQ actuators this data can be viewed in realtime using the large dual stacked display. In addition, the data can be downloaded wirelessly with the Rotork *Bluetooth*® Setting Tool Pro or to a PC and analysed using the Rotork Insight2 software.

### Safe manual operation

In case of an emergency, power outage or failure of the control network, IQ actuators can be operated by hand. A manual clutch and handwheel allow an operator to disengage the motor and operate the valve independently, without risk of damage or injury.

Where the location requires it, the clutch can be padlocked into position to prevent accidental or unauthorised manual operation.

Manual movements of the valve are recorded and logged by the actuator. Position sensing in Rotork IQ actuators is highly reliable (power on or off) thanks to the unique robust and simple design of the absolute encoder.

### Network system connectivity

With the addition of an appropriate option card, the IQ actuator can be incorporated into a number of different fieldbus control systems. The IQ actuator can be utilised within the Rotork Pakscan control system, either wired or wirelessly, and the major open Fieldbus protocols including Profibus®, Foundation Fieldbus®, Modbus and HART®.

# rotork®
## Controls

### 1 Hand operation

Direct drive and geared handwheel sized for effective manual operation of the valve. Handwheel drive is independent of the motor drive and is selected with a lockable hand/auto lever for safe operation even when the motor is running.

Motor operation always has preference unless the hand/auto lever is purposely locked into 'hand drive'. Lost motion 'hammerblow' action is provided with both direct and geared handwheels.

### 2 Environmental sealing

The Rotork double-sealed terminal compartment results in the actuator enclosure being completely sealed, protecting the actuator from the environment for life. Using the supplied Rotork *Bluetooth*® Setting Tool Pro, no covers need to be removed for commissioning, adjusting, analysis or accessing the actuator data log.

### 3 Display

The advanced dual stacked display is significantly larger, clearer and has a wide viewing angle making it easily legible from a distance. In normal mode the LCD display indicates valve position and can operate from -50 °C up to 70 °C.

The matrix layer provides high resolution screens for setting menus, status, alarm and graphical data log screens such as valve torque profiles. Position indication lights (red, yellow and green) are duplicated each side of the display. All display elements are protected by a 13 mm toughened glass window with an optional shield for protection against abrasive media such as sand and UV light.

### 4 Local controls

Local open/close and lockable Local/Stop/Remote selectors are coupled magnetically to the designated switches and therefore do not penetrate the control cover. This further enhances the non-intrusive protection of the IQ.

### 5 Position control

The unique Rotork patented absolute position sensor is highly accurate and can measure up to 8,000 output turns as standard. With only four active parts it is very simple and robust, providing the most reliable position sensing regardless of the availability of electrical power. It also includes built-in redundancy and self-checking.

### 6 Proven drive train

The drive train and motor uses the proven basic design principals employed for over 40 years. Simple, reliable and robust, the components are oil bath lubricated (for life).

### 7 Separable bases

For all sizes the thrust and non-thrust base types are separate to the gearcase allowing easy installation. Should the actuator be removed, the base can be left on the valve to maintain its position. All bases conform to attachment standards ISO5210 or MSS SP 102.


IQ3
1
6
5
7

# rotork
## Controls

### Local diagnostics and setup

The large dual stacked, hi-resolution display, with positional characters that are 25 mm high, is unrivalled in visibility for all lighting and orientation conditions. Consisting of a static, high-contrast positional display and a fully configurable dot-matrix LCD behind, the IQ offers the easiest, user-friendly configuration and data analysis ever seen in the actuation world.

### Configurable Home-screens

With a mixture of the static and dot-matrix displays, there are now four configurable home-screens available to the user. The four screens reflect the parameters most commonly required to analyse operation at-a-glance:

- Positional information with input demand (digital and analogue)


Using the Rotork *Bluetooth*® Setting Tool Pro, each of these screens can be easily accessed with a press of a button. Alternatively you can select one of the four screens to be continually displayed in the setup menu.

### User friendly setup menus

A single press of a button on the Rotork *Bluetooth*® Setting Tool Pro takes you into the user-friendly setup menu. This menu has been designed and structured to reduce reliance on having a written manual to hand. With large, clear characters available in many languages, setup and configuration has never been so easy.

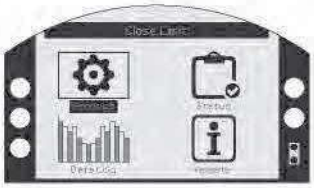


### Graphical datalogger

Greater amounts of data and analytical screens are now available in the datalogger and viewable locally. The datalogger screens are displayed on a 168 x 132 pixel dot-matrix display and can display anything from a torque vs position graph to statistical operational data.

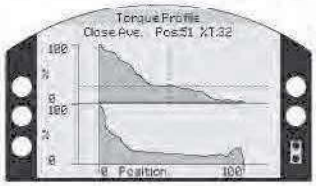


### Asset management

Not only can you store information relating to the actuator, but also the valve and gearbox. This includes data about build (class, size, ratio and tag numbers) along with service information (commission date, service date etc).

- Actuator data


- Valve data


- Gearbox data


- Service history

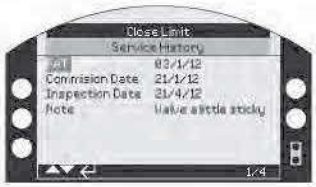

# IQ Range IQ3

## Intelligent Electric Actuator

**Features across the 3rd generation IQ range include:**

- Three-phase, direct current and single-phase variants
- Watertight and hazardous area enclosures
- Double-sealing
- Handwheels for emergency and ease-of-use operation
- Oil bath lubrication
- Advanced, multilingual display for status and setup
- Detailed datalogging
- Setting and data capture using the supplied Rotork *Bluetooth®* Setting Tool Pro
- InSight2 PC software for valve performance analysis
- Highly intuitive user interface
- Comprehensive control and flexibility

### IQ

IQ multi-turn 3-phase electric actuators designed for isolation or regulation duties (S2 & S3/Class A & B) of up to 60 starts per hour.

Direct torque output range from 34 Nm (25 lbf.ft) to 3,000 Nm (2,200 lbf.ft).

With the addition of second stage gearboxes, multi-turn output torque up to 43,000 Nm (31,715 lbf.ft) and quarter-turn up to 1,000,000 Nm (737,561 lbf.ft) are available.

### IQM

The modulating version of the IQ 3-phase electric actuator has a solid state reversing starter in place of the electro-mechanical contactors. They feature fast-response remote control circuits for rapid control. To optimise positional control, the solid state starter also adds an electronic motor 'brake' feature.

The 'hammer-blow' drive - for shifting infrequently used valves - is not included in this model. IQM is suitable for up to 1,200 starts per hour (S4/Class C).

With the addition of second stage gearboxes, IQM multi-turn output seating torque up to 3,600 Nm (2,655 lbf.ft) and quarter-turn up to 58,000 Nm (42,778 lbf.ft) are available.

### IQML

Benefiting from all the features of the IQM 3-phase electric actuator, the IQML has a linear output drive providing modulating thrust output of up to 150 kN (33,721 lbf).

### IQS

IQS actuators are single phase versions of IQ actuators. Torque range from 65 Nm (48 lbf.ft) to 450 Nm (332 lbf.ft).

With the addition of second stage gearboxes, single-phase multi-turn output torque up to 3,000 Nm (2,212 lbf.ft) and quarter-turn up to 208,500 Nm (153,781 lbf.ft) are available.

### IQD

IQD actuators are direct current powered versions of IQ actuators. Torque range 34 Nm (25 lbf.ft) to 305 Nm (225 lbf.ft). Voltage ranges available are 24 VDC, 48 VDC and 110 VDC (limited size/voltage availability – refer to PUB002-038 for details).

With the addition of second stage gearboxes, DC multi-turn output torque up to 1,500 Nm (1,106 lbf.ft) and quarter-turn up to 132,000 Nm (97,358 lbf.ft) are available.

### Special Designs

If you require an IQ actuator for duties that are not covered by our standard range, we are happy to discuss custom solutions.

# MISCOWATER – TW ASSOCIATES
# TERMS & CONDITIONS OF SALE

1. ACCEPTANCE

When the Buyer signifies acceptance of this quotation by submission of a Purchase Order or signed MISCOWATER Quotation, it shall become a binding contract when accepted and signed by an authorized signer of the Seller (MISCOWATER). Any changes or amendments to this proposal made by the Buyer must have MISCOWATER's approval in writing to become a part of this contract.

2. DELIVERY

Any shipment or delivery date recited represents our best estimate, but no liability, direct or indirect, is assumed by MISCOWATER for failure to ship or deliver on such dates. Unless otherwise directed, MISCOWATER shall have the right to make early or partial shipments and invoices covering the same to Buyer shall be due and payable in accordance with payment terms hereof. FOB shall be origin.

3. APPROVAL DRAWINGS

Any preliminary drawings or literature attached to our quotation are for illustration purposes only to show approximate arrangements. Specific drawings and submittal data will be furnished for approval as required after receipt and acceptance of the Buyer's order. Fabrication of products or equipment ordered will not begin until approval and direction to proceed is received in writing.

4. PAYMENT

Payment terms, upon credit approval, are Net 30 Days from the date of each invoice issued for each partial or final shipment. Flow down provisions are not accepted. Retention is not allowed. In the event any payment becomes past due, a charge of 1.5% will be assessed monthly.

5. TAXES AND BONDS

Taxes and bonds are NOT included in our pricing. Any applicable taxes or bonds will be added to the price and shown separately on each invoice.

6. CLAIMS AND BACKCHARGES

Buyer agrees to examine all materials immediately upon delivery and report to Seller (MISCOWATER) in writing any defects or shortages noted no later than 10 days following the date of receipt. The parties agree that if no such claim is made within said time, it shall be considered acceptable and in good order with respect to any defect or shortage which would have been revealed by such an inspection. In no event will MISCOWATER be responsible for any charge for modification, servicing, adjustment or for any other expense without written authorization from MISCOWATER prior to the performance of any such work.

7. SECURITY INTEREST & TITLE

Until all amounts due MISCOWATER have been paid in full, Seller shall retain a security interest in the product and have all rights of a secured party under the California Uniform Commercial Code, including the right to repossess the product or equipment without legal process.

8. WARRANTY

MISCOWATER warrants that the product furnished will be free from defects in material and workmanship when installed, operated and maintained under design conditions and in accordance with the manufacturer's written instructions. Warranties will expire (18) months after shipment or twelve (12) months after start-up, whichever occurs first. Expandable items such as filter or scrubber media are excluded from this warranty.

THIS WARRANTY, INCLUDING THE STATED REMEDIES, IS EXPRESSLY MADE BY SELLER AND ACCEPTED BY PURCHASER IN LIEU OF ALL OTHER WARRANTIES. SELLER MAKES NO WARRANTIES, EXPRESSED OR IMPLIED, OF MERCHANTABILITY, FITNESS OR OTHERWISE, WHICH EXTEND BEYOND THE DESCRIPTION OF THE PRODUCT HEREIN. SELLER WILL NOT BE LIABLE FOR ANY CONSEQUENTIAL, INCIDENTAL OR LIQUIDATED DAMAGES, AND IN NO EVENT SHALL BE LIABLE FOR ANY AMOUNT IN EXCESS OF THE PURCHASE PRICE OF THE PRODUCT PURCHASED ON THIS ORDER.

The foregoing is Seller's only obligation and Buyer's exclusive remedy for breach of warranty,

9. CANCELLATION

Should this order be cancelled, Buyer shall be obligated to pay for the level of work performed and products shipped. Work performed includes any engineering, calculations, preparation of submittals, drawings, and/or travel to job site in relation to this order.

10. FIELD WORK

Unless specifically stated on our quotation, installation, start-up service, supervision, operation and training are not included in our pricing of product.

11. COMPLETE AGREEMENT

These terms are intended by the parties as a final expression of their agreement and are intended also as a complete and exclusive statement of the terms of their agreement. No course or prior dealings between the parties and no usages of the trade shall be relevant to supplement or explain any term used in this agreement. This agreement supersedes all prior representations and agreements with respect to the matters set forth herein and may be modified only by a written agreement to and signed by each of the parties.

MISCOWATER: _____ By: _____

Title: _____ Title: _____

Date: _____ Date: _____

| Log # {Finance use only}: | |
|---|---|
| Batch # {Finance use only}: | |

# City of Santa Fe, New Mexico
## BUDGET AMENDMENT RESOLUTION (BAR)

| DEPARTMENT / DIVISION NAME | DATE |
|---|---|
| PUD/WWMD | 11/22/2022 |

| ITEM DESCRIPTION | ORG | OBJECT | PROJECT | INCREASE | DECREASE |
|---|---|---|---|---|---|
| EXPENDITURES | | | | {enter as positive #} | {enter as negative #} |
| Repair & Maintenance System Equipment | 5000367 | 520150 | WWM2050001 | 142,512 | |
| | | | | | |
| | | | | | |
| | | | | | |
| | | | | | |
| | | | | | |
| | | | | | |
| | | | | | |
| | | | | | |
| | | | | 142,512 | |
| REVENUES | | | | {enter as negative #} | {enter as positive #} |
| | | | | | |
| | | | | | |
| | | | | | |
| | | | | | |
| | | | | $ 142,512 | $ - |

**JUSTIFICATION:** *(use additional page if needed)*
*--Attach supporting documentation/memo*

Budget Increase from Cash Balance in WWMD Enterprise Fund to fund the contract/purchase with TW Associates MISCOWater

*{Complete section below if BAR results in a net change to ANY Fund}*

| Fund(s) Affected | Fund Balance Increase/(Decrease) |
|---|---|
| 500 | 142,512 |
| | |
| | |
| | |
| **TOTAL:** | **142,512** |

*{Use this form for Finance Committee/ City Council agenda items ONLY}*

**CITY COUNCIL APPROVAL**

City Council Approval Date

Agenda Item #:

Maya Martinez 11/22/2022
Prepared By *{print name}* Date

Michael Dozier (Nov 22, 2022 15:31 MST) 11/22/2022

Division Director Signature *{optional}* Date

SHANNON JONES (Nov 22, 2022 16:36 MST) 11/22/22

Department Director Signature Date

Andy Hopkins 11/23/22
Budget Officer Date

Finance Director *{≤ $5,000}* Date

City Manager *{≤ $60,000}* Date